YANMAR

PARTS CATALOG

0CR10-M57002EN

Last update Apr., 2019

Introduction

1. This parts catalog for 3YM20 is published as a revised edition.

	Date of issue	Remarks
First edition	May 2004	No need
1st revised edition	Jun., 2012	No need
2nd revised edition	Nov., 2018	

2. This parts catalog does not contain the technical data needed for maintenance service.

3. The illustrations used in this parts catalog have been simplified for clarity.

4. The contents of this parts catalog are subject to change without notice.

5. Be sure to use only Yanmar genuine parts for repairs. If imitation parts are used, it may cause engine defects.

Contents

0CR10-M57002

Fig. No.	Fig. Name
3YM20	
1.	CYLINDER BLOCK
2.	GEAR HOUSING
3.	FLYWHEEL HOUSING & OIL SUMP
4.	MOUNTING FOOT
5.	LABEL
6.	CYLINDER HEAD & BONNET
7.	AIR INTAKE SILENCER
8.	MIXING ELBOW
9.	CAMSHAFT & DRIVING GEAR
10.	CRANKSHAFT & PISTON
11.	DIPSTICK
12.	LUB. OIL SYSTEM
13.	COOLING PUMP(SEA WATER)(TO E/#E13045)
43.	(13A)COOLING PUMP(SEA WATER)(FROM E/#E13046)
14.	COOLING PUMP(FRESH WATER)
15.	COOLER(FRESH WATER)
16.	COOLING PIPE(SEA WATER)
17.	COOLING PIPE(FRESH WATER)
18.	BILGE PUMP(STANDARD)(OPTIONAL)(TO APR. 2004)
19.	BILGE PUMP(DELUXE)(OPTIONAL)(TO APR. 2004)
38.	(19A)BILGE PUMP(OPTIONAL)(FROM MAR. 2004)
20.	FUEL INJECTION PUMP
21.	GOVERNOR
22.	FUEL FEED PUMP
23.	FUEL INJECTION VALVE & FUEL INJECTION PIPE
24.	FUEL PIPE & FUEL FILTER
48.	(24A)WATER SEPARATOR
25.	FUEL TANK(OPTIONAL)
26.	BRACKET(CABLE)
27.	CLUTCH
28.	CLUTCH REMOTE CONTROL
29.	COUPLING(OPTIONAL)
30.	STARTER MOTOR
31.	GENERATOR(HITACHI/60A)(UP TO SEP. 2010)
32.	GENERATOR(HITACHI/80A)(UP TO E/#E11905)
41.	(32A)GENERATOR(VALEO)(FROM E/#E11906)
44.	(32B)GENERATOR(INNER PARTS)
33.	COVER(V-BELT)
34.	WIRE HARNESS & RELAY
45.	(34A)WIRE HARNESS (2-PANEL SPEC.)
46.	(34B)ELECTRIC PARTS
35.	INSTRUMENT PANEL(B-TYPE)(OPTIONAL)
36.	TOOL
37.	GASKET SET(OPTIONAL)
39.	INSTRUMENT PANEL(B-TYPE)(OPTIONAL)
40.	INSTRUMENT PANEL(MEDALLION)(FROM JAN. 2012)
42.	COMBINATION OF GENERATOR, WIRE HARNESS, AND PANEL
47.	PROPELLER NUT

Fig.1. CYLINDER BLOCK

(A)=3YM20 (D)=
(B)= (E)=
(C)= (F)=

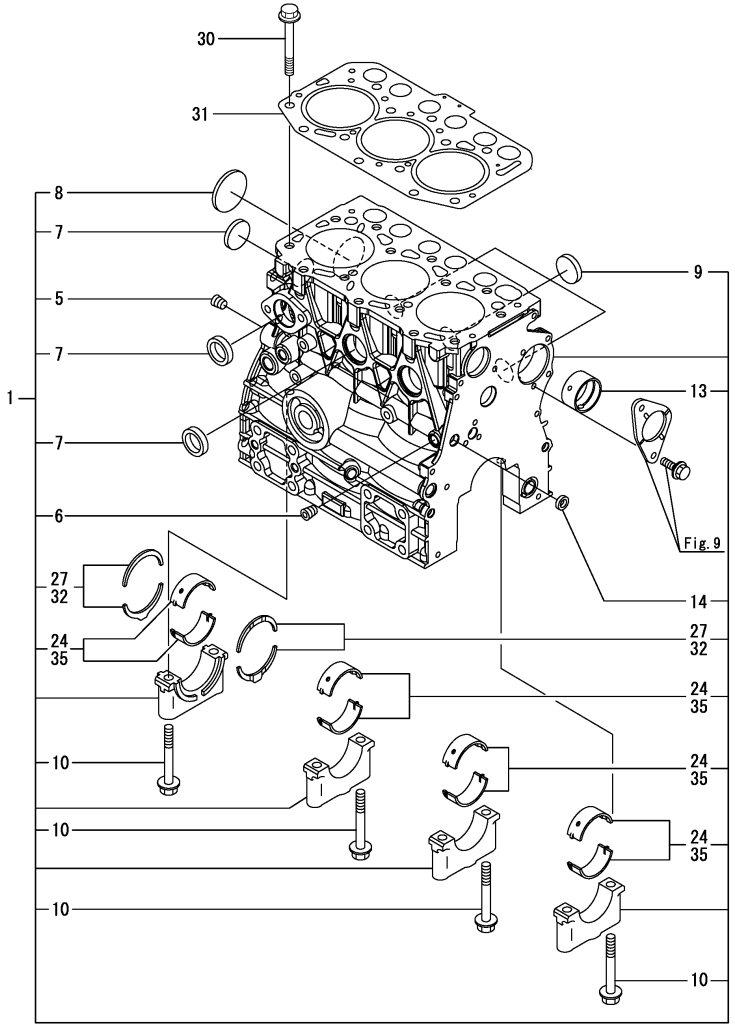

No.	Lev.	Parts No.	Description	Q'ty (A)	(B)	(C)	(D)	(E)	(F)	I	R
1	1	719515-01560	BLOCK ASSY, CYLINDER	1							
5	2	124160-01910	PLUG, PT1/4	1							
6	2	124060-01050	PLUG, PT1/8	1							
7	2	105311-01090	PLUG, CUP TYPE 30	4							
8	2	119623-01250	PLUG, DISH TYPE 45	1							
9	2	119285-01990	PLUG, CUP TYPE 25	3							
10	2	119620-02020	BOLT, METAL CAP	8							
13	2	119717-02410	BUSH, CAMSHAFT	1							
13-1	2	119717-02411	BUSH, CAMSHAFT	1						N	
	(A=*2006.06.)										
14	2	27241-120000	PLUG, 12	1							
24	2	719717-02900	BEARING ASSY, MAIN	4							1
24-1	2	719717-02901	BEARING ASSY, MAIN	4						N	1
	(A=*2006.06.)										
27	2	119717-02930	BEARING ASSY, THRUST	2							
30	1	119515-01200	BOLT, CYLINDER HEAD	14							
31	1	119515-01330	GASKET, HEAD	1							
31-1	1	119515-01331	GASKET, HEAD	1						N	
	(A=*2011.12.)										
32	1	119810-02940	BEARING, THRUST 0.25	2							2
32-1	1	119810-02941	BEARING, THRUST 0.25	2						N	2
	(A=*2011.12.)										
35	1	719717-02910	BEARING ASSY, MAIN	4							3
35-1	1	719717-02911	BEARING ASSY, MAIN	4						N	3
	(A=*2011.12.)										

Remarks
(1)Spare parts.
(2)Over-sized(O.S.=0.25) parts.
(3)Under-sized(U.S.=0.25) parts.

N:Old ◄Yes/No► New, Q:Old ◄No/Yes► New, R:Old ◄Yes/Yes► New, S:Old ◄No/No► New, W:Add, Z:Discontinued, F:Interchangeable by set, K:Q'ty Change

Copyright (C) 2018 YANMAR CO., LTD. All RightsReserved.

Fig.2. GEAR HOUSING

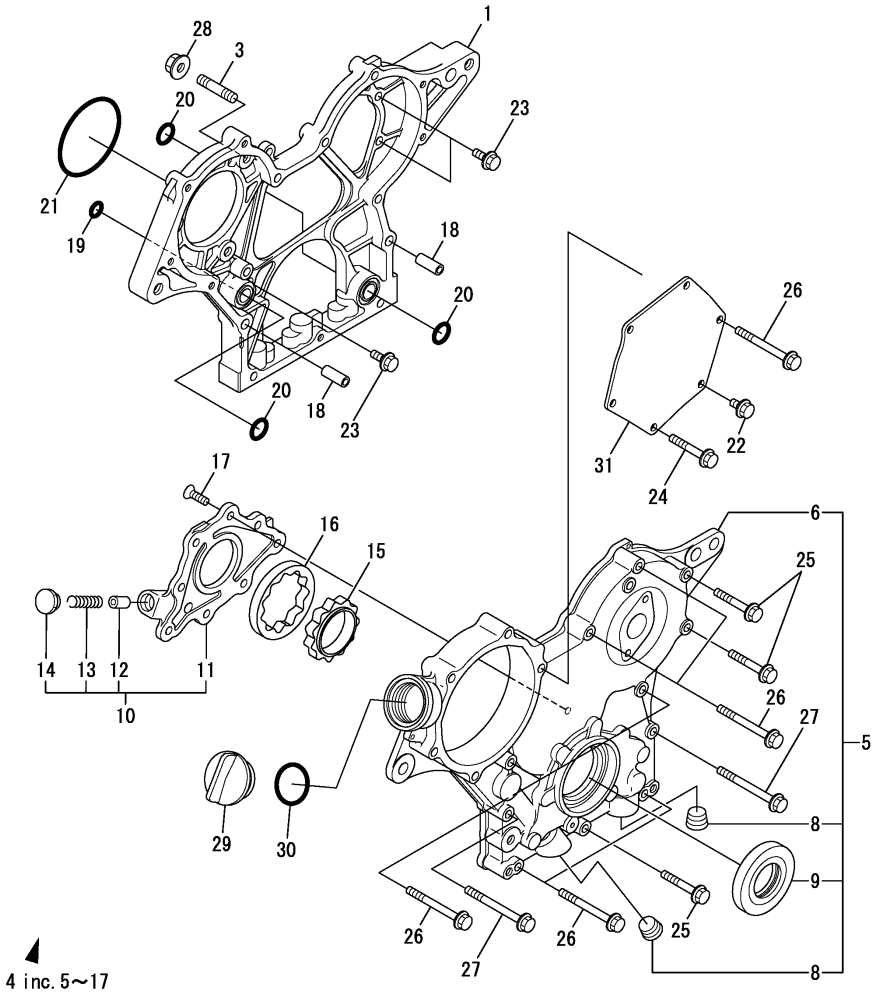

(A)=3YM20 (D)=
(B)= (E)=
(C)= (F)=

No.	Lev.	Parts No.	Description	Q'ty (A)	(B)	(C)	(D)	(E)	(F)	I	R
1	1	119717-01501	CASE, GEAR	1							
3	1	119717-01570	BOLT, STUD	3							
4	1	119717-01590	COVER ASSY,GEAR CASE	1							
5	2	719717-01500	COVER ASSY,GEAR CASE	1							
6	3	119717-01521	COVER, GEAR CASE	1							
8	4	23876-030000	PLUG, R03	2							
9	3	119620-01800	SEAL, OIL	1							
10	2	119717-32100	COVER ASSY	1							
11	3	119717-32080	COVER, PUMP	1							
12	3	129900-32130	VALVE, RELIEF	1							
13	3	129001-32320	SPRING	1							
14	3	129001-32330	PLUG	1							
15	2	119717-32110	ROTOR, INNER	1							
16	2	119717-32120	ROTOR, OUTER	1							
17	2	119802-32130	SCREW, M6X16	8							
18	1	119660-01911	PIPE, DOWEL 6X17	4							
19	1	119624-32040	O-RING, P12.0	1							
20	1	119717-32050	O-RING, P17.0	3							
21	1	121850-51960	O-RING	1							
22	1	26106-060122	BOLT, M6X 12 PLATED	1							
23	1	26106-060162	BOLT, M6X 16 PLATED	4							
24	1	26106-060402	BOLT, M6X 40 PLATED	4							
25	1	26106-060402	BOLT, M6X 40 PLATED	3							
26	1	26106-060602	BOLT, M6X 60 PLATED	7							
27	1	26106-060652	BOLT, M6X 65 PLATED	2							
28	1	26306-080002	NUT, M8	3							
29	1	124160-01751	CAP, FILLER	1							
30	1	24311-000320	O-RING, 1AP32.0	1							
31	1	119717-01750	COVER, PUMP	1							

N:Old $\xleftrightarrow[\text{No}]{\text{Yes}}$ New, Q:Old $\xleftrightarrow[\text{Yes}]{\text{No}}$ New, R:Old $\xleftrightarrow[\text{Yes}]{\text{Yes}}$ New, S:Old $\xleftrightarrow[\text{No}]{\text{No}}$ New, W:Add, Z:Discontinued, F:Interchangeable by set, K:Q'ty Change

Copyright (C) 2018 YANMAR CO., LTD. All RightsReserved.

Fig.3. FLYWHEEL HOUSING & OIL SUMP

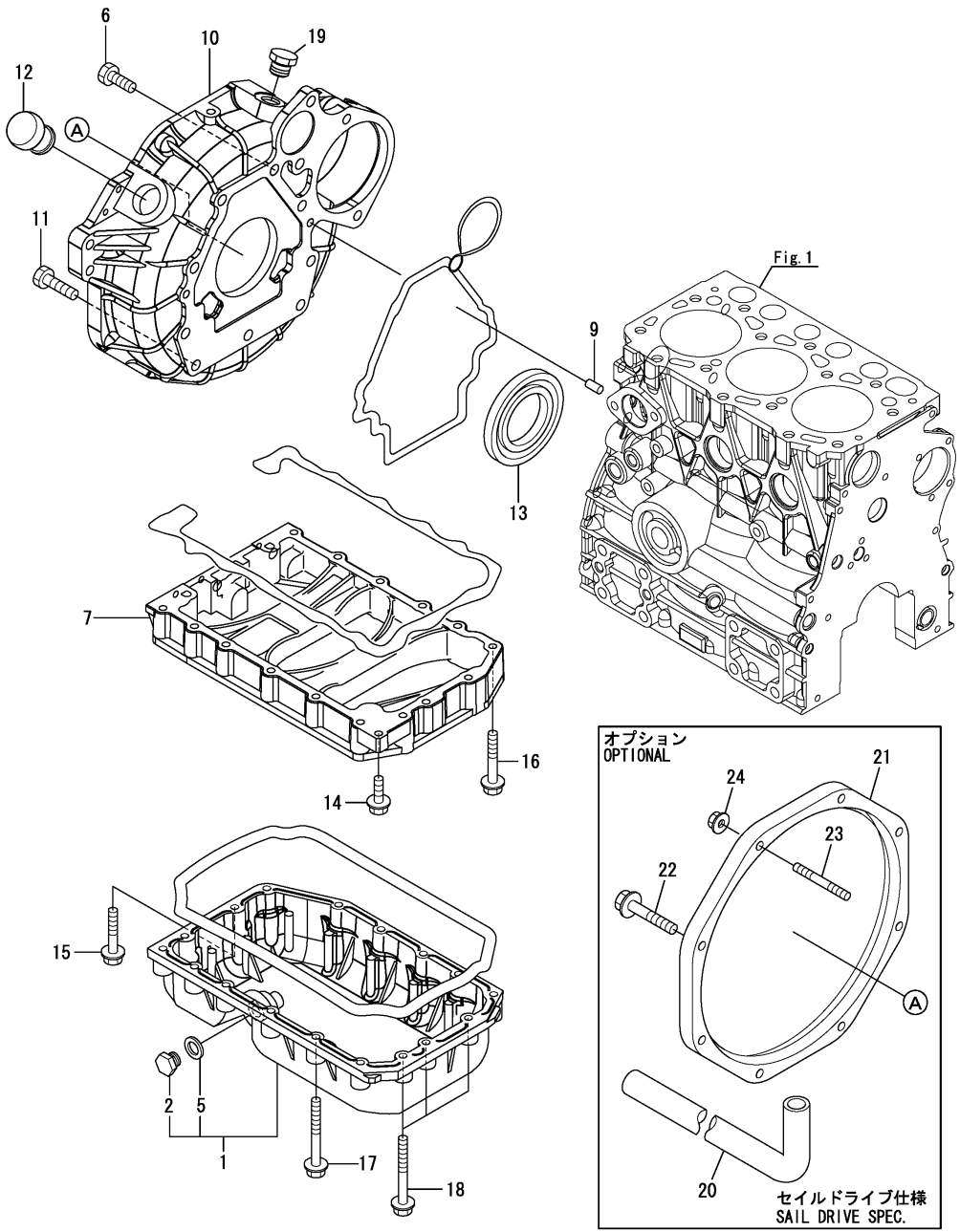

(A)=3YM20 (D)=
(B)= (E)=
(C)= (F)=

No.	Lev.	Parts No.	Description	Q'ty (A)	(B)	(C)	(D)	(E)	(F)	I	R
1	1	128890-01750	SUMP CMP, LUB OIL	1							
2	2	121450-42450	PLUG, M16	1							
5	2	124465-44950	GASKET, 16	1							
5-1	2	22190-160002	WASHER, SEAL 16	1						N	
	(A=*2008.07.)										
6	1	26206-100252	BOLT, M10X 25 PLATED	8							
7	1	119515-01720	SPACER, OIL-PAN	1							
9	1	129100-01580	PIN, PARALLEL 8X16	2							
10	1	128990-01650	HOUSING, FLYWHEEL	1							
11	1	121120-01620	BOLT, M10X28	3							
11-1	1	26206-100302	BOLT, M10X 30 PLATED	3						R	
	(A=*2009.08.)										
12	1	119620-01750	CAP	1							
13	1	124085-02220	SEAL, OIL	1							
14	1	26106-060252	BOLT, M6X 25 PLATED	1							
15	1	26106-060282	BOLT, M6X 28 PLATED	1							
16	1	26106-060452	BOLT, M6X 45 PLATED	1							
17	1	26106-060602	BOLT, M6X 60 PLATED	13							
18	1	26106-060602	BOLT, M6X 60 PLATED	3							
19	1	23887-180002	PLUG, 18	1							
20	1	128990-49030	PIPE, WATER	1							
21	1	128990-81150	SPACER, CLUTCH	1							
22	1	26106-080452	BOLT, M8X 45 PLATED	5							
23	1	26216-080452	STUD, M8X 45	3							
24	1	26366-080002	NUT, M8	3							

N:Old $\xleftarrow[\text{No}]{\text{Yes}}$ New, Q:Old $\xleftarrow[\text{Yes}]{\text{No}}$ New, R:Old $\xleftarrow[\text{Yes}]{\text{Yes}}$ New, S:Old $\xleftarrow[\text{No}]{\text{No}}$ New, W:Add, Z:Discontinued, F:Interchangeable by set, K:Q'ty Change

Copyright (C) 2018 YANMAR CO., LTD. All RightsReserved.

Fig.4. MOUNTING FOOT

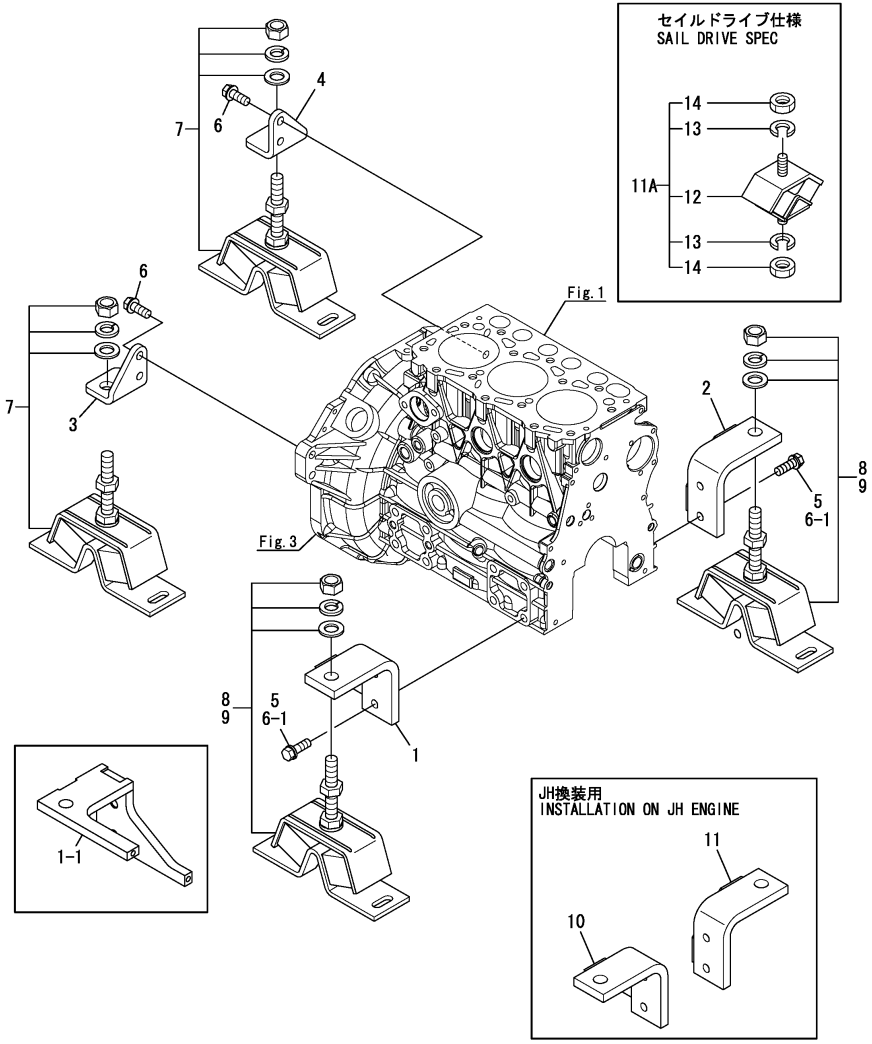

(A)=3YM20 (D)=
(B)= (E)=
(C)= (F)=

No.	Lev.	Parts No.	Description	Q'ty (A)	(B)	(C)	(D)	(E)	(F)	I	R
1	1	128990-08100	FOOT	1							
1-1	1	128890-08100	FOOT, ENGINE FRONT	1						S	2
	(A=E/#E13046)										
2	1	128990-08110	FOOT	1							
3	1	128377-08120	FOOT	1							
4	1	128377-08130	FOOT	1							
5	1	26013-100302	BOLT, M10X 30	4						Z	
	(A=E/#E13046)										
6	1	26106-100252	BOLT, M10X 25 PLATED	4							
6-1	1	26106-100252	BOLT, 10 X 25	8						K	
	(A=E/#E13046)										
7	1	128377-08340	MOUNT, FLEXIBLE 75	2							
7-1	1	128377-08341	MOUNTING, FLEXIBLE	2						R	
	(A=E/#E13624)										
8	1	128377-08350	MOUNT, FLEXIBLE 100	2							
8-1	1	128377-08351	MOUNT, FLEXIBLE	2						R	
	(A=E/#E13624)										
9	1	128377-08350	MOUNT, FLEXIBLE 100	2							1
9-1	1	128377-08351	MOUNT, FLEXIBLE	2						R	1
	(A=E/#E13624)										
10	1	128990-08140	BRACKET,FRONT A	1						W	
	(A=*2005.06.)										
11	1	128990-08150	BRACKET,FRONT B	1						W	
	(A=*2005.06.)										
11A	1	796420-08630	ABSORBE ASSY,SHOCK	1						W	
	(A=E/#E12730)										
12	2	196420-02310	RUBBER, ABSORBER 230	1						W	
	(A=E/#E12326)										
13	2	22217-120000	WASHER, SPRING 12	2						W	
	(A=E/#E12326)										
14	2	26716-120002	NUT, M12	2						W	
	(A=E/#E12326)										

Remarks
(1)Optional : Sail Drive specification.
(2)Fig.43 interchangeable by set.

N:Old $\xleftrightarrow[\text{No}]{\text{Yes}}$ New, Q:Old $\xleftrightarrow[\text{Yes}]{\text{No}}$ New, R:Old $\xleftrightarrow[\text{Yes}]{\text{Yes}}$ New, S:Old $\xleftrightarrow[\text{No}]{\text{No}}$ New, W:Add, Z:Discontinued, F:Interchangeable by set, K:Q'ty Change

Copyright (C) 2018 YANMAR CO., LTD. All RightsReserved.

Fig.5. LABEL

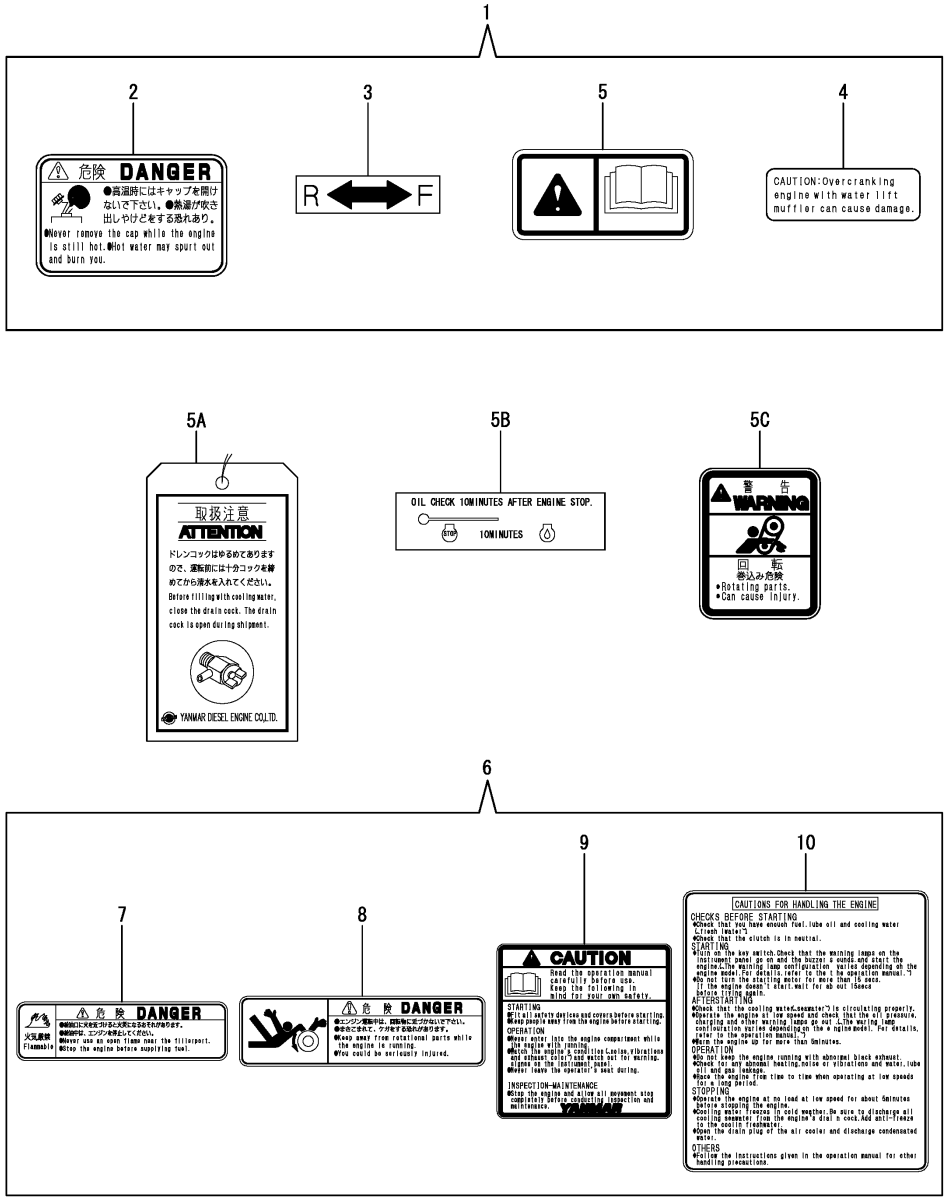

(A)=3YM20 (D)=
(B)= (E)=
(C)= (F)=

No.	Lev.	Parts No.	Description	Q'ty (A)	(B)	(C)	(D)	(E)	(F)	I	R
1	1	128990-07900	LABEL ASSY,CAUTION	1						W	
	(A=E/#E13624)										
2	2	128377-07260	LABEL, PRESSURE CAP	1							
2-1	2	128990-07270	LABEL, PRESSURE CAP	1						N	
	(A=E/#E13624)										
3	2	177088-02430	LABEL, FORWARD	1						W	
	(A=E/#E13624)										
4	2	128377-07150	LABEL, CAUTION	1							
5	2	196630-12980	LABEL, CAUTION	1							
5A	1	123682-07852	LABEL, CAUTION	1							
5B	1	128990-34900	LABEL,OIL CHECK	1						W	
	(A=E/#E13624)										
5C	1	128377-07350	LABEL, CAUTION	1						Z	
	(A=E/#E13624)										
6	1	128296-07190	LABEL,LOOSE PARTS	1							
7	2	128296-07400	LABEL, DANGER	2							
8	2	128296-07420	LABEL, DANGER	1							
9	2	128296-07450	LABEL, CAUTION	1							
10	2	128296-07460	LABEL, CAUTION	1							

N:Old $\overset{\text{Yes}}{\underset{\text{No}}{\leftrightarrows}}$ New, Q:Old $\overset{\text{No}}{\underset{\text{Yes}}{\leftrightarrows}}$ New, R:Old $\overset{\text{Yes}}{\underset{\text{Yes}}{\leftrightarrows}}$ New, S:Old $\overset{\text{No}}{\underset{\text{No}}{\leftrightarrows}}$ New, W:Add, Z:Discontinued, F:Interchangeable by set, K:Q'ty Change

Copyright (C) 2018 YANMAR CO., LTD. All RightsReserved.

Fig.6. CYLINDER HEAD & BONNET

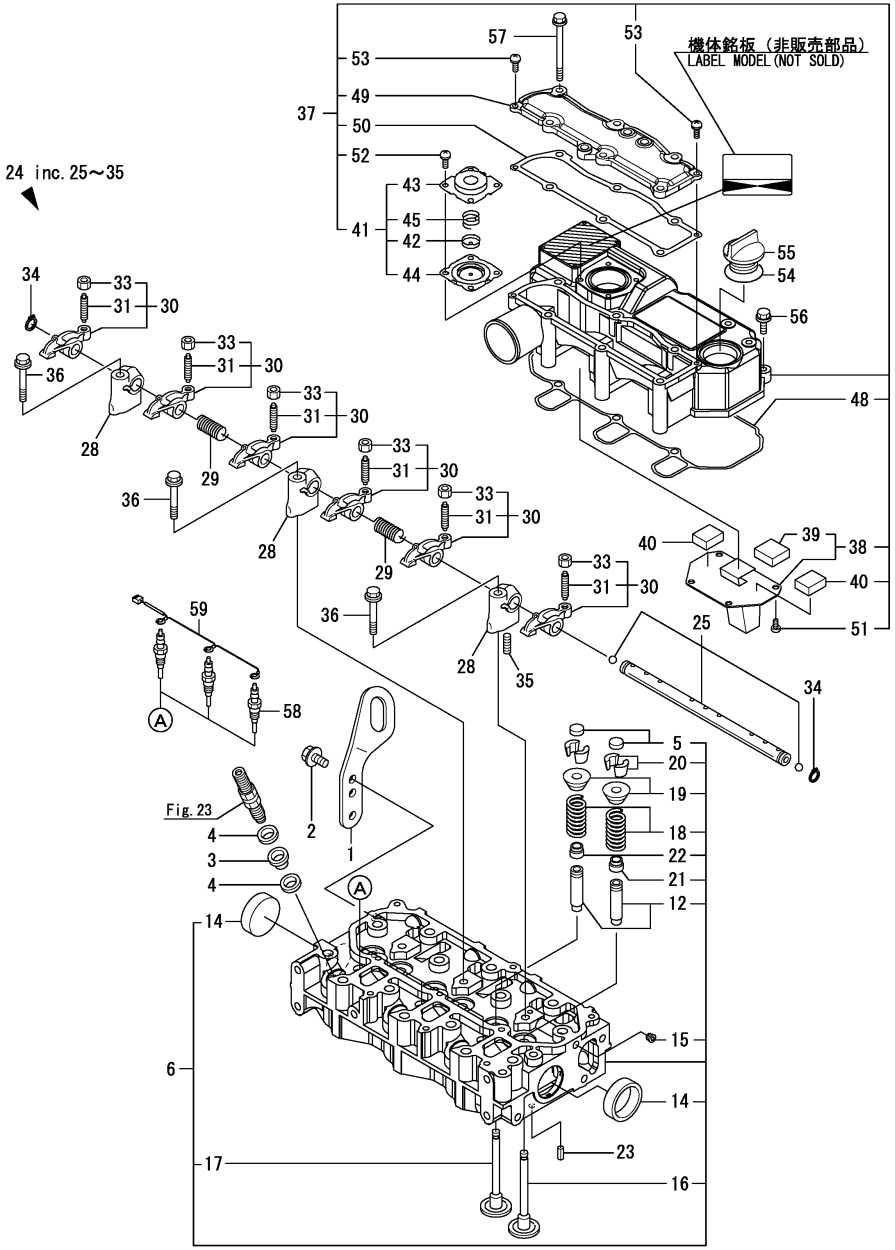

(A)=3YM20 (D)=
(B)= (E)=
(C)= (F)=

No.	Lev.	Parts No.	Description	Q'ty (A)	(B)	(C)	(D)	(E)	(F)	I	R
1	1	128990-07910	LIFTER	1							
2	1	26106-080142	BOLT, M8X 14 PLATED	2							
3	1	129901-11450	PROTECTOR, NOZZLE	3							
4	1	119600-11460	GASKET, NOZZLE	6							
5	1	105010-11490	CAP, VALVE	6							
6	1	119515-11750	HEAD ASSY, CYLINDER	1							
12	2	119515-11800	GUIDE, VALVE	6							1
14	2	119285-11990	PLUG, CUP TYPE 35	2							
15	2	23876-005000	PLUG, R005	1							
16	2	119515-11100	VALVE, SUCTION	3							
16-1	2	119515-11101	VALVE, SUCTION	3						N	
	(A=*2006.09.)										
17	2	119515-11110	VALVE, EXHAUST	3							
18	2	119717-11131	SPRING, VALVE	6							
19	2	129508-11180	RETAINER, SPRING	6							
20	2	119717-11190	COTTER, VALVE	12							
21	2	119717-11340	SEAL, VALVE STEM	3							
22	2	119717-11350	SEAL, VALVE STEM	3							
23	1	22351-060012	PIN, SPRING 6.0X12	2							
24	1	119515-11200	SUPPORT ASSY, ROCKER	1							
25	2	119515-11240	SHAFT ASSY, ROCKER	1							
28	2	119717-11260	SUPPORT, ROCKER ARM	3							
29	2	119515-11280	SPRING, ROCKER	2							
30	2	119717-11650	ARM ASSY, ROCKER	6							
31	3	129150-11230	SCREW, VALVE ADJUST	6							
33	3	129150-11750	NUT, M8	6							
34	2	22242-000120	RING, 12	2							
35	2	26979-050162	SCREW, M5X16	1							
36	1	26106-080402	BOLT, M8X 40 PLATED	3							
37	1	119515-11380	BONNET ASSY, HEAD	1							
38	2	119717-03031	PLATE, BAFFLE	1							
39	3	119717-03070	BAFFLE, BREATHER	1							
40	2	119717-03070	BAFFLE, BREATHER	2							
41	2	119802-03100	DIAPHRAGM ASSY	1							
42	3	119802-03110	PLATE, DIAPHRAGM	1							
43	3	119802-03121	COVER, DIAPHRAGM	1							
44	3	119802-03131	DIAPHRAGM	1							
45	3	119802-03141	SPRING, DIAPHRAGM	1							
48	2	119515-11310	GASKET, BONNET	1							
49	2	119515-11320	COVER, BONNET	1							
50	2	119515-11330	GASKET	1							
51	2	22857-500100	SCREW, 5X10	4							
52	2	22857-500100	SCREW, 5X10	4							
53	2	22857-500160	SCREW, 5X16	2							
54	1	24311-000320	O-RING, 1AP32.0	1							
55	1	124160-01751	CAP, FILLER	1							
56	1	26106-060202	BOLT, M6X 20 PLATED	3							
57	1	26106-060752	BOLT, M6X 75 PLATED	6							
58	1	119717-77800	PLUG, GLOW	3							
58-1	1	119717-77801	PLUG, GLOW	3						N	
	(A=*2012.03.)										

Remarks
(1)Spare parts.

N:Old $\xleftarrow[\text{No}]{\text{Yes}}$ New, Q:Old $\xleftarrow[\text{Yes}]{\text{No}}$ New, R:Old $\xleftarrow[\text{Yes}]{\text{Yes}}$ New, S:Old $\xleftarrow[\text{No}]{\text{No}}$ New, W:Add, Z:Discontinued, F:Interchangeable by set, K:Q'ty Change

++ CONTINUE ++

Copyright (C) 2018 YANMAR CO., LTD. All RightsReserved.

Fig.6. CYLINDER HEAD & BONNET

(A)=3YM20
(B)=
(C)=
(D)=
(E)=
(F)=

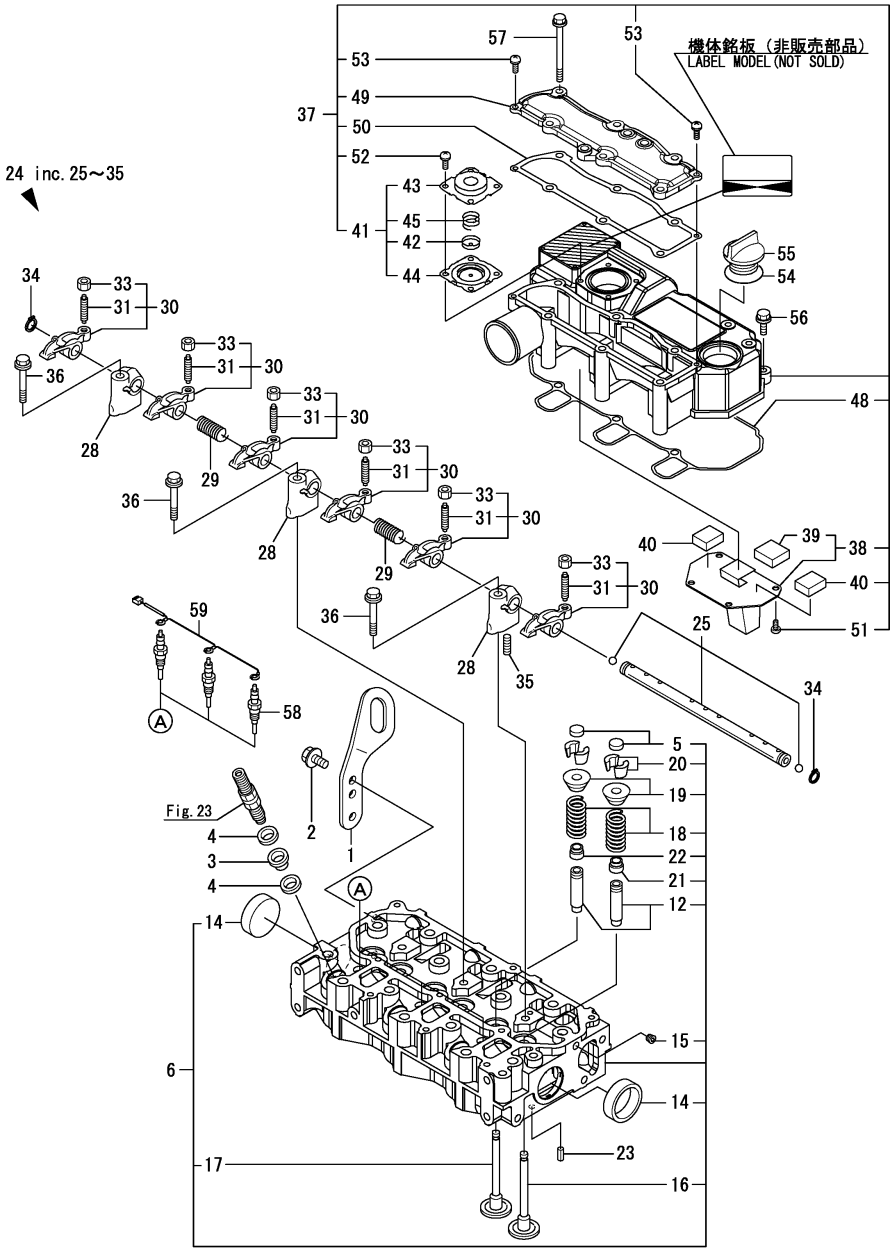

No.	Lev.	Parts No.	Description	Q'ty (A)	(B)	(C)	(D)	(E)	(F)	I	R
59	1	128990-77820	CONNECTOR, GLOW PLUG	1							

Remarks
(1)Spare parts.

N:Old ←Yes/No→ New, Q:Old ←No/Yes→ New, R:Old ←Yes/Yes→ New, S:Old ←No/No→ New, W:Add, Z:Discontinued, F:Interchangeable by set, K:Q'ty Change

Copyright (C) 2018 YANMAR CO., LTD. All RightsReserved.

Fig.7. AIR INTAKE SILENCER

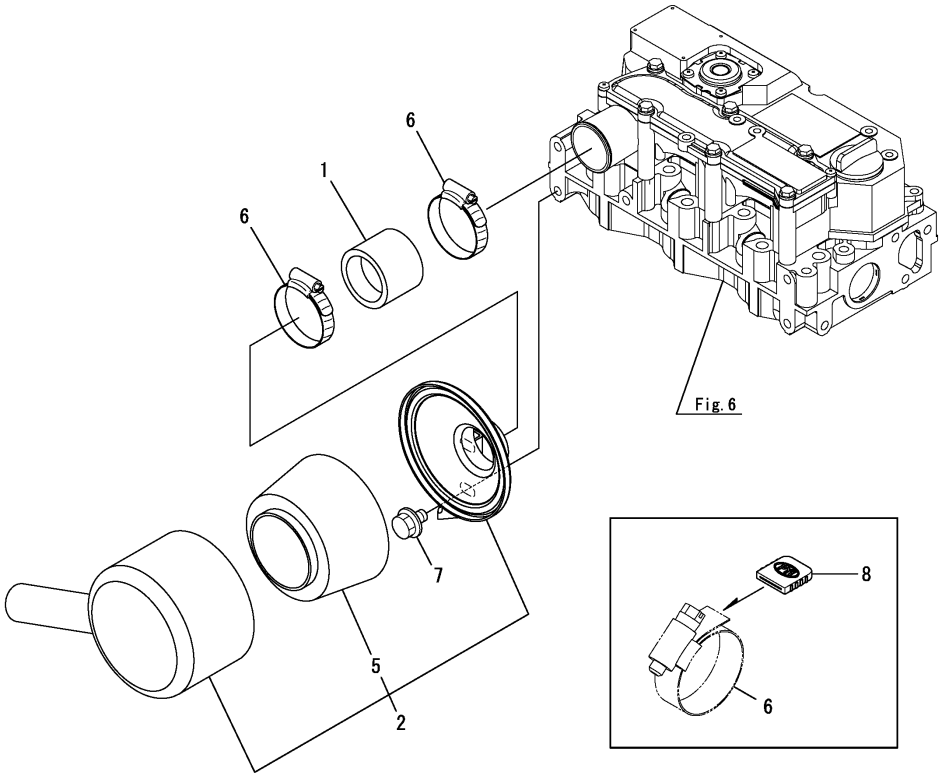

(A)=3YM20 (D)=
(B)= (E)=
(C)= (F)=

No.	Lev.	Parts No.	Description	Q'ty (A)	(B)	(C)	(D)	(E)	(F)	I	R
1	1	128990-12210	JOINT	1							
2	1	128990-12500	SILENCER ASSY	1							
5	2	128270-12540	ELEMENT	1							
6	1	23001-060000	CLAMP, HOSE 60	2							
6-1	1	23000-060000	CLAMP, 60	2						R	
	(A=*2004.06.)										
7	1	26106-080122	BOLT, M8X 12 PLATED	2							
8	1	129677-49950	PROTECTOR,HOSE CLAMP	2						W	
	(A=E/#E13982)										

N:Old ◄Yes/No► New, Q:Old ◄No/Yes► New, R:Old ◄Yes/Yes► New, S:Old ◄No/No► New, W:Add, Z:Discontinued, F:Interchangeable by set, K:Q'ty Change

Copyright (C) 2018 YANMAR CO., LTD. All RightsReserved.

Fig.8. MIXING ELBOW

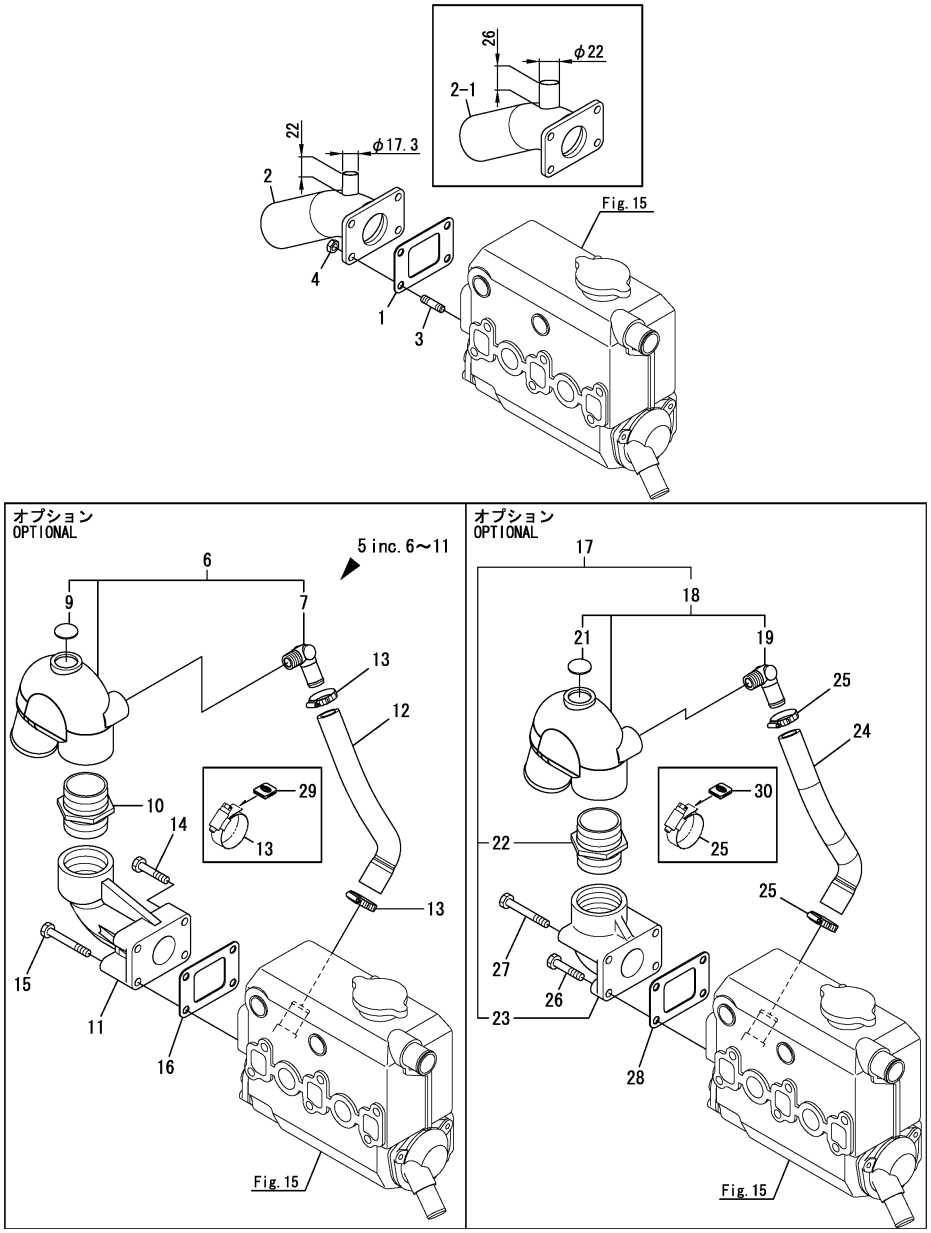

(A)=3YM20 (D)=
(B)= (E)=
(C)= (F)=

No.	Lev.	Parts No.	Description	Q'ty (A)	(B)	(C)	(D)	(E)	(F)	I	R
1	1	128370-13201	GASKET	1							
2	1	128397-13530	ELBOW	1							
2-1	1	128890-13530	ELBOW	1						S	1
	(A=E/#E10518)										
3	1	128170-13600	STUD, M8X31	4							
3-1	1	129670-13600	STUD	4						R	
	(A=E/#E13624)										
4	1	26703-080002	NUT, M8	4							
5	1	128370-13600	ELBOW ASSY, MIXING	1						W	
	(A=E/#E13624)										
5A	1	128890-13600	ELBOW ASSY,U-MIXING	1						W	2
	(A=*2018.10.)										
6	2	124070-13520	ELBOW	1							
6A	2	128890-13590	ELBOW ASSY,U-MIXING	1						W	2
	(A=*2018.10.)										
7	3	124070-13300	ELBOW, PT3/8	1							
9	3	27233-250000	PLUG, 25	1							
10	2	104214-13580	JOINT	1							
11	2	128370-13610	ELBOW	1							
12	1	128990-49040	PIPE, WATER	1							
13	1	23000-025000	CLAMP, 25	2							
14	1	26203-080402	BOLT, M8X 40 PLATED	2							
14-1	1	26203-080452	BOLT, 8 X 45	2						N	
	(A=*2018.10.)										
15	1	26203-080602	BOLT, M8X 60 PLATED	2							
15-1	1	26203-080652	BOLT, 8 X 65	2						N	
	(A=*2018.10.)										
16	1	128370-13201	GASKET	1							
17	1	128990-13510	ELBOW ASSY	1						W	
	(A=*2004.08.)										
18	2	128990-13520	ELBOW ASSY	1							
19	3	124070-13300	ELBOW, PT3/8	1							
21	3	27233-250000	PLUG, 25	1							
22	2	104214-13580	JOINT	1							
23	2	128990-13610	BEND, EXHAUST	1							
24	1	128990-49090	PIPE, WATER	1							
25	1	23000-025000	CLAMP, 25	2							
25-1	1	23000-028000	CLAMP, HOSE 28	2						N	
	(A=E/#E11906)										
26	1	26203-080302	BOLT, M8X 30 PLATED	2							
27	1	26203-080802	BOLT, M8X 80 PLATED	2							
28	1	128370-13201	GASKET	1							
29	1	129677-49950	PROTECTOR,HOSE CLAMP	2						W	
	(A=E/#E13982)										
30	1	129677-49950	PROTECTOR,HOSE CLAMP	2						W	
	(A=E/#E13982)										

Remarks
(1)No.2-1 & Fig.16 No.3-1 interchangeable by set.
(2)Starter side.

N:Old $\overset{\text{Yes}}{\underset{\text{No}}{\leftrightarrow}}$ New, Q:Old $\overset{\text{No}}{\underset{\text{Yes}}{\leftrightarrow}}$ New, R:Old $\overset{\text{Yes}}{\underset{\text{Yes}}{\leftrightarrow}}$ New, S:Old $\overset{\text{No}}{\underset{\text{No}}{\leftrightarrow}}$ New, W:Add, Z:Discontinued, F:Interchangeable by set, K:Q'ty Change

Copyright (C) 2018 YANMAR CO., LTD. All RightsReserved.

Fig.9. CAMSHAFT & DRIVING GEAR

(A)=3YM20 (D)=
(B)= (E)=
(C)= (F)=

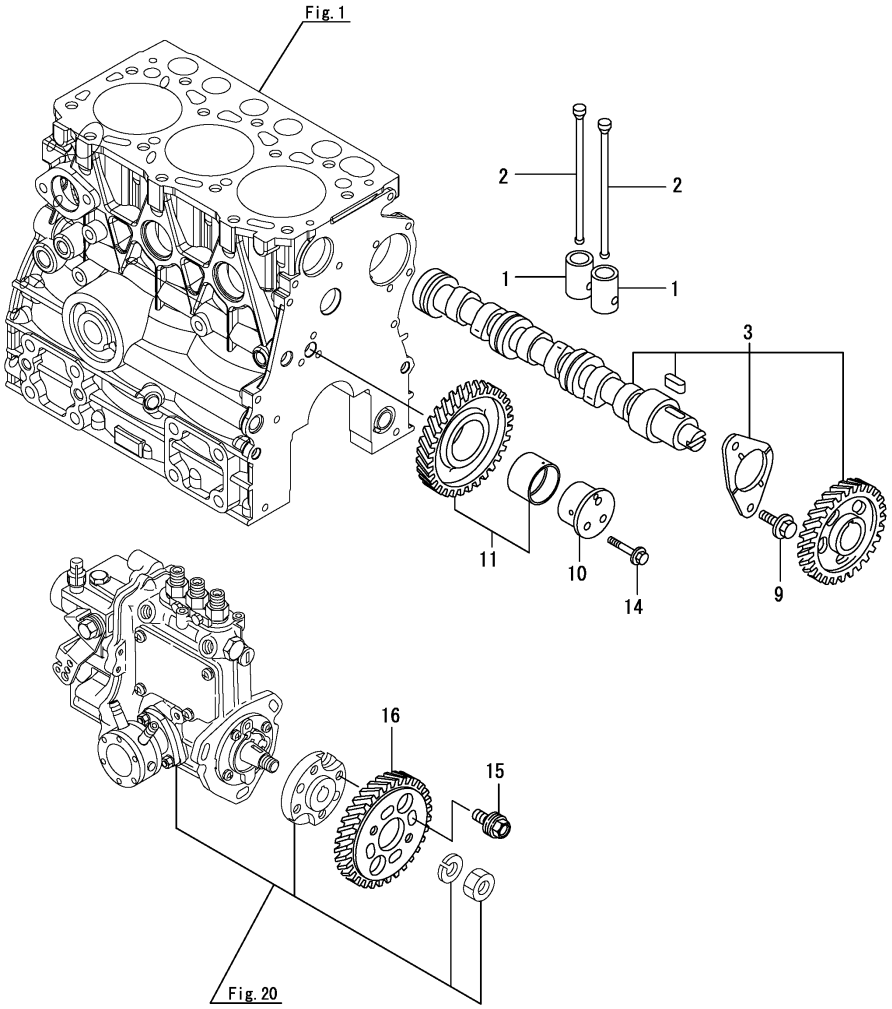

No.	Lev.	Parts No.	Description	Q'ty (A)	(B)	(C)	(D)	(E)	(F)	I	R
1	1	119620-14200	TAPPET	6							
2	1	119515-14400	PUSH-ROD	6							
3	1	119515-14580	CAMSHAFT ASSY	1							
3-1	1	119515-14581	CAMSHAFT ASSY	1						R	
	(A=*2006.06.)										
9	1	26106-060122	BOLT, M6X 12 PLATED	2							
10	1	119717-25050	SHAFT, IDLE	1							
11	1	119717-25100	GEAR ASSY, IDLE	1							
11-1	1	119717-25101	GEAR ASSY, IDLE	1						N	
	(A=*2006.06.)										
14	1	26106-060352	BOLT, M6X 35 PLATED	3							
15	1	129150-25301	BOLT	4							
16	1	119717-25930	GEAR, PUMP	1							

N:Old $\frac{\text{Yes}}{\text{No}}$ New, Q:Old $\frac{\text{No}}{\text{Yes}}$ New, R:Old $\frac{\text{Yes}}{\text{Yes}}$ New, S:Old $\frac{\text{No}}{\text{No}}$ New, W:Add, Z:Discontinued, F:Interchangeable by set, K:Q'ty Change

Copyright (C) 2018 YANMAR CO., LTD. All RightsReserved.

Fig.10. CRANKSHAFT & PISTON

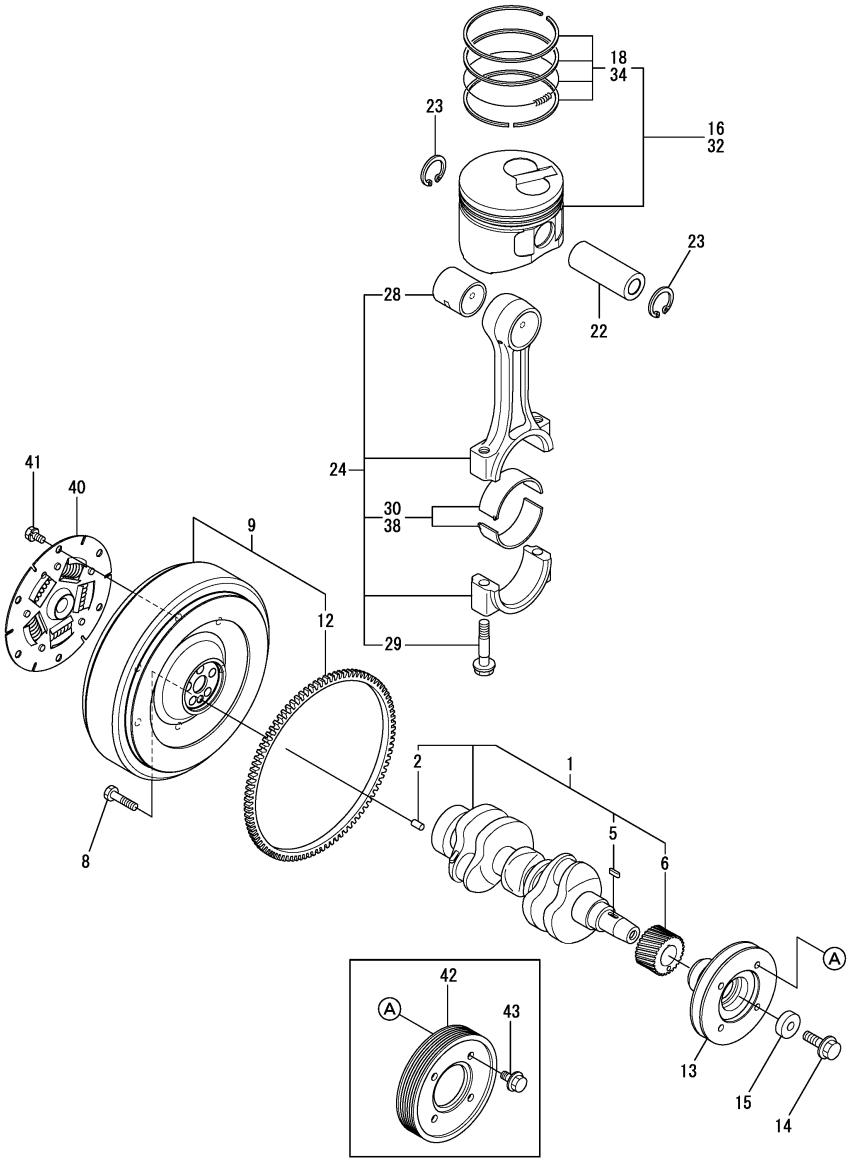

(A)=3YM20 (D)=
(B)= (E)=
(C)= (F)=

No.	Lev.	Parts No.	Description	Q'ty (A)	(B)	(C)	(D)	(E)	(F)	I	R
1	1	119515-21700	CRANKSHAFT ASSY	1							
2	2	129100-01580	PIN, PARALLEL 8X16	1							
5	2	22512-040120	KEY, 4X 12	1							
6	2	119717-21200	GEAR, CRANKSHAFT	1							
8	1	121111-21501	BOLT, FLYWHEEL	5							
9	1	128990-21590	FLYWHEEL ASSY	1							
12	2	124950-21600	GEAR, RING	1							
13	1	128990-21650	V-PULLEY	1							
14	1	119621-21680	BOLT, FLANGE 12X1.25	1							
14-1	1	119621-21681	BOLT, FLANGE 12X1.25	1						R	
	(A=*2009.07.)										
15	1	119620-21941	WASHER	1							
16	1	119515-22080	PISTON ASSY	3							
18	2	119515-22500	RING SET, PISTON	3							
22	1	119515-22300	PIN, PISTON	3							
23	1	22252-000220	RING, 22	6							
24	1	119515-23000	ROD ASSY, CONNECTING	3							
24-1	1	119515-23001	ROD ASSY, CONNECTING	3						N	
	(A=*2018.08.)										
28	2	119717-23910	BEARING, PISTON PIN	3							1
29	2	119717-23200	BOLT, CONNECTING ROD	6							
30	2	119515-23600	BEARING, CRANK PIN	3							
30-1	2	119515-23601	BEARING, CRANK PIN	3						N	
	(A=*2006.06.)										
32	1	119515-22900	PISTON ASSY, 0.25 OS	3							2
34	2	119515-22550	RING SET, 0.25 OS	3							2
38	1	119515-23610	BEARING ASSY, 0.25	3							3
38-1	1	119515-23611	BEARING ASSY, 0.25	3						N	3
	(A=*2006.06.)										
40	1	177070-03501	DISK, DAMPER D170	1							
41	1	26013-080142	BOLT, M8X 14	6							
42	1	128990-21670	PULLEY, CRANK 6PK	1						W	4
	(A=E/#E11906)										
42-1	1	128990-21671	PULLEY, CRANK 6PK	1						N	
	(A=E/#E13034)										
43	1	26106-080162	BOLT, M8X 16 PLATED	4						W	4
	(A=E/#E11906)										

Remarks
(1)Spare parts.
(2)Over-sized(O.S.=0.25) parts.
(3)Under-sized(U.S.=0.25) parts.
(4)Valeo generator specification.

N:Old $\frac{\text{Yes}}{\text{No}}$ New, Q:Old $\frac{\text{No}}{\text{Yes}}$ New, R:Old $\frac{\text{Yes}}{\text{Yes}}$ New, S:Old $\frac{\text{No}}{\text{No}}$ New, W:Add, Z:Discontinued, F:Interchangeable by set, K:Q'ty Change

Copyright (C) 2018 YANMAR CO., LTD. All RightsReserved.

Fig.11. DIPSTICK

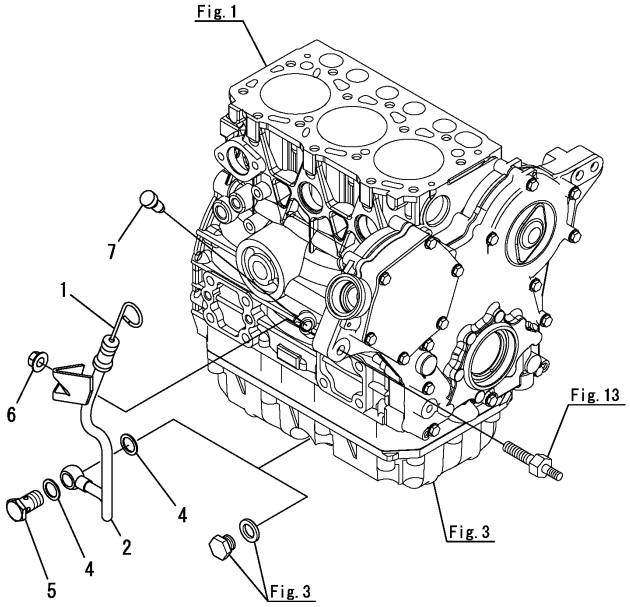

(A)=3YM20 (D)=
(B)= (E)=
(C)= (F)=

No.	Lev.	Parts No.	Description	Q'ty (A)	(B)	(C)	(D)	(E)	(F)	I	R
1	1	128990-34850	DIPSTICK, OIL	1							
2	1	128990-34860	GUIDE ASSY, DIPSTICK	1							
4	1	22190-160002	WASHER, SEAL 16	2							
5	1	23857-100000	BOLT, JOINT 10	1							
6	1	26366-100002	NUT, M10	1							
7	1	124976-34850	PLUG	1							

N:Old $\xleftrightarrow[\text{No}]{\text{Yes}}$ New, Q:Old $\xleftrightarrow[\text{Yes}]{\text{No}}$ New, R:Old $\xleftrightarrow[\text{Yes}]{\text{Yes}}$ New, S:Old $\xleftrightarrow[\text{No}]{\text{No}}$ New, W:Add, Z:Discontinued, F:Interchangeable by set, K:Q'ty Change

Copyright (C) 2018 YANMAR CO., LTD. All RightsReserved.

Fig.12. LUB. OIL SYSTEM

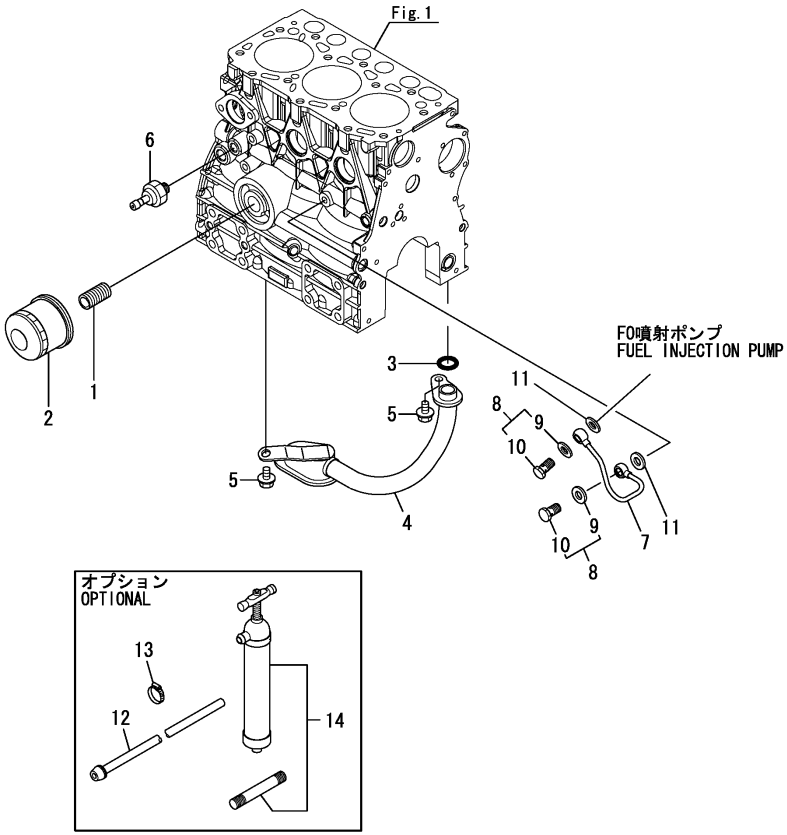

(A)=3YM20 (D)=
(B)= (E)=
(C)= (F)=

No.	Lev.	Parts No.	Description	Q'ty (A)	(B)	(C)	(D)	(E)	(F)	I	R
1	1	129100-35140	BOLT, STUD	1							
1-1	1	119717-35140	BOLT, STUD	1						N	
	(A=*2010.06.)										
2	1	119305-35170	FILTER ASSY, D68XL65	1							
3	1	119717-32060	O-RING, P15.0	1							
4	1	128890-35080	PIPE ASSY, OIL INLET	1							
5	1	26106-060102	BOLT, M6X 10 PLATED	2							
6	1	114250-39450	SWITCH, HYDRAULIC	1							
7	1	119717-39210	PIPE, OIL	1							
8	1	129005-59830	BOLT ASSY, JOINT M8	2							
9	2	22190-080002	WASHER, SEAL 8	2							
10	2	23857-030000	BOLT, JOINT 3	2							
11	1	22190-080002	WASHER, SEAL 8	2							
12	1	128275-39710	PIPE, OIL	1						Z	
	(A=E/#E08826)										
13	1	23080-018000	CLAMP, 18	3						Z	
	(A=E/#E08826)										
14	1	28210-000080	PUMP	1						Z	
	(A=E/#E08826)										

N:Old $\overset{\text{Yes}}{\underset{\text{No}}{\leftrightarrow}}$ New, Q:Old $\overset{\text{No}}{\underset{\text{Yes}}{\leftrightarrow}}$ New, R:Old $\overset{\text{Yes}}{\underset{\text{Yes}}{\leftrightarrow}}$ New, S:Old $\overset{\text{No}}{\underset{\text{No}}{\leftrightarrow}}$ New, W:Add, Z:Discontinued, F:Interchangeable by set, K:Q'ty Change

Copyright (C) 2018 YANMAR CO., LTD. All RightsReserved.

Fig.13. COOLING PUMP(SEA WATER)(TO E/#E13045)

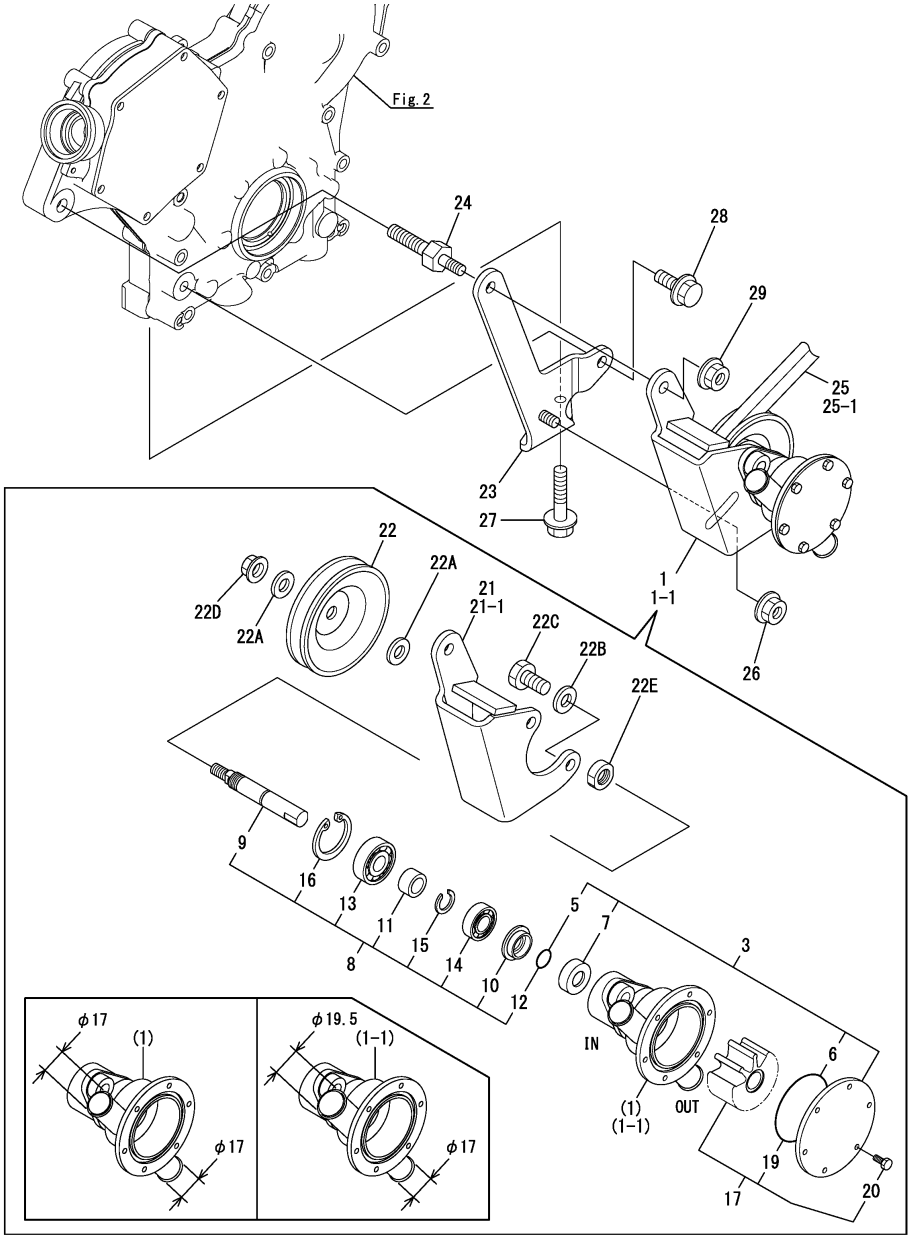

(A)=3YM20 (D)=
(B)= (E)=
(C)= (F)=

No.	Lev.	Parts No.	Description	Q'ty (A)	(B)	(C)	(D)	(E)	(F)	I	R
1	1	128990-42500	PUMP ASSY, WATER	1							
1-1	1	128990-42510	PUMP ASSY, WATER	1						S	2
	(A=E/#E08826)										
1-2	1	128990-42510	PUMP ASSY, WATER	1						Z	
	(A=E/#E13046)										
3	2	128990-42550	WEAR KIT	1						W	
	(A=E/#E13982)										
5	3	X02173432	O-RING	1							
6	3	X02173476	O-RING	1							
7	3	X02233010	SEAL, LIP	1							
8	2	128990-42560	SHAFT KIT	1						W	
	(A=E/#E13982)										
9	3	X0146541	SHAFT, WATER PUMP	1							
10	3	X0145050	PLATE	1							
11	3	X0146542	SPACER	1							
12	3	X02173432	O-RING	1							
13	3	X03431760	BEARING, BALL	1							
14	3	X03431748	BEARING, BALL	1							
15	3	X00370012	RING, RETAINING	1							
16	3	X00371732	RING, RETAINING	1							
17	2	128990-42570	IMPELLER KIT	1						W	
	(A=E/#E13982)										
19	3	X02173476	O-RING	1							
20	3	128990-42520	SCREW	6							
21	2	128990-42150	BRACKET, PUMP	1							
21-1	2	128990-42151	BRACKET, PUMP A	1						F	1
	(A=E/#E00304)										
22	2	124070-42400	V-PULLEY, PUMP	1							
22A	2	X014678901	WASHER	2							
22B	2	X00353309	WASHER	2							
22C	2	X00141916	SCREW	2							
22D	2	X00190050	NUT, LOCK	1							
22E	2	X00183200	NUT	1							
23	1	128990-42160	BRACKET, PUMP B	1							
24	1	128990-42170	BOLT, SPACER	1							
25	1	128990-77350	V-BELT, M/20	1							
25-1	1	104511-78780	V-BELT, M/19	1						F	1
	(A=E/#E00304)										
26	1	26366-080002	NUT, M8	1							
27	1	26106-060302	BOLT, M6X 30 PLATED	1							
28	1	26106-080202	BOLT, M8X 20 PLATED	1							
29	1	26366-080002	NUT, M8	1							

Remarks
(1)No.21-1 & 25-1 interchangeable by set.
(2)Interchangeable by simultaneous replacement with loalarrangements pump entrance hose(57mm-68mm).

N:Old $\overset{\text{Yes}}{\underset{\text{No}}{\leftrightarrows}}$ New, Q:Old $\overset{\text{No}}{\underset{\text{Yes}}{\leftrightarrows}}$ New, R:Old $\overset{\text{Yes}}{\underset{\text{Yes}}{\leftrightarrows}}$ New, S:Old $\overset{\text{No}}{\underset{\text{No}}{\leftrightarrows}}$ New, W:Add, Z:Discontinued, F:Interchangeable by set, K:Q'ty Change

Copyright (C) 2018 YANMAR CO., LTD. All RightsReserved.

Fig.43. (13A)COOLING PUMP(SEA WATER)(FROM E/#E13046)

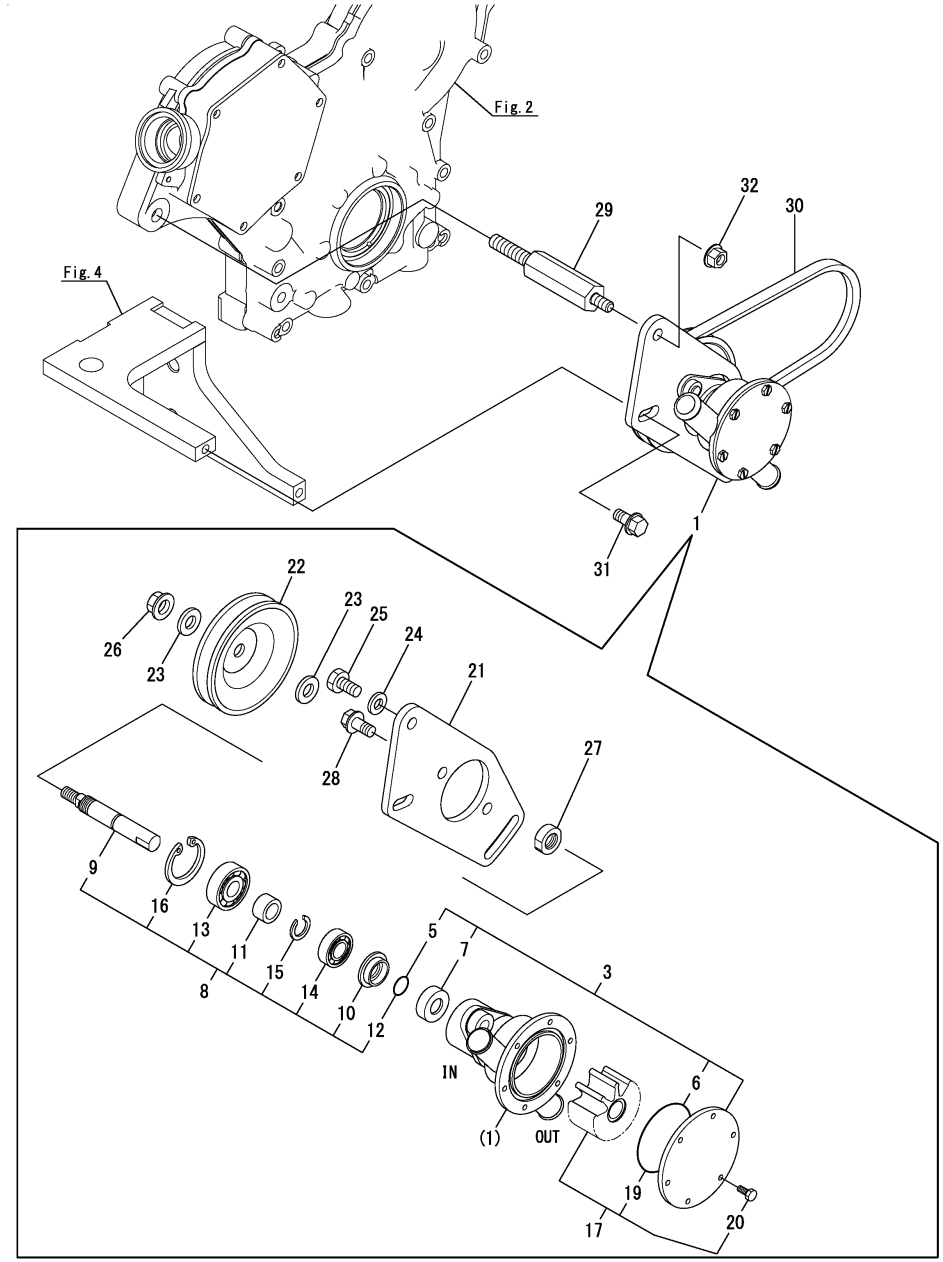

(A)=3YM20 (D)=
(B)= (E)=
(C)= (F)=

No.	Lev.	Parts No.	Description	Q'ty (A)	(B)	(C)	(D)	(E)	(F)	I	R
1	1	128995-42500	PUMP ASSY, WATER	1						W	
	(A=E/#E13046)										
3	2	128990-42550	WEAR KIT	1						W	
	(A=E/#E13982)										
5	3	X02173432	O-RING	1							
6	3	X02173476	O-RING	1							
7	3	X02233010	SEAL, LIP	1							
8	2	128990-42560	SHAFT KIT	1						W	
	(A=E/#E13982)										
9	3	X0146541	SHAFT, WATER PUMP	1							
10	3	X0145050	PLATE	1							
11	3	X0146542	SPACER	1							
12	3	X02173432	O-RING	1							
13	3	X03431760	BEARING, BALL	1							
14	3	X03431748	BEARING, BALL	1							
15	3	X00370012	RING, RETAINING	1							
16	3	X00371732	RING, RETAINING	1							
17	2	128990-42570	IMPELLER KIT	1						W	
	(A=E/#E13982)										
19	3	X02173476	O-RING	1							
20	3	128990-42520	SCREW	6							
21	2	128995-42150	BRACKET, PUMP	1							
22	2	124070-42400	V-PULLEY, PUMP	1							
23	2	X014678901	WASHER	2							
24	2	X00353309	WASHER	2							
25	2	X00141916	SCREW	2							
26	2	X00190050	NUT, LOCK	1							
27	2	X00183200	NUT	1							
28	2	26106-080162	BOLT, M8X 16 PLATED	2							
29	1	128995-42170	BOLT, PUMP SPACER	1							
30	1	25111-002000	V-BELT	1							
30-1	1	128990-77350	V-BELT, M/20	1						R	
	(A=E/#E15078)										
31	1	26106-080162	BOLT, M8X 16 PLATED	1							
32	1	26366-080002	NUT, M8	1							

Remarks
* Fig.4 No.1-1 interchangeable by set.

N:Old $\overset{\text{Yes}}{\underset{\text{No}}{\leftrightarrow}}$ New, Q:Old $\overset{\text{No}}{\underset{\text{Yes}}{\leftrightarrow}}$ New, R:Old $\overset{\text{Yes}}{\underset{\text{Yes}}{\leftrightarrow}}$ New, S:Old $\overset{\text{No}}{\underset{\text{No}}{\leftrightarrow}}$ New, W:Add, Z:Discontinued, F:Interchangeable by set, K:Q'ty Change

Copyright (C) 2018 YANMAR CO., LTD. All RightsReserved.

Fig.14. COOLING PUMP(FRESH WATER)

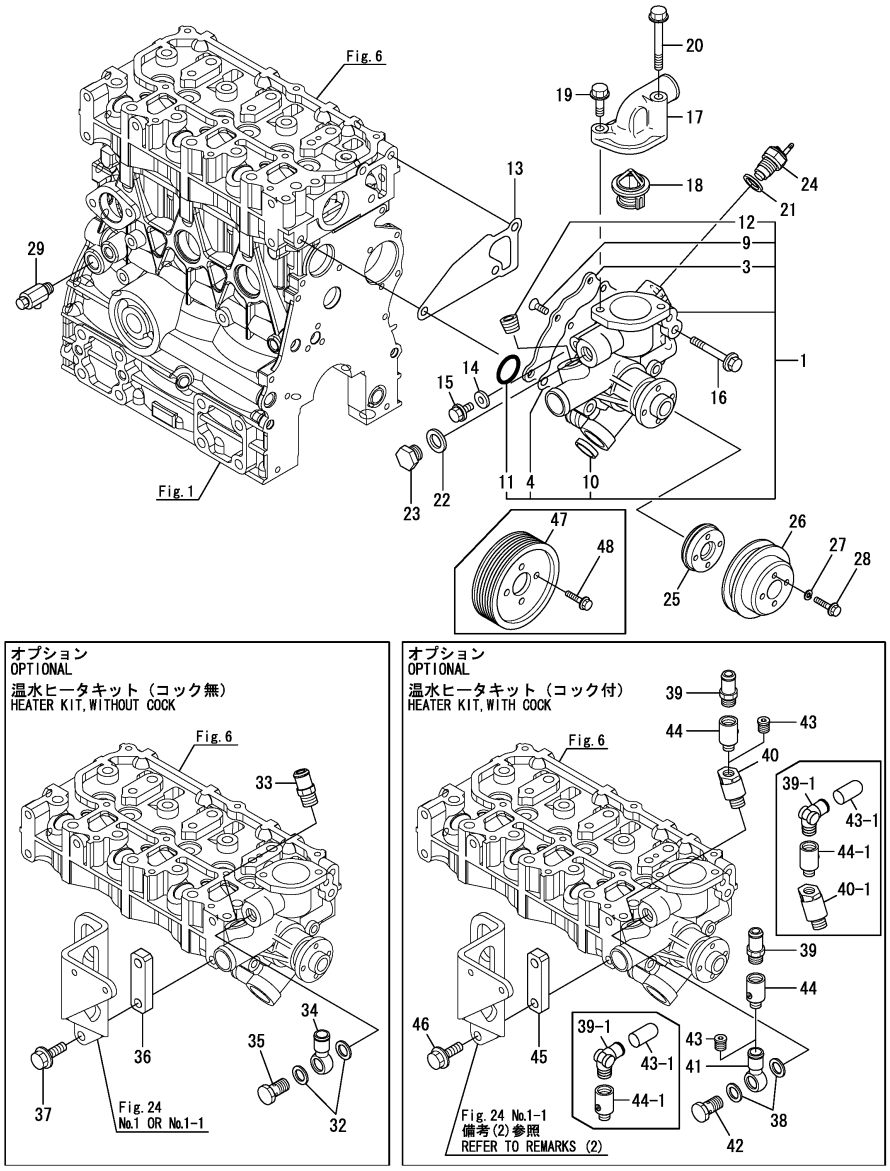

(A)=3YM20 (D)=
(B)= (E)=
(C)= (F)=

No.	Lev.	Parts No.	Description	Q'ty (A)	(B)	(C)	(D)	(E)	(F)	I	R
1	1	119540-42000	PUMP ASSY, WATER	1							
1-1	1	119C10-42000	PUMP ASSY, WATER	1						N	
	(A=*2012.02.)										
3	2	119515-42041	COVER	1							
4	2	119717-42031	GASKET	1							
9	2	26577-060122	SCREW, M6X12	4							
10	2	27241-250000	PLUG, 25	1							
11	2	119717-42320	O-RING, P26	1							
11-1	2	119C10-42320	O-RING, 2028	1						S	
	(A=*2012.02.)										
12	2	129916-49740	PLUG, R3/8	1							
13	1	119515-42020	GASKET, WATER PUMP	1							
14	1	23414-080000	GASKET, 8X1.0	1							
15	1	26106-080122	BOLT, M8X 12 PLATED	1							
16	1	26106-080502	BOLT, M8X 50 PLATED	3							
17	1	124101-49530	COVER, THERMOSTAT	1							
18	1	128990-49800	THERMOSTAT, 71	1							
19	1	26106-080252	BOLT, M8X 25 PLATED	1							
20	1	26106-080652	BOLT, M8X 65 PLATED	1							
21	1	124465-44950	GASKET, 16	1							
22	1	124465-44950	GASKET, 16	1							
23	1	23887-160002	PLUG, 16	1							
23-1	1	121450-42450	PLUG, M16	1						R	
	(A=E/#E00101)										
24	1	46150-503100	SWITCH, 95	1							
24-1	1	128990-44500	SWITCH, 106	1						N	
	(A=E/#E02523)										
25	1	128990-42260	SPACER	1						Z	
	(A=E/#E11906)										
26	1	119740-42350	V-PULLEY, D=90	1						Z	
	(A=E/#E11906)										
27	1	22217-060000	WASHER, SPRING 6	4							
27-1	1	22217-060000	WASHER, SPRING 6	4						Z	
	(A=*2008.03.)										
28	1	26106-060282	BOLT, M6X 28 PLATED	4							
28-1	1	26106-060252	BOLT, M6X 25 PLATED	4						R	
	(A=*2008.03.)										
28-2	1	26106-060252	BOLT, M6X 25 PLATED	4						Z	
	(A=E/#E11906)										
29	1	119620-49290	COCK ASSY, 1/4	1							
32	1	124465-44950	GASKET, 16	2						Z	1
	(A=E/#E08826)										
33	1	128990-49320	JOINT, 3/8	1						Z	1
	(A=E/#E08826)										
34	1	128990-49330	JOINT	1						Z	1
	(A=E/#E08826)										
35	1	23854-100000	BOLT, JOINT 10	1						Z	1
	(A=E/#E08826)										
36	1	128890-55020	SPACER	1						W	1
	(A=E/#E13624)										
36-1	1	128890-55020	SPACER	1						Z	1

Remarks
(1)Heater kit, without cook assy.
(2)Heater kit, with cook assy.
To avoid the interference between the joint and lifting hook in use of Fig.24 No.1, please exchange for No.1-1.
(3)Valeo generator specifications.

N:Old $\overset{\text{Yes}}{\underset{\text{No}}{\leftrightarrow}}$ New, Q:Old $\overset{\text{No}}{\underset{\text{Yes}}{\leftrightarrow}}$ New, R:Old $\overset{\text{Yes}}{\underset{\text{Yes}}{\leftrightarrow}}$ New, S:Old $\overset{\text{No}}{\underset{\text{No}}{\leftrightarrow}}$ New, W:Add, Z:Discontinued, F:Interchangeable by set, K:Q'ty Change

++ CONTINUE ++

Copyright (C) 2018 YANMAR CO., LTD. All RightsReserved.

Fig.14. COOLING PUMP(FRESH WATER)

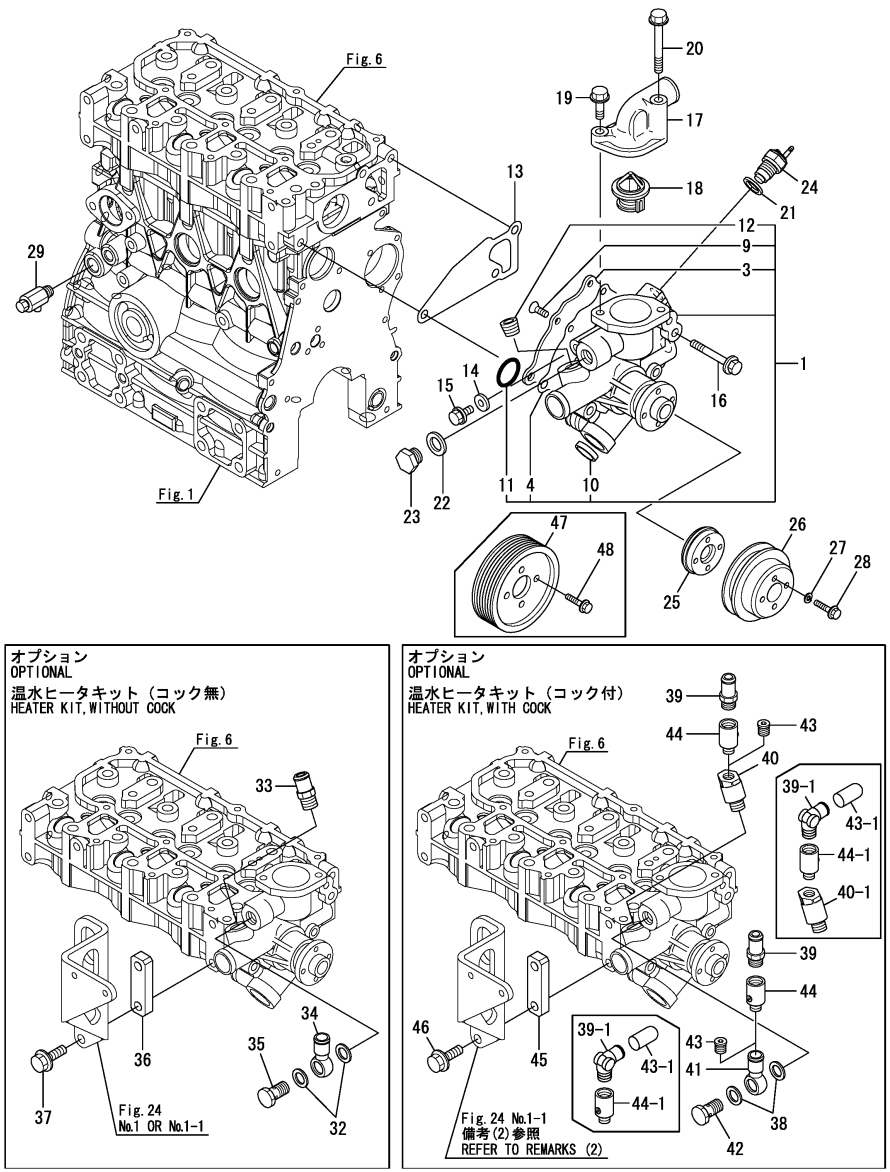

(A)=3YM20 (D)=
(B)= (E)=
(C)= (F)=

No.	Lev.	Parts No.	Description	Q'ty (A)	(B)	(C)	(D)	(E)	(F)	I	R
		(A=E/#E08826)									
37	1	26106-080252	BOLT, M8X 25 PLATED	2						W	1
		(A=E/#E13624)									
37-1	1	26106-080252	BOLT, M8X 25 PLATED	2						Z	1
		(A=E/#E08826)									
38	1	124465-44950	GASKET, 16	2						W	2
		(A=E/#E13624)									
39	1	128990-49320	JOINT, 3/8	2						W	2
		(A=E/#E13624)									
39-1	1	129051-49310	ELBOW, PT3/8	2						N	
		(A=E/#E14308)									
40	1	128990-49350	JOINT, 3/8X1/4	1						W	2
		(A=E/#E13624)									
40-1	1	128990-49351	JOINT,3/8X1/4 RETURN	1						N	
		(A=E/#E14308)									
41	1	128990-49360	JOINT	1						W	2
		(A=E/#E13624)									
42	1	128990-49370	BOLT, PIPE JOINT	1						W	2
		(A=E/#E13624)									
43	1	128990-49380	PLUG, R1/4	2						W	2
		(A=E/#E13624)									
43-1	1	128990-49400	CAP,WATER	2						N	
		(A=E/#E13624)									
44	1	128990-49390	COCK ASSY,R1/4XRP3/8	2						W	2
		(A=E/#E13624)									
44-1	1	128990-49391	COCK ASSY,R1/4XG3/8	2						R	
		(A=E/#E14308)									
45	1	128890-55020	SPACER	1						W	2
		(A=E/#E13624)									
46	1	26106-080252	BOLT, M8X 25 PLATED	2						W	2
		(A=E/#E13624)									
47	1	128990-42350	PULLEY,CW PUMP 6PK	1						W	3
		(A=E/#E11906)									
47-1	1	128990-42351	PULLEY,CW PUMP 6PK	1						N	
		(A=E/#E13034)									
48	1	26106-060122	BOLT, M6X 12 PLATED	4						W	3
		(A=E/#E11906)									

Remarks
(1)Heater kit, without cook assy.
(2)Heater kit, with cook assy.
To avoid the interference between the joint and lifting hook in use of Fig.24 No.1, please exchange for No.1-1.
(3)Valeo generator specifications.

N:Old $\overset{\text{Yes}}{\underset{\text{No}}{\leftrightarrows}}$ New, Q:Old $\overset{\text{No}}{\underset{\text{Yes}}{\leftrightarrows}}$ New, R:Old $\overset{\text{Yes}}{\underset{\text{Yes}}{\leftrightarrows}}$ New, S:Old $\overset{\text{No}}{\underset{\text{No}}{\leftrightarrows}}$ New, W:Add, Z:Discontinued, F:Interchangeable by set, K:Q'ty Change

Copyright (C) 2018 YANMAR CO., LTD. All RightsReserved.

Fig.15. COOLER(FRESH WATER)

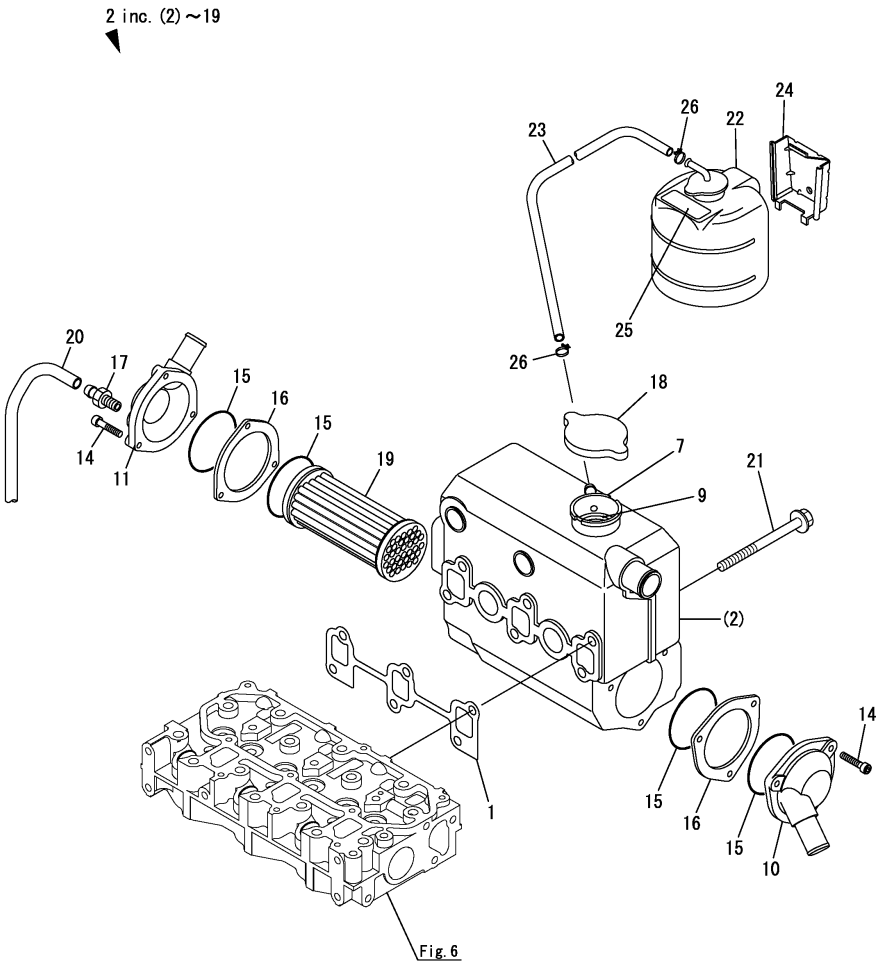

(A)=3YM20 (D)=
(B)= (E)=
(C)= (F)=

No.	Lev.	Parts No.	Description	Q'ty (A)	(B)	(C)	(D)	(E)	(F)	I	R
1	1	119717-13110	GASKET, EXH.MANIFOLD	1							
2	1	128990-44900	COOLER ASSY, WATER	1							
2-1	1	128990-44901	COOLER ASSY, WATER	1						N	
	(A=*2005.08.)										
7	3	129673-44110	FILLER	1							
9	3	129673-44150	TUBE, D28.5X1.5 LG6	1							
10	2	128990-44070	BONNET	1							
10-1	2	128990-44071	BONNET	1						S	1
	(A=*2005.08.)										
11	2	128990-44080	BONNET ASSY	1							
11-1	2	128990-44081	BONNET ASSY	1						S	1
	(A=*2005.08.)										
14	2	128990-44090	SCREW, M6X30	6							
15	2	128990-44100	O-RING, D65.6X3.53	4							
16	2	128990-44110	SPACER	2							
17	2	128990-44120	PLUG, DRAIN	1							
18	2	128990-44130	CAP	1							
18-1	2	129673-44131	CAP	1						N	
	(A=*2005.08.)										
19	2	128990-44400	ELEMENT	1							
19-1	2	128990-44401	ELEMENT	1						S	1
	(A=*2005.08.)										
20	1	23061-070300	PIPE, 7X 300	1							
21	1	26106-081152	BOLT, M8X115 PLATED	6							
22	1	128397-44500	TANK ASSY, SUB	1							
23	1	129270-44500	PIPE, OVERFLOW	1							
23-1	1	129270-44501	PIPE	1						N	
	(A=E/#E13624)										
24	1	128397-44510	BRACKET	1							
25	1	129670-44570	LABEL, SUB-TANK	1							
26	1	23010-013000	CLAMP 13	2							

Remarks
(1)No.10-1, 11-1 & 19-1 interchangeable by set.

N:Old ←Yes/No→ New, Q:Old ←No/Yes→ New, R:Old ←Yes/Yes→ New, S:Old ←No/No→ New, W:Add, Z:Discontinued, F:Interchangeable by set, K:Q'ty Change

Copyright (C) 2018 YANMAR CO., LTD. All RightsReserved.

Fig.16. COOLING PIPE(SEA WATER)

(A)=3YM20 (D)=
(B)= (E)=
(C)= (F)=

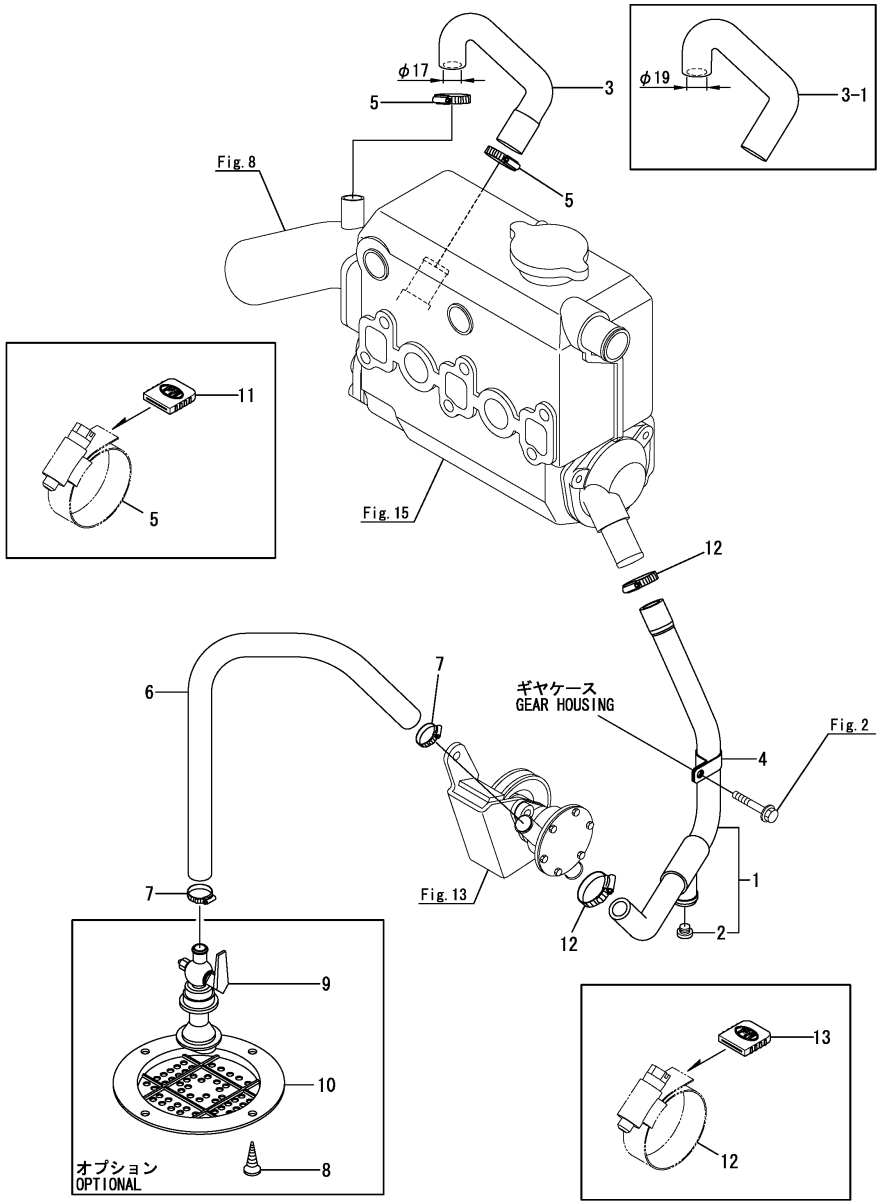

No.	Lev.	Parts No.	Description	Q'ty (A)	(B)	(C)	(D)	(E)	(F)	I	R
1	1	128990-49010	PIPE, WATER	1							
1-1	1	128990-49011	PIPE A,CSW	1						R	
	(A=E/#E12730)										
2	2	128990-49110	PLUG ASSY, G1/8	1							
3	1	128990-49020	PIPE, WATER	1							
3-1	1	128990-49021	PIPE, WATER	1						S	1
	(A=E/#E10518)										
4	1	121575-49310	RETAINER, PIPE	1							
5	1	23000-028000	CLAMP, 28	2							
6	1	124223-49050	PIPE, WATER	1							
7	1	23000-025000	CLAMP, 25	2							
8	1	22724-800380	SCREW, 8.0X38	4							
9	1	43662-015020	COCK ASSY, KINGSTON	1							
9-1	1	43662-015021	COCK	1						N	
	(A=*2007.03.)										
10	1	43666-020951	COVER, STRAINER	1							
11	1	129677-49950	PROTECTOR,HOSE CLAMP	2						W	
	(A=E/#E13982)										
12	1	23000-028000	CLAMP, 28	2							
13	1	129677-49950	PROTECTOR,HOSE CLAMP	2						W	
	(A=E/#E13982)										

Remarks
(1)No.3-1 & Fig.8 No.2-1 interchangeable by set.

N:Old ←Yes/No→ New, Q:Old ←No/Yes→ New, R:Old ←Yes/Yes→ New, S:Old ←No/No→ New, W:Add, Z:Discontinued, F:Interchangeable by set, K:Q'ty Change

Copyright (C) 2018 YANMAR CO., LTD. All RightsReserved.

Fig.17. COOLING PIPE(FRESH WATER)

(A)=3YM20 (D)=
(B)= (E)=
(C)= (F)=

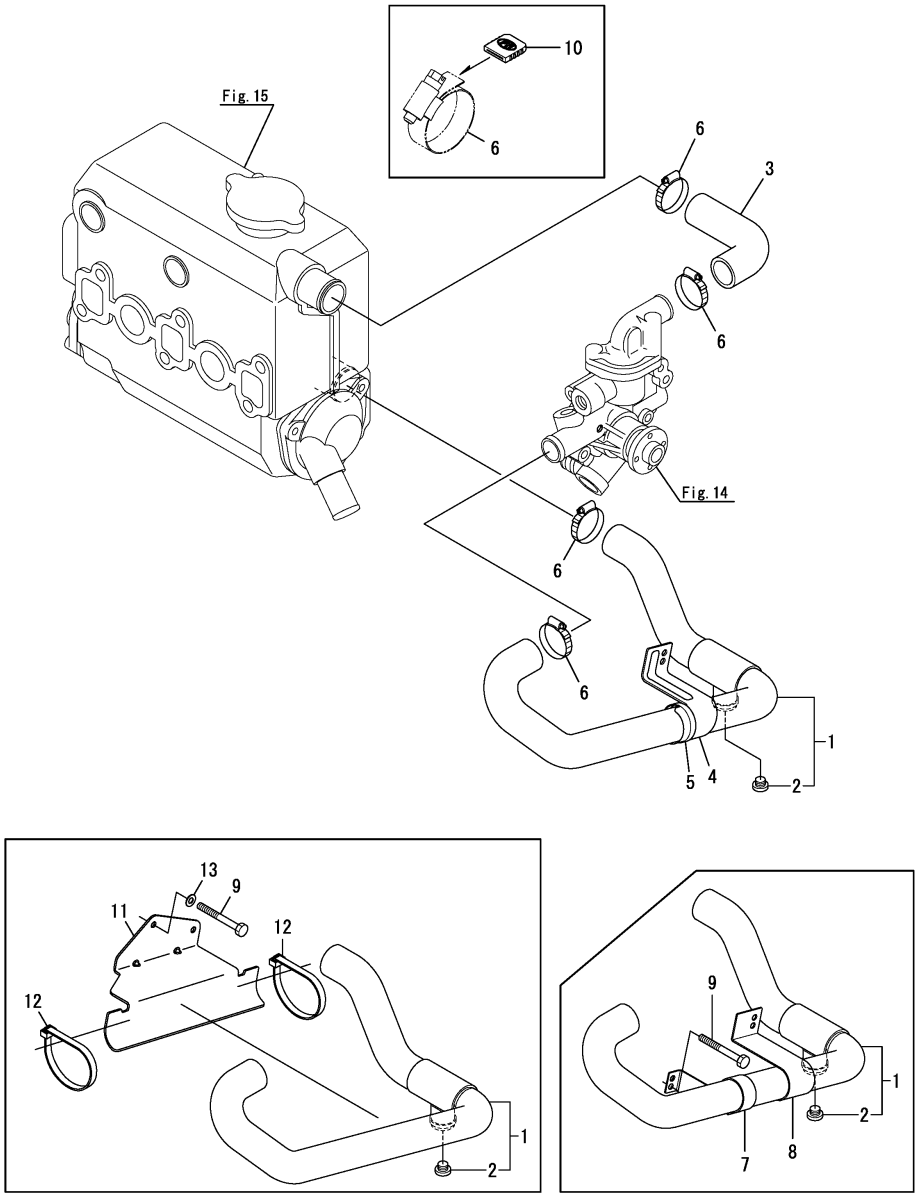

No.	Lev.	Parts No.	Description	Q'ty (A)	(B)	(C)	(D)	(E)	(F)	I	R
1	1	128990-49050	PIPE, WATER	1							
1-1	1	128990-49051	HOSE ASSY, CFW	1						N	
	(A=E/#E14962)										
2	2	128990-49110	PLUG ASSY, G1/8	1							
3	1	128990-49060	PIPE, WATER	1							
4	1	128990-49150	RETAINER, PIPE	1						Z	
	(A=E/#E11906)										
5	1	194250-51660	BAND, NYLON 250	1							
5-1	1	29622-250001	BAND, RF250	1						N	
	(A=*2012.05.)										
5-2	1	29622-250001	BAND, RF250	1						Z	
	(A=E/#E11906)										
6	1	23000-041000	CLAMP, 41	4							
6-1	1	129670-49500	CLIP, HOSE 38	4						R	
	(A=E/#E11906)										
7	1	128990-49161	RETAINER,CFW HOSE	1						W	1
	(A=E/#E11906)										
7-1	1	128990-49161	RETAINER,CFW HOSE	1						Z	1
	(A=E/#E14962)										
8	1	128990-49170	RETAINER,CFW HOSE	1						W	1
	(A=E/#E11906)										
8-1	1	128990-49170	RETAINER,CFW HOSE	1						Z	1
	(A=E/#E14962)										
9	1	26116-060652	BOLT, M6X 65 PLATED	1						W	1
	(A=E/#E11906)										
10	1	129677-49950	PROTECTOR,HOSE CLAMP	4						W	
	(A=E/#E13982)										
11	1	128990-49190	RETAINER,CFW HOSE	1						W	
	(A=E/#E14962)										
12	1	128990-59890	BAND,200	2						W	
	(A=E/#E14962)										
13	1	22137-060000	WASHER, 6	1						W	
	(A=E/#E14962)										

Remarks
(1)Valeo generator specification.

N:Old $\xleftrightarrow[\text{No}]{\text{Yes}}$ New, Q:Old $\xleftrightarrow[\text{Yes}]{\text{No}}$ New, R:Old $\xleftrightarrow[\text{Yes}]{\text{Yes}}$ New, S:Old $\xleftrightarrow[\text{No}]{\text{No}}$ New, W:Add, Z:Discontinued, F:Interchangeable by set, K:Q'ty Change

Copyright (C) 2018 YANMAR CO., LTD. All RightsReserved.

Fig.18. BILGE PUMP(STANDARD)(OPTIONAL)(TO APR. 2004)

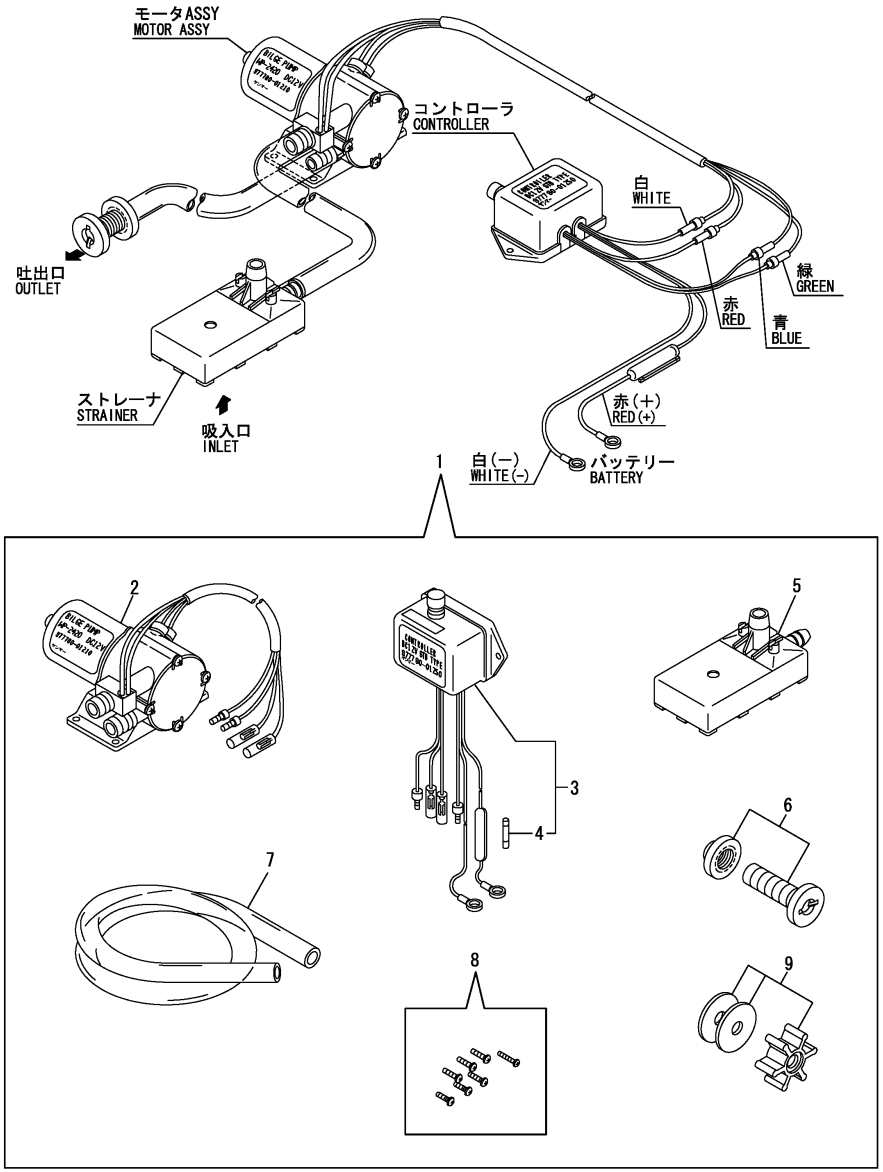

(A)=3YM20 (D)=
(B)= (E)=
(C)= (F)=

No.	Lev.	Parts No.	Description	Q'ty (A)	(B)	(C)	(D)	(E)	(F)	I	R
1	1	977780-01211	PUMP ASSY, BILGE	1							1
2	2	977780-01230	MOTOR ASSY(BILG PUMP	1							
3	2	977780-01250	CONTROLLER	1							
4	3	X8636008003	FUSE	1							
5	2	X179100021X	STRAINER	1							
6	2	X179100100X	PIPE ASSY	1							
7	2	X0044021509	HOSE A	1							
8	2	X199903800X	SCREW KIT	1							
9	2	977780-03000	INPELLER	1							

Remarks
(1)Inner parts are shown in Fig.38(19A).

N:Old $\xleftarrow[\text{No}]{\text{Yes}}$ New, Q:Old $\xleftarrow[\text{Yes}]{\text{No}}$ New, R:Old $\xleftarrow[\text{Yes}]{\text{Yes}}$ New, S:Old $\xleftarrow[\text{No}]{\text{No}}$ New, W:Add, Z:Discontinued, F:Interchangeable by set, K:Q'ty Change

Copyright (C) 2018 YANMAR CO., LTD. All RightsReserved.

Fig.19. BILGE PUMP(DELUXE)(OPTIONAL)(TO APR. 2004)

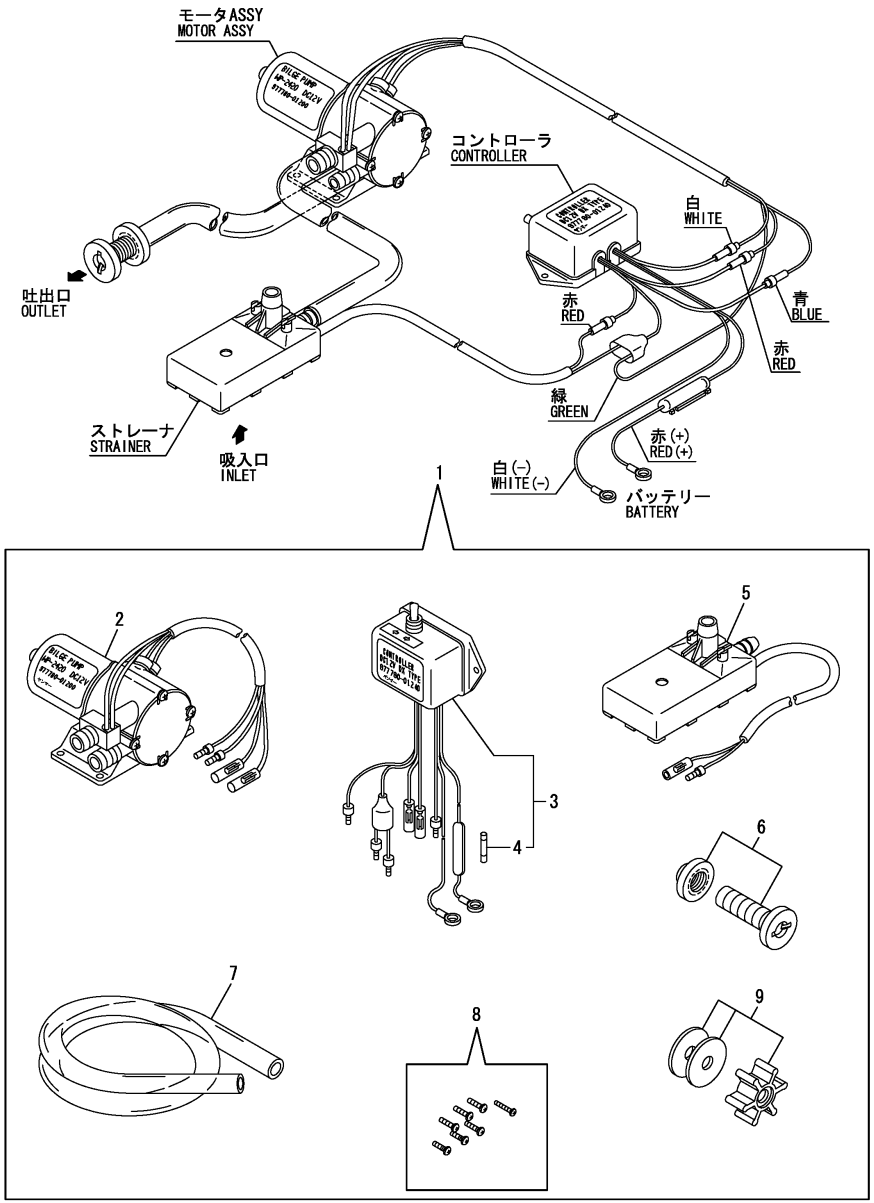

(A)=3YM20 (D)=
(B)= (E)=
(C)= (F)=

No.	Lev.	Parts No.	Description	Q'ty (A)	(B)	(C)	(D)	(E)	(F)	I	R
1	1	977780-01211	PUMP ASSY, BILGE	1							1
2	2	977780-01230	MOTOR ASSY(BILG PUMP	1							
3	2	977780-01240	CONTROLLER	1							
4	3	X8636008003	FUSE	1							
5	2	X179100011X	STRAINER	1							
6	2	X179100100X	PIPE ASSY	1							
7	2	X0044021509	HOSE A	1							
8	2	X199903800X	SCREW KIT	1							
9	2	977780-03000	INPELLER	1							

Remarks
(1)Inner parts are shown in Fig.38(19A).

N:Old $\overset{\text{Yes}}{\underset{\text{No}}{\leftrightarrow}}$ New, Q:Old $\overset{\text{No}}{\underset{\text{Yes}}{\leftrightarrow}}$ New, R:Old $\overset{\text{Yes}}{\underset{\text{Yes}}{\leftrightarrow}}$ New, S:Old $\overset{\text{No}}{\underset{\text{No}}{\leftrightarrow}}$ New, W:Add, Z:Discontinued, F:Interchangeable by set, K:Q'ty Change

Copyright (C) 2018 YANMAR CO., LTD. All RightsReserved.

Fig.38. (19A)BILGE PUMP(OPTIONAL)(FROM MAR. 2004)

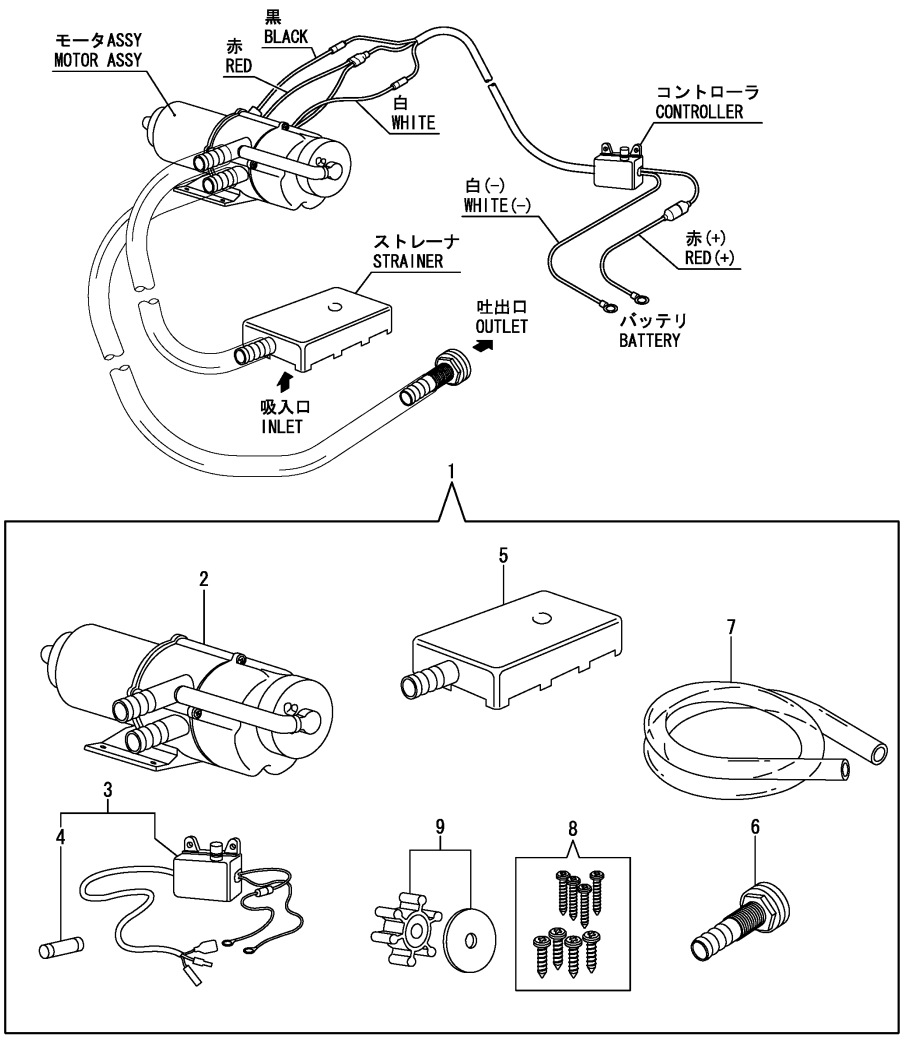

(A)=3YM20 (D)=
(B)= (E)=
(C)= (F)=

No.	Lev.	Parts No.	Description	Q'ty (A)	(B)	(C)	(D)	(E)	(F)	I	R
1	1	977780-01211	PUMP ASSY, BILGE	1							
2	2	X0318101004	MOTOR ASSY, BILGE	1							
3	2	X158606410X	SWITH	1							
4	3	X8636015001	FUSE	1							
5	2	X179100022X	STRAINER	1							
6	2	X179100100X	PIPE ASSY	1							
7	2	X0044021509	HOSE A	1							
8	2	X199906101X	SCREW SET	1							
9	2	977780-03000	INPELLER	1							

N:Old $\xleftrightarrow[\text{No}]{\text{Yes}}$ New, Q:Old $\xleftrightarrow[\text{Yes}]{\text{No}}$ New, R:Old $\xleftrightarrow[\text{Yes}]{\text{Yes}}$ New, S:Old $\xleftrightarrow[\text{No}]{\text{No}}$ New, W:Add, Z:Discontinued, F:Interchangeable by set, K:Q'ty Change

Copyright (C) 2018 YANMAR CO., LTD. All RightsReserved.

Fig.20. FUEL INJECTION PUMP

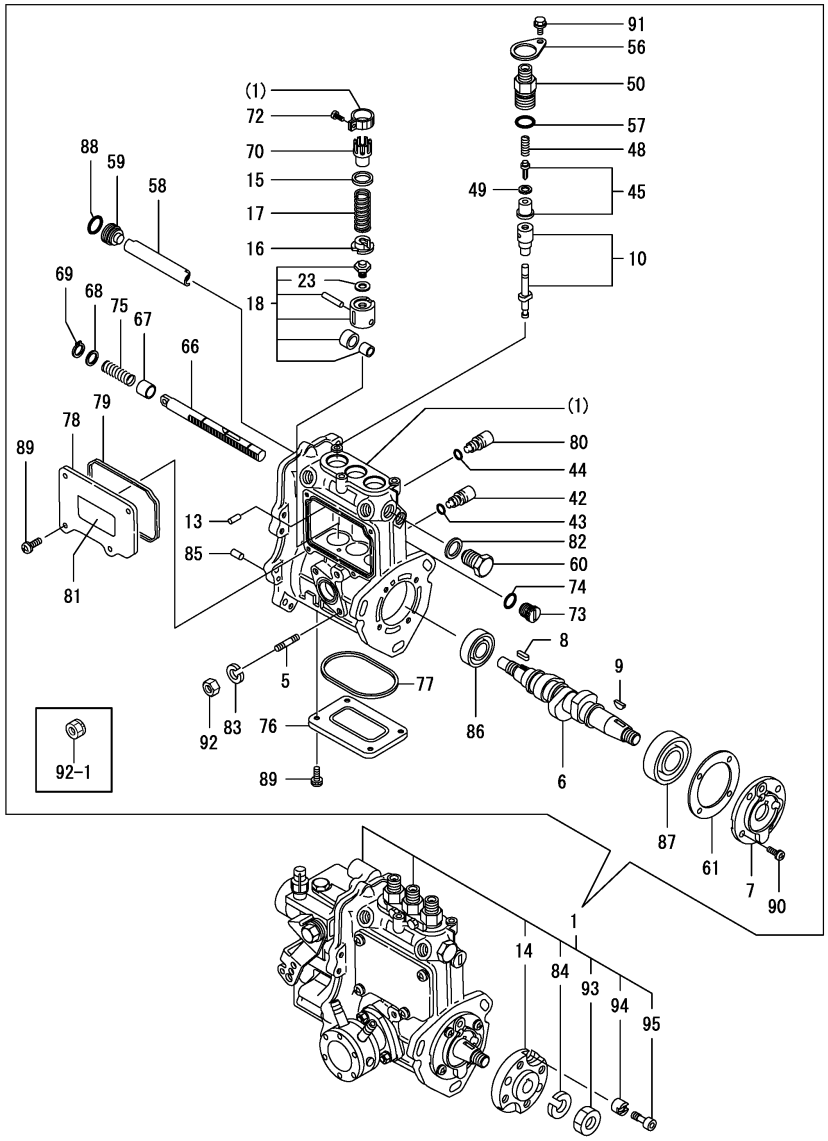

(A)=3YM20 (D)=
(B)= (E)=
(C)= (F)=

No.	Lev.	Parts No.	Description	Q'ty (A)	(B)	(C)	(D)	(E)	(F)	I	R
1	1	728890-51350	PUMP ASSY, INJECTION	1							1
5	2	129155-51020	BOLT, STUD	2							
6	2	119717-51030	CAMSHAFT	1							
7	2	119717-51060	SUPPORT, CAMSHAFT	1							
8	2	119717-51070	FEATHER KEY,PARALLEL	1							
9	2	122710-51090	FEATHER KEY,WOODRUFF	1							
10	2	119415-51100	PLUNGER ASSY, FUEL	3							
13	2	129155-51140	PIN	3							
14	2	119717-51150	FLANGE	1							
15	2	158600-51170	RETAINER, SPRING	3							
16	2	119717-51180	RETAINER, SPRING	3							
16-1	2	119717-51570	RETAINER, SPRING	3						R	
	(A=E/#E03873)										
17	2	119717-51190	SPRING, PLUNGER	3							
18	2	119717-51200	TAPPET ASSY	3							
18-1	2	119717-51201	TAPPET ASSY, ROLLER	3						N	
	(A=*2016.04.)										
23	3	129155-51600	SHIM SET, ADJUSTING	3							
42	2	158600-51270	STOPPER, TAPPET	3							
43	2	129155-51280	O-RING, S6	3							
44	2	129155-51280	O-RING, S6	1							
45	2	119717-51300	VALVE ASSY, DELIVERY	3							
48	2	119717-51330	SPRING, DELIVERY	3							
49	2	124550-51350	GASKET, DELIVERY	3							
50	2	158600-51440	VALVE ASSY, DELIVERY	3							
50-1	2	158600-51441	VALVE ASSY, DELIVERY	3						N	
	(A=*2004.07.)										
50-2	2	158600-51442	VALVE ASSY, DELIVERY	3						N	
	(A=E/#E02937)										
56	2	118400-51370	PLATE, LOCKING	3							
56-1	2	119125-51370	RETAINER	3						R	
	(A=*2010.09.)										
57	2	24316-000150	O-RING, 4DP15.0	3							
58	2	129155-51400	DEFLECTOR	1							
59	2	158600-51410	PLUG, DEFLECTOR	1							
60	2	158600-51420	PLUG, DEFLECTOR	1							
61	2	129155-51450	SHIM SET, ADJUSTING	1							
66	2	119717-51500	RACK, CONTROL	1							
67	2	129155-51521	BUSH, RACK	1							
67-1	2	119025-51520	BUSH,RACK	1						R	
	(A=*2011.08.)										
68	2	129155-51530	SPACER	1							
69	2	129155-51540	CIRCLIP	1							
70	2	129155-51550	PINION, CONTROL	3							
72	2	129100-51570	SCREW, PINION	3							
73	2	158600-51570	PLUG, RACK	1							
74	2	129155-51580	O-RING	1							
75	2	129155-51591	SPRING, RACK	1							
76	2	129155-51701	COVER	1							
77	2	119717-51710	GASKET	1							
77-1	2	119717-51711	GASKET	1						N	

N:Old $\frac{\text{Yes}}{\text{No}}$ New, Q:Old $\frac{\text{No}}{\text{Yes}}$ New, R:Old $\frac{\text{Yes}}{\text{Yes}}$ New, S:Old $\frac{\text{No}}{\text{No}}$ New, W:Add, Z:Discontinued, F:Interchangeable by set, K:Q'ty Change

Remarks
(1)Governor(Fig.21) & Fuel Feed Pump(Fig.22) is incorporated in this Fuel Injection Pump(No.1).

++ CONTINUE ++

Copyright (C) 2018 YANMAR CO., LTD. All RightsReserved.

Fig.20. FUEL INJECTION PUMP

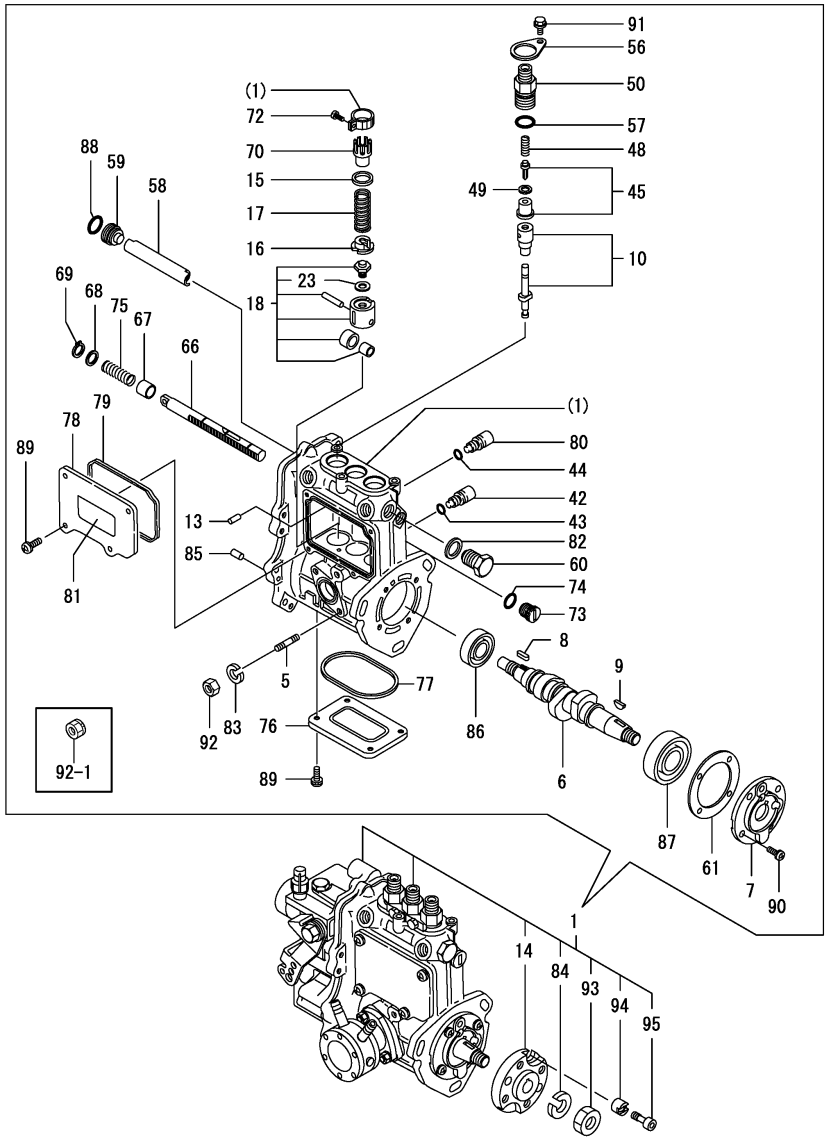

(A)=3YM20 (D)=
(B)= (E)=
(C)= (F)=

No.	Lev.	Parts No.	Description	Q'ty (A)	(B)	(C)	(D)	(E)	(F)	I	R
	(A=E/#E03857)										
78	2	119717-51750	COVER	1							
79	2	119717-51760	GASKET	1							
79-1	2	119717-51761	GASKET	1						N	
	(A=E/#E03857)										
80	2	158600-51790	STOPPER, RACK	1							
81	2	129156-51910	LABEL, CAUTION	1						Z	
	(A=E/#E03857)										
82	2	22190-160002	WASHER, SEAL 16	1							
83	2	22217-060000	WASHER, SPRING 6	2						Z	
	(A=*2009.08.)										
84	2	22217-120000	WASHER, SPRING 12	1							
85	2	22351-050010	PIN, SPRING 5.0X10	2							
86	2	24101-060034	BEARING, BALL 6003	1							
87	2	24101-063034	BEARING, BALL 6303	1							
88	2	119717-51420	O-RING	1							
89	2	26022-050122	SCREW, M5X12	8							
90	2	26022-060162	SCREW, M6X16	4							
90-1	2	119125-51900	BOLT, COLLAR M6 X 14	4						R	
	(A=*2011.03.)										
91	2	26106-050102	BOLT, M5X 10 PLATED	3							
92	2	26716-060002	NUT, M6	2							
92-1	2	119717-51860	NUT, M6	2						N	
	(A=*2009.08.)										
93	2	26716-120002	NUT, M12	1							
94	2	119717-51480	COLLAR	1							
94-1	2	119717-51481	COLLAR, FIC FIX	1						N	
	(A=*2012.06.)										
95	2	119717-51490	BOLT	1							
95-1	2	119717-51491	BOLT, FIXATION	1						N	
	(A=*2012.06.)										

Remarks
(1)Governor(Fig.21) & Fuel Feed Pump(Fig.22) is incorporated in this Fuel Injection Pump(No.1).

N:Old $\xleftarrow[\text{No}]{\text{Yes}}$ New, Q:Old $\xleftarrow[\text{Yes}]{\text{No}}$ New, R:Old $\xleftarrow[\text{Yes}]{\text{Yes}}$ New, S:Old $\xleftarrow[\text{No}]{\text{No}}$ New, W:Add, Z:Discontinued, F:Interchangeable by set, K:Q'ty Change

Copyright (C) 2018 YANMAR CO., LTD. All RightsReserved.

Fig.21. GOVERNOR

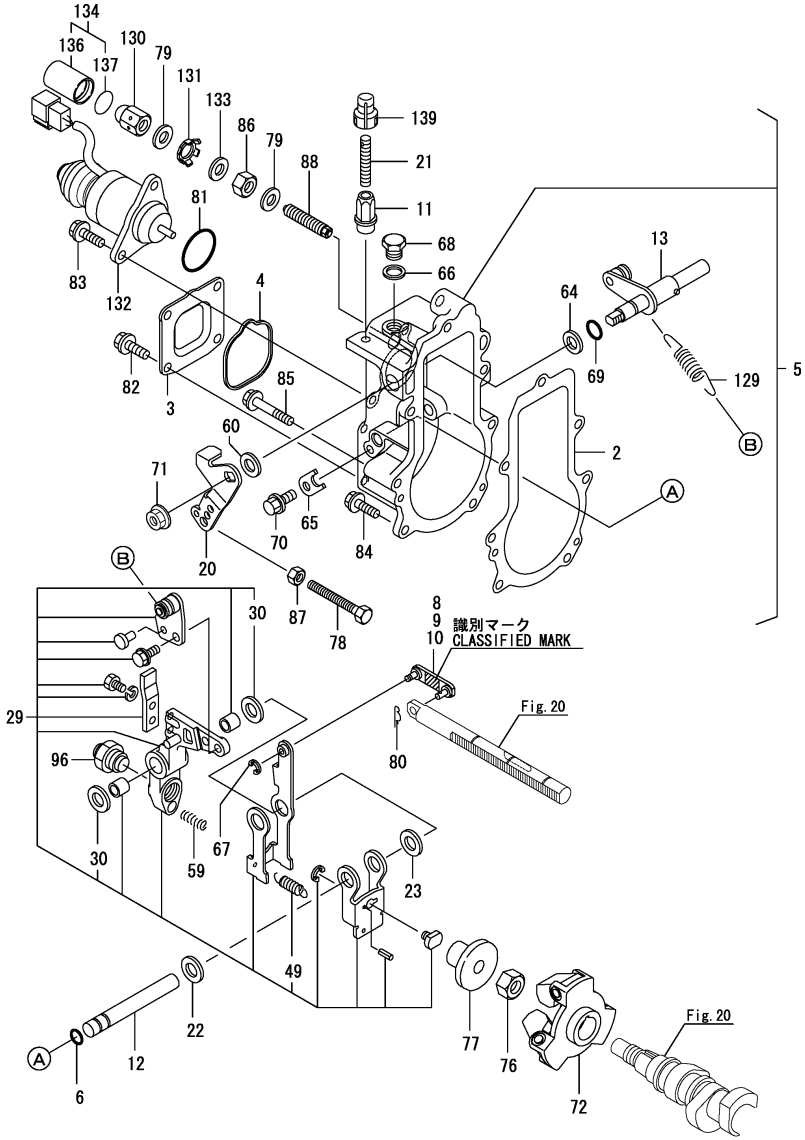

(A)=3YM20 (D)=
(B)= (E)=
(C)= (F)=

No.	Lev.	Parts No.	Description	Q'ty (A)	(B)	(C)	(D)	(E)	(F)	I	R
2	2	119717-61050	GASKET	1							
3	2	119717-61060	COVER, GOVERNOR CASE	1							
4	2	119717-61070	GASKET	1							
5	2	119717-61100	CASE ASSY, GOVERNOR	1							
6	3	129155-51280	O-RING, S6	1							
8	3	119717-61120	LINK, MARK :3	1							1
9	3	119717-61130	LINK, MARK 98	1							1
10	3	119717-61140	LINK, MARK 88	1							1
10A	3	119717-61150	LINK, MARK 03	1						W	1
	(A=E/#E00101)										
11	3	129209-61370	NUT, ARB M6	1							
12	3	129052-61390	SHAFT,GOVERNOR LEVER	1							
13	3	119717-61400	SHAFT ASSY	1							
20	3	119717-61440	LEVER, CONTROL	1							
20-1	3	119515-61440	LEVER, CONTROL	1						N	
	(A=E/#E00432)										
21	3	129155-61450	BOLT, LIMITING	1							
21-1	3	121575-66830	SCREW, ADJUSTING	1						R	
	(A=*2011.05.)										
22	3	129156-61460	SHIM, T=0.6	1							
23	3	129155-61480	SHIM ASSY	1							
29	3	119717-61500	LEVER ASSY, GOVERNOR	1							
30	4	174307-51700	SHIM SET, PLUNGER	2							
49	4	129486-61540	SPRING, GOV.LEVER	1							
59	3	129100-61650	SPRING, FUEL LIMITER	1							
60	3	158552-61700	SHIM SET	1							
64	3	158552-61710	SHIM, T=1.0	1							
65	3	119660-61901	STOPPER, SHAFT	1							
66	3	22190-100002	WASHER, SEAL 10	1							
67	3	22272-000030	RING, E- 3	1							
68	3	23887-100002	PLUG, 10	1							
68-1	3	119717-51930	PLUG, M10	1						R	
	(A=*2011.02.)										
69	3	24341-000070	O-RING, 1AS7.0	1							
70	3	26106-060102	BOLT, M6X 10 PLATED	1							
71	3	26366-080002	NUT, M8	1							
72	2	119717-61200	WEIGHT ASSY,GOVERNOR	1							
72-1	2	119717-61201	WEIGHT ASSY,GOVERNOR	1						R	
	(A=*2009.06.)										
76	2	119660-61300	NUT	1							
76-1	2	129008-61301	NUT	1						R	
	(A=*2007.12.)										
77	2	129155-61341	SLEEVE	1							
78	2	129155-61460	BOLT, LIMITING	1							
78-1	2	129155-61461	BOLT,IDLE LIMIT	1						N	
	(A=*2016.02.)										
79	2	22190-120002	WASHER, SEAL 12	2							
80	2	22372-040000	PIN, SNAP 4	1							
81	2	24341-000280	O-RING, 1AS28.0	1							
81-1	2	158552-61900	O-RING	1						N	
	(A=E/#E03677)										

Remarks
(1)Selective parts.
Certain the classification mark, then place your order(Refer to illustration).
(2)Spare parts.

N:Old $\xleftrightarrow[\text{No}]{\text{Yes}}$ New, Q:Old $\xleftrightarrow[\text{Yes}]{\text{No}}$ New, R:Old $\xleftrightarrow[\text{Yes}]{\text{Yes}}$ New, S:Old $\xleftrightarrow[\text{No}]{\text{No}}$ New, W:Add, Z:Discontinued, F:Interchangeable by set, K:Q'ty Change

++ CONTINUE ++

Copyright (C) 2018 YANMAR CO., LTD. All RightsReserved.

Fig.21. GOVERNOR

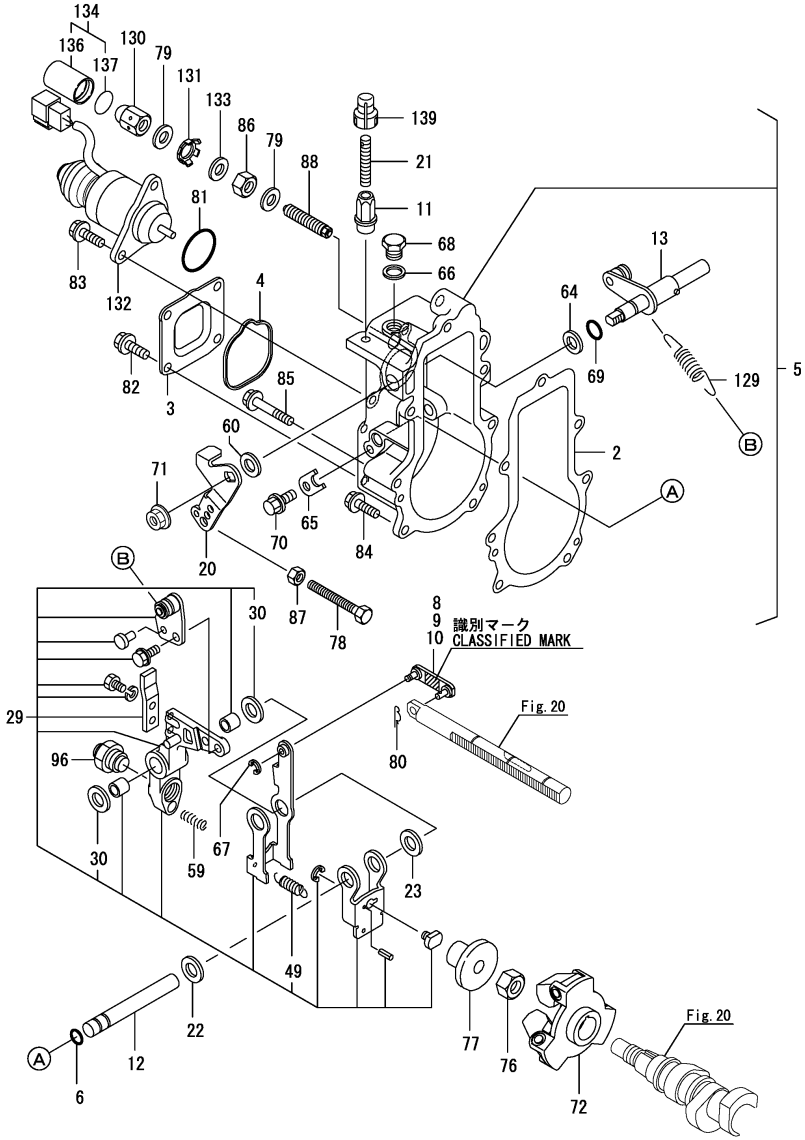

(A)=3YM20 (D)=
(B)= (E)=
(C)= (F)=

No.	Lev.	Parts No.	Description	Q'ty (A)	(B)	(C)	(D)	(E)	(F)	I	R
82	2	26106-060102	BOLT, M6X 10 PLATED	4							
83	2	26106-060142	BOLT, M6X 14 PLATED	2							
84	2	26106-060202	BOLT, M6X 20 PLATED	4							
85	2	26106-060452	BOLT, M6X 45 PLATED	3							
86	2	26736-120002	NUT, M12	1							
86-1	2	129209-61920	NUT, ARB	1						R	
	(A=*2007.11.)										
87	2	26756-060002	NUT, LOCK M6	1							
87-1	2	119740-61470	NUT	1						N	
	(A=*2017.03.)										
88	2	158601-61760	LIMITER ASSY, FUEL	1							
88-1	2	158601-61790	LIMITER ASSY, FUEL	1						S	
	(A=*2012.11.)										
96	2	128990-61560	ANGLEICH ASSY	1							
129	2	119527-61700	SPRING, GOVERNOR	1							
130	2	129209-61930	NUT, CAP	1							
131	2	129209-61970	PLATE	1							
132	2	129271-77950	SOLENOID, STOP	1							
133	2	23414-120016	GASKET, 12X1.0	1							
134	1	129209-61940	CASE ASSY	1							
136	2	129209-61960	CASE	1							2
136-1	2	129209-61961	CASE	1						S	2
	(A=*2007.04.)										
137	2	24311-000150	O-RING, 1AP15.0	1							
137-1	2	24311-000160	O-RING, 1AP16.0	1						S	
	(A=*2007.04.)										
139	1	119285-66650	CAP, HIGH-IDLE	1							2

Remarks
(1)Selective parts.
Certain the classification mark, then place your order(Refer to illustration).
(2)Spare parts.

N:Old $\xleftarrow[\text{No}]{\text{Yes}}$ New, Q:Old $\xleftarrow[\text{Yes}]{\text{No}}$ New, R:Old $\xleftarrow[\text{Yes}]{\text{Yes}}$ New, S:Old $\xleftarrow[\text{No}]{\text{No}}$ New, W:Add, Z:Discontinued, F:Interchangeable by set, K:Q'ty Change

Copyright (C) 2018 YANMAR CO., LTD. All RightsReserved.

Fig.22. FUEL FEED PUMP

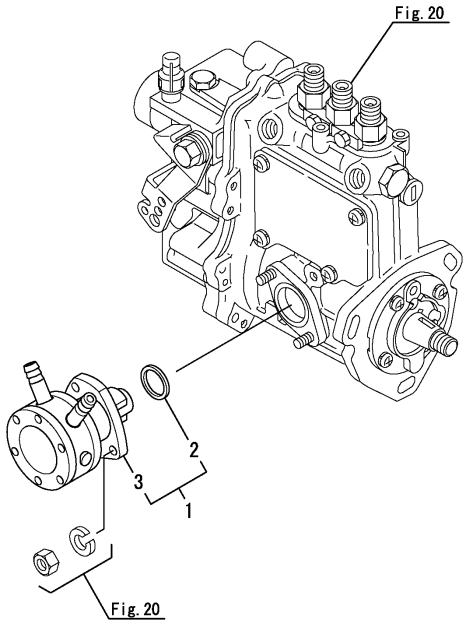

(A)=3YM20 (D)=
(B)= (E)=
(C)= (F)=

No.	Lev.	Parts No.	Description	Q'ty (A)	(B)	(C)	(D)	(E)	(F)	I	R
1	2	129158-52000	PUMP ASSY, FUEL FEED	1							
2	3	129155-52051	GASKET	1							
3	3	129158-52100	PUMP ASSY, FUEL FEED	1							
3-1	3	129158-52101	PUMP ASSY, FUEL FEED	1						N	
	(A=E/#E00968)										

N:Old $\xleftrightarrow[\text{No}]{\text{Yes}}$ New, Q:Old $\xleftrightarrow[\text{Yes}]{\text{No}}$ New, R:Old $\xleftrightarrow[\text{Yes}]{\text{Yes}}$ New, S:Old $\xleftrightarrow[\text{No}]{\text{No}}$ New, W:Add, Z:Discontinued, F:Interchangeable by set, K:Q'ty Change

Copyright (C) 2018 YANMAR CO., LTD. All RightsReserved.

Fig.23. FUEL INJECTION VALVE & FUEL INJECTION PIPE

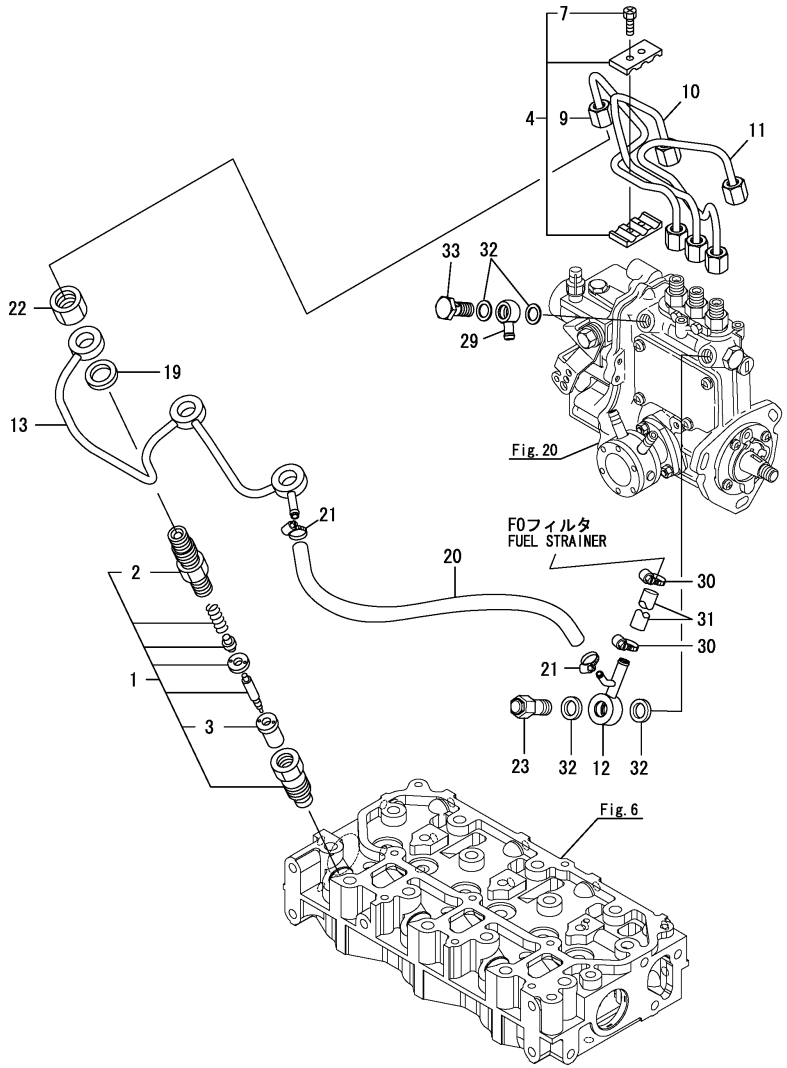

(A)=3YM20 (D)=
(B)= (E)=
(C)= (F)=

No.	Lev.	Parts No.	Description	Q'ty (A)	(B)	(C)	(D)	(E)	(F)	I	R
1	1	119515-53000	VALVE ASSY,INJECTION	3							
1-1	1	119515-53001	VALVE ASSY,INJECTION	3						R	
	(A=*2004.06.)										
2	2	118200-53010	HOLDER, NOZZLE	3							
3	2	119515-53010	NOZZLE ASSY, F.I.	3							
3A	2	129901-53800	SHIM SET, ADJUSTING	3							1
4	1	129150-59120	RETAINER, PIPE	1							
7	2	129150-59131	BOLT, M4X14	2							
9	1	119546-59810	PIPE ASSY, INJECTION	1							
10	1	119546-59820	PIPE ASSY, INJECTION	1							
11	1	119546-59830	PIPE ASSY, INJECTION	1							
12	1	119840-59570	JOINT	1							
13	1	119515-59540	PIPE ASSY, RETURN	1							
19	1	129901-59560	GASKET	3							
20	1	119773-59511	PIPE, FUEL	1							
20-1	1	128990-59510	PIPE,FUEL	1						N	
	(A=E/#E10240)										
21	1	23000-016000	CLAMP, 16	2							
22	1	119620-59700	NUT, NOZZLE	3							
23	1	119813-59950	VALVE ASSY, CHECK	1							
29	1	101304-59020	JOINT, PIPE 12	1							
30	1	23000-016000	CLAMP, 16	2							
30-1	1	23000-013000	CLAMP, HOSE 13	2						N	
	(A=E/#E13624)										
31	1	128890-59040	PIPE, FUEL	1							
31-1	1	128890-59041	PIPE, FUEL OIL	1						R	
	(A=E/#E10240)										
32	1	22190-120002	WASHER, SEAL 12	4							
33	1	103854-39140	BOLT, PIPE JOINT	1							

Remarks
(1)Service parts.

N:Old $\xleftarrow[\text{No}]{\text{Yes}}$ New, Q:Old $\xleftarrow[\text{Yes}]{\text{No}}$ New, R:Old $\xleftrightarrow[\text{Yes}]{\text{Yes}}$ New, S:Old $\xleftrightarrow[\text{No}]{\text{No}}$ New, W:Add, Z:Discontinued, F:Interchangeable by set, K:Q'ty Change

Copyright (C) 2018 YANMAR CO., LTD. All RightsReserved.

Fig.24. FUEL PIPE & FUEL FILTER

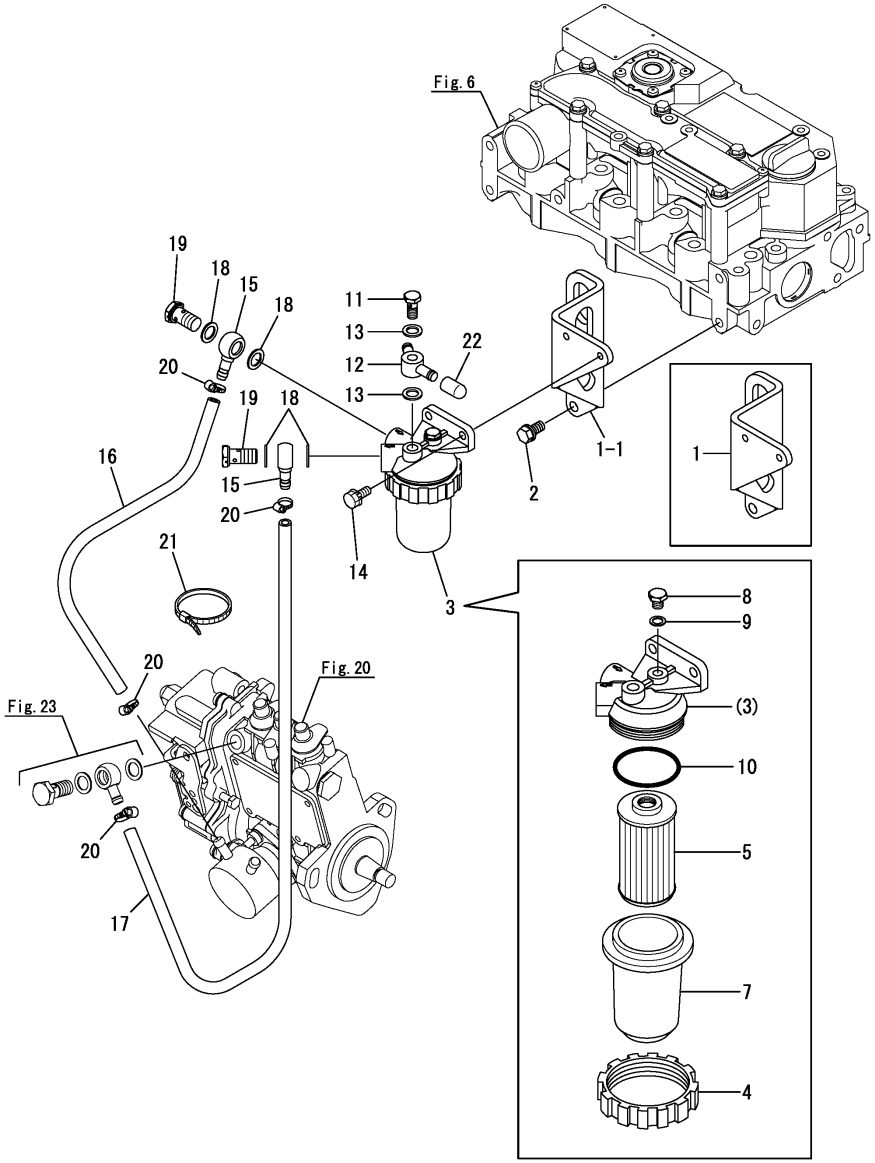

(A)=3YM20 (D)=
(B)= (E)=
(C)= (F)=

No.	Lev.	Parts No.	Description	Q'ty (A)	(B)	(C)	(D)	(E)	(F)	I	R
1	1	128990-55010	BRACKET, FILTER	1							
1-1	1	128990-55011	BRACKET, FILTER	1						N	
	(A=E/#E01209)										
2	1	26106-080162	BOLT, M8X 16 PLATED	2							
3	1	128990-55600	STRAINER ASSY, FUEL	1							
3-1	1	121370-55601	STRAINER ASSY, FUEL	1						R	
	(A=E/#E13624)										
4	2	110250-55610	RING, CUP RETAINING	1							
5	2	104500-55710	ELEMENT	1							
7	2	121370-55730	CUP, STRAINER	1							
8	2	101720-55750	PLUG, HEXAGON M6	1							
9	2	23418-060000	GASKET, 6X1.0	1							
10	2	24341-000440	O-RING, 1AS44.0	1							
11	1	128990-59150	BOLT, PIPE JOINT M8	1							
12	1	128990-59530	JOINT	1							
13	1	22190-080002	WASHER, SEAL 8	2							
14	1	26013-060162	BOLT, M6X 16	2							
15	1	104264-59020	JOINT	2							
16	1	119172-59201	PIPE, FUEL	1							
16-1	1	128990-59200	PIPE,FUEL	1						N	
	(A=E/#E10240)										
17	1	128890-59060	PIPE, FUEL	1							
17-1	1	128890-59061	PIPE,FUEL	1						N	
	(A=E/#E10240)										
18	1	22190-120002	WASHER, SEAL 12	4							
19	1	23857-060000	BOLT, JOINT 6	2							
20	1	23000-016000	CLAMP, 16	4							
21	1	121750-59890	BAND, NYLON	1						W	
	(A=E/#E10240)										
21-1	1	128990-59890	BAND,200	1						R	
	(A=E/#E12342)										
22	1	128990-59900	CAP,FUEL IN-OUT	2						W	
	(A=*2013.08.)										

N:Old $\overset{\text{Yes}}{\underset{\text{No}}{\leftrightarrows}}$ New, Q:Old $\overset{\text{No}}{\underset{\text{Yes}}{\leftrightarrows}}$ New, R:Old $\overset{\text{Yes}}{\underset{\text{Yes}}{\leftrightarrows}}$ New, S:Old $\overset{\text{No}}{\underset{\text{No}}{\leftrightarrows}}$ New, W:Add, Z:Discontinued, F:Interchangeable by set, K:Q'ty Change

Copyright (C) 2018 YANMAR CO., LTD. All RightsReserved.

Fig.48. (24A)WATER SEPARATOR

(A)=3YM20 (D)=
(B)= (E)=
(C)= (F)=

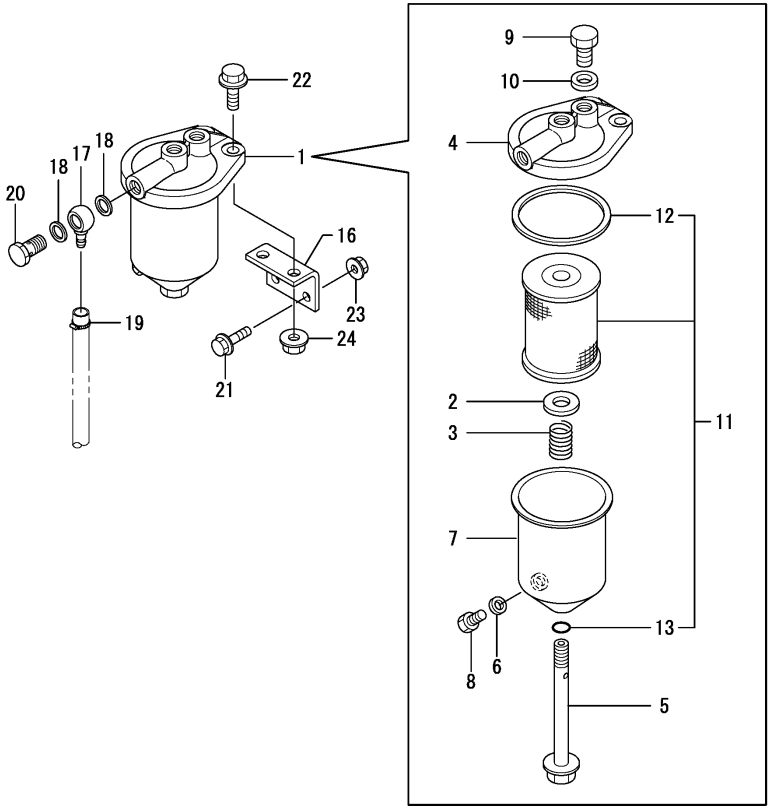

No.	Lev.	Parts No.	Description	Q'ty (A)	(B)	(C)	(D)	(E)	(F)	I	R
1	1	129670-55750	SEPARATOR ASSY,WATER	1						W	
	(A=*2013.05.)										
2	2	123325-35160	WASHER	1							
3	2	123325-35170	SPRING	1							
4	2	129495-55610	BODY, STRAINER	1							
5	2	129495-55620	BOLT	1							
6	2	123672-55760	GASKET	1							
7	2	129065-55760	CASE, SEPARATOR	1							
8	2	129065-55770	PLUG, DRAIN M8	1							
9	2	129065-55800	PLUG, M14	1							
10	2	123678-55890	GASKET, PLUG	1							
11	2	41650-502320	ELEMENT ASSY(D72XL90	1							
12	3	123325-35140	GASKET	1							
13	3	24311-000120	O-RING, 1AP12.0	1							
16	1	129670-55810	BRACKET	1							
17	1	121750-59910	JOINT, BALL	2							
18	1	22190-140002	WASHER, SEAL 14	4							
19	1	23000-013000	CLAMP, 13	2							
20	1	23857-080000	BOLT, JOINT 8	2							
21	1	26106-080302	BOLT, M8X 30 PLATED	2							
22	1	26106-100302	BOLT, M10X 30 PLATED	2							
23	1	26366-080002	NUT, 8	2							
24	1	26366-100002	NUT, 10	2							

N:Old $\xleftarrow[\text{No}]{\text{Yes}}$ New, Q:Old $\xleftarrow[\text{Yes}]{\text{No}}$ New, R:Old $\xleftarrow[\text{Yes}]{\text{Yes}}$ New, S:Old $\xleftarrow[\text{No}]{\text{No}}$ New, W:Add, Z:Discontinued, F:Interchangeable by set, K:Q'ty Change

Copyright (C) 2018 YANMAR CO., LTD. All RightsReserved.

Fig.25. FUEL TANK(OPTIONAL)

(A)=3YM20
(B)=
(C)=
(D)=
(E)=
(F)=

No.	Lev.	Parts No.	Description	Q'ty (A)	(B)	(C)	(D)	(E)	(F)	I	R
1	1	128990-59700	PIPE ASSY, FUEL	1							
2	2	128990-59130	PIPE, FUEL	1							
2-1	2	128990-59131	PIPE, FUEL	1						S	
	(A=*2004.04.)										
4	2	138603-59380	CAP NUT	1							
5	2	23010-014000	CLAMP, 14	2							
7	1	83213-003012	TANK ASSY, FUEL OIL	1							
8	2	105430-55041	CAP ASSY	1							

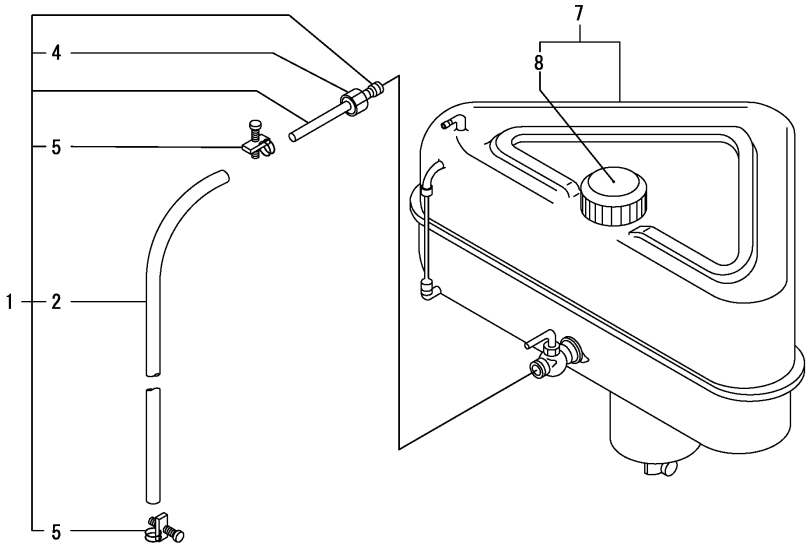

N:Old $\xleftrightarrow[\text{No}]{\text{Yes}}$ New, Q:Old $\xleftrightarrow[\text{Yes}]{\text{No}}$ New, R:Old $\xleftrightarrow[\text{Yes}]{\text{Yes}}$ New, S:Old $\xleftrightarrow[\text{No}]{\text{No}}$ New, W:Add, Z:Discontinued, F:Interchangeable by set, K:Q'ty Change

Copyright (C) 2018 YANMAR CO., LTD. All RightsReserved.

Fig.26. BRACKET(CABLE)

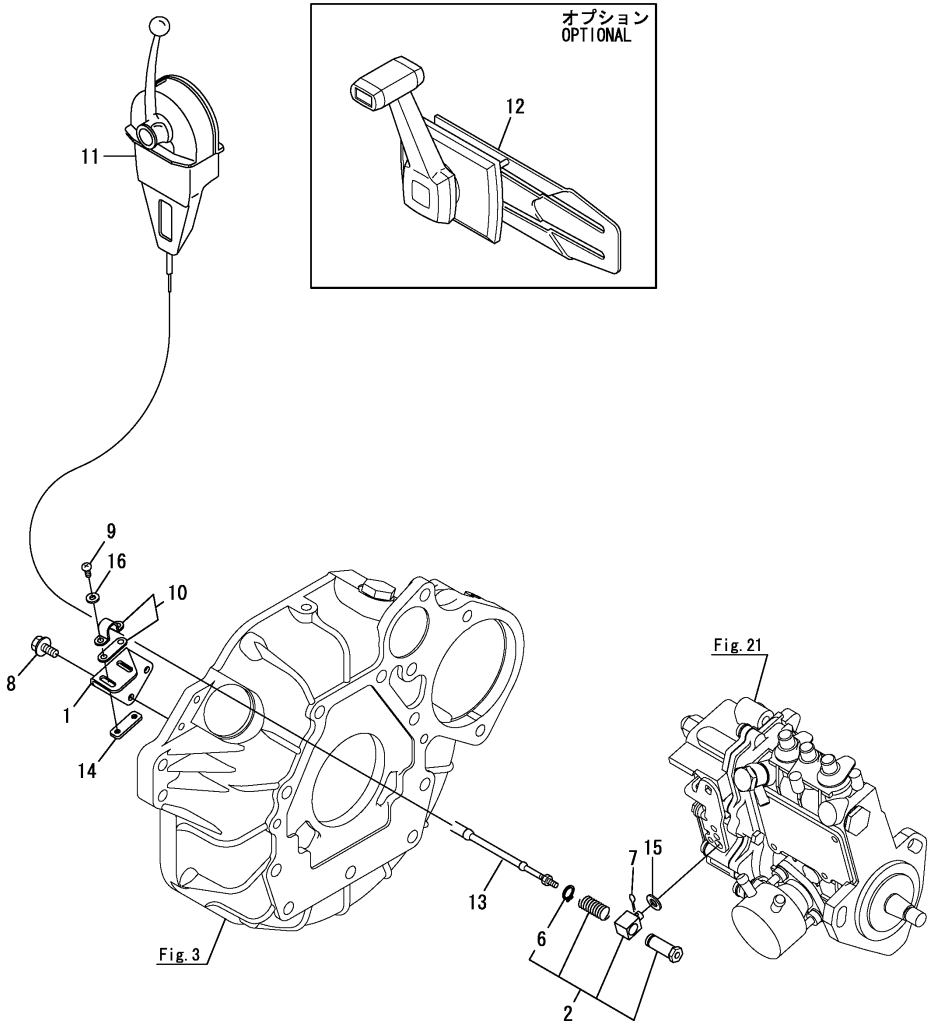

(A)=3YM20 (D)=
(B)= (E)=
(C)= (F)=

No.	Lev.	Parts No.	Description	Q'ty (A)	(B)	(C)	(D)	(E)	(F)	I	R
1	1	128990-67150	BRACKET, CABLE	1							
2	1	129470-67200	RETAINER ASSY	1							
6	2	22242-000100	RING, 10	1							
7	1	22360-080000	SNAP PIN 8	1							
7-1	1	22414-250150	PIN, 2.5 X 15	1						N	
	(A=E/#E13624)										
8	1	26106-060122	BOLT, M6X 12 PLATED	2							
9	1	26557-050122	SCREW, M5X12	2							
9-1	1	26557-050202	SCREW, M5X20	2						R	
	(A=E/#E11906)										
10	1	41710-000410	CLAMP	1							
11	1	41730-000681	MT-3 REMO-CON	1							
12	1	128170-86501	REMOCON HEAD (MN	1							
13	1	41710-000380	CABLE, PP 33CX4M	2							
13-1	1	27730-301400	CABLE, 33 X 1400	2						R	
	(A=*2012.09.)										
14	1	121574-86320	RETAINER	1							
15	1	22117-080000	WASHER, 8	1						W	
	(A=E/#E13624)										
16	1	22217-050000	WASHER, 5	2						W	
	(A=*2013.08.)										

N:Old $\xleftarrow[\text{No}]{\text{Yes}}$ New, Q:Old $\xleftarrow[\text{Yes}]{\text{No}}$ New, R:Old $\xleftarrow[\text{Yes}]{\text{Yes}}$ New, S:Old $\xleftarrow[\text{No}]{\text{No}}$ New, W:Add, Z:Discontinued, F:Interchangeable by set, K:Q'ty Change

Copyright (C) 2018 YANMAR CO., LTD. All RightsReserved.

Fig.27. CLUTCH

.

この項目には、イラスト表現はしていません。
The parts of this figure are not illustrated.

(A)=3YM20 (D)=
(B)= (E)=
(C)= (F)=

No.	Lev.	Parts No.	Description	Q'ty (A)	(B)	(C)	(D)	(E)	(F)	I	R
1	1	128171-81520	CLUTCH ASSY, I=2.62	1							
2	1	128171-81510	CLUTCH ASSY, 2.21	1							
3	1	128171-81530	CLUTCH ASSY, I=3.22	1							
4	1	26106-080422	BOLT, M8X 42 PLATED	7							
4-1	1	26106-080402	BOLT, M8X 40 PLATED	7						R	
	(A=*2008.03.)										
5	1	26216-080452	STUD, M8X 45	1							
6	1	26366-080002	NUT, M8	1							

N:Old $\xleftrightarrow[\text{No}]{\text{Yes}}$ New, Q:Old $\xleftrightarrow[\text{Yes}]{\text{No}}$ New, R:Old $\xleftrightarrow[\text{Yes}]{\text{Yes}}$ New, S:Old $\xleftrightarrow[\text{No}]{\text{No}}$ New, W:Add, Z:Discontinued, F:Interchangeable by set, K:Q'ty Change

Copyright (C) 2018 YANMAR CO., LTD. All RightsReserved.

Fig.28. CLUTCH REMOTE CONTROL

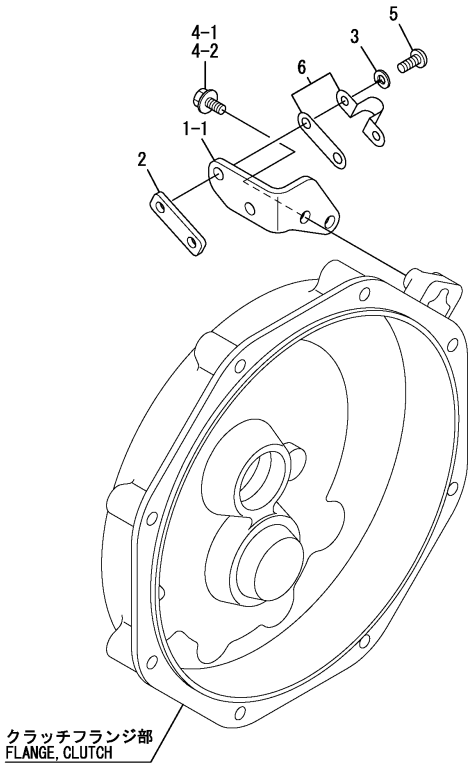

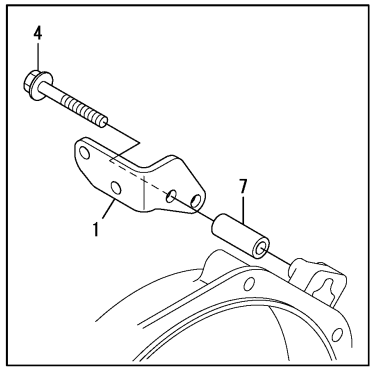

(A)=3YM20 (D)=
(B)= (E)=
(C)= (F)=

No.	Lev.	Parts No.	Description	Q'ty (A)	(B)	(C)	(D)	(E)	(F)	I	R
1	1	128990-86301	BRACKET, CABLE	1							
1-1	1	128990-86310	BRACKET, CABLE	1						F	1
	(A=E/#E12516)										
2	1	121574-86320	RETAINER	1							
3	1	22212-050000	WASHER 5	2							
3-1	1	22217-050000	WASHER, 5	2						R	
	(A=*2013.08.)										
4	1	26106-060452	BOLT, M6X 45 PLATED	2							
4-1	1	26106-060142	BOLT, M6X 14 PLATED	2						F	1
	(A=E/#E12516)										
4-2	1	26106-060122	BOLT, M6X 12 PLATED	2						R	
	(A=*2008.03.)										
5	1	26557-050122	SCREW, M5X12	2							
5-1	1	26557-050202	SCREW, M5X20	2						R	
	(A=E/#E11906)										
6	1	41710-000410	CLAMP	1							
7	1	128990-86350	SPACER	2						Z	
	(A=E/#E12516)										

Remarks
(1)No.1-1 & 4-1 interchangeable by set.

N:Old $\overset{\text{Yes}}{\underset{\text{No}}{\leftrightarrow}}$ New, Q:Old $\overset{\text{No}}{\underset{\text{Yes}}{\leftrightarrow}}$ New, R:Old $\overset{\text{Yes}}{\underset{\text{Yes}}{\leftrightarrow}}$ New, S:Old $\overset{\text{No}}{\underset{\text{No}}{\leftrightarrow}}$ New, W:Add, Z:Discontinued, F:Interchangeable by set, K:Q'ty Change

Copyright (C) 2018 YANMAR CO., LTD. All RightsReserved.

Fig.29. COUPLING(OPTIONAL)

(A)=3YM20 (D)=
(B)= (E)=
(C)= (F)=

テーパカップリング
TAPER COUPLING

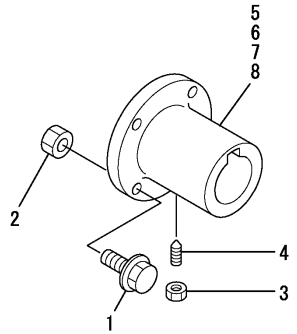

ストレートカップリング
STRAIGHT COUPLING

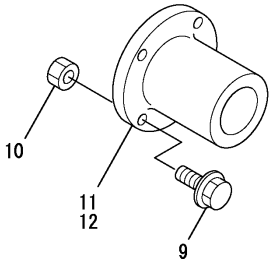

スリットカップリング
SLIT COUPLING

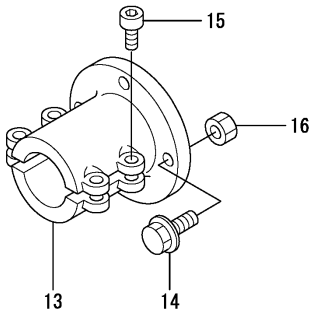

No.	Lev.	Parts No.	Description	Q'ty (A)	(B)	(C)	(D)	(E)	(F)	I	R
1	1	26106-100322	BOLT, M10X 32 PLATED	4							
2	1	26706-100002	NUT, M10	4							
3	1	26756-080002	NUT, LOCK M8	1							
4	1	48110-032411	SCREW	1							
5	1	48110-522361	COUPLING, TAPER 22	1							
6	1	48110-025063	COUPLING, TAPER 25	1							
7	1	48110-028063	COUPLING, TAPER 28	1							
8	1	48110-032502	COUPLING, 30	1							
9	1	26106-100322	BOLT, M10X 32 PLATED	4							
10	1	26706-100002	NUT, M10	4							
11	1	45414-500260	COUPLING, 16MM	1							
12	1	105583-85900	COUPLING, 22	1							
13	1	104214-83980	COUPLING, SLIT 20	1							
14	1	26106-100322	BOLT, M10X 32 PLATED	4							
15	1	26450-080282	BOLT, M8X 28	4							
16	1	26706-100002	NUT, M10	4							

N:Old $\xleftrightarrow[\text{No}]{\text{Yes}}$ New, Q:Old $\xleftrightarrow[\text{Yes}]{\text{No}}$ New, R:Old $\xleftrightarrow[\text{Yes}]{\text{Yes}}$ New, S:Old $\xleftrightarrow[\text{No}]{\text{No}}$ New, W:Add, Z:Discontinued, F:Interchangeable by set, K:Q'ty Change

Copyright (C) 2018 YANMAR CO., LTD. All RightsReserved.

Fig.30. STARTER MOTOR

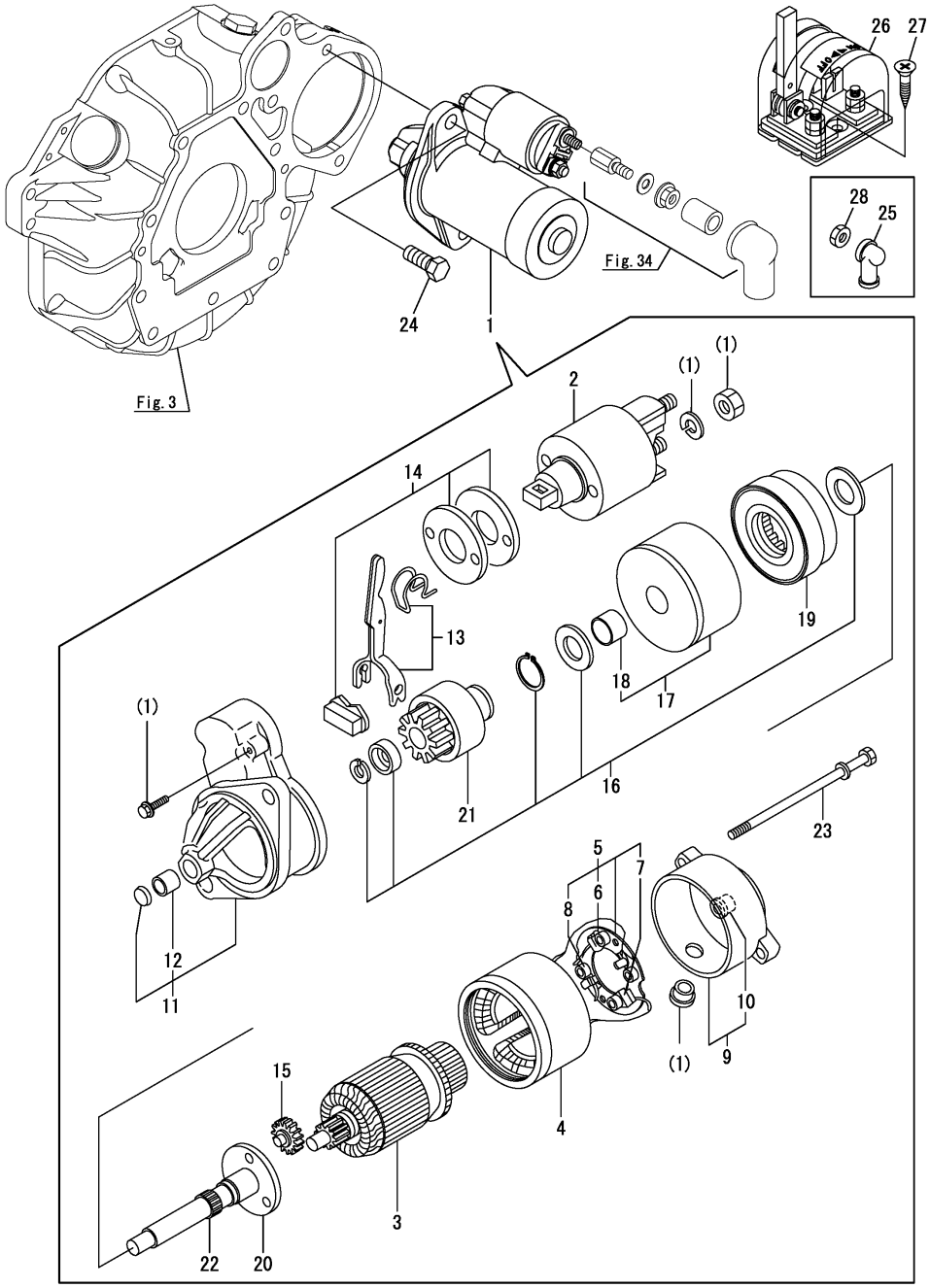

(A)=3YM20 (D)=
(B)= (E)=
(C)= (F)=

No.	Lev.	Parts No.	Description	Q'ty (A)	(B)	(C)	(D)	(E)	(F)	I	R
1	1	129608-77010	STARTER ASSY	1							
2	2	129698-77020	SWITCH ASSY, MAGNET	1							
3	2	129698-77101	ARMATURE ASSY	1							
4	2	129608-77110	YOKE ASSY	1							
5	2	129698-77120	HOLDER ASSY, BRUSH	1							
6	3	129698-77140	BRUSH SET	1							
7	3	129698-77130	BRUSH	2							
8	3	129698-77150	SPRING, BRUSH	4							
9	2	129698-77161	COVER ASSY	1							
10	3	129698-77170	BEARING, COVER	1							
11	2	129698-77260	CASE ASSY, GEAR	1							
12	3	X2114535200	BEARING, STARTER	1							
13	2	129698-77270	LEVER SET, SHIFT	1							
14	2	129698-77280	COVER KIT, DUST	1							
15	2	129698-77240	GEAR, PLANETARY	3							
16	2	129698-77250	WASHER SET	1							
17	2	129698-77180	BRACKET, CENTER	1							
18	3	129698-77190	BRACKET, CENTER	1							
19	2	129698-77200	GEAR, INTERNAL	1							
20	2	129698-77210	BRACKET	1							
21	2	129698-77220	PINION ASSY	1							
22	2	129698-77230	SHAFT, PINION	1							
23	2	124195-77770	BOLT, THROUGH	2							
24	1	26116-120302	BOLT, M12X 30 PLATED	2							
25	1	124550-77030	COVER, TERMINAL	1							
25-1	1	129670-77030	COVER, TERMINAL	1							R
	(A=*2008.02.)										
25-2	1	129670-77030	COVER, TERMINAL	1							Z
	(A=E/#E14902)										
26	1	123310-77640	SWITCH, BATTERY	1							
27	1	22724-800380	SCREW, 8.0X38	2							
28	1	26756-080002	NUT, LOCK M8	1							Z
	(A=E/#E14902)										

N:Old $\xleftarrow[\text{No}]{\text{Yes}}$ New, Q:Old $\xleftarrow[\text{Yes}]{\text{No}}$ New, R:Old $\xleftarrow[\text{Yes}]{\text{Yes}}$ New, S:Old $\xleftarrow[\text{No}]{\text{No}}$ New, W:Add, Z:Discontinued, F:Interchangeable by set, K:Q'ty Change

Copyright (C) 2018 YANMAR CO., LTD. All RightsReserved.

Fig.31. GENERATOR(HITACHI/60A)(UP TO SEP. 2010)

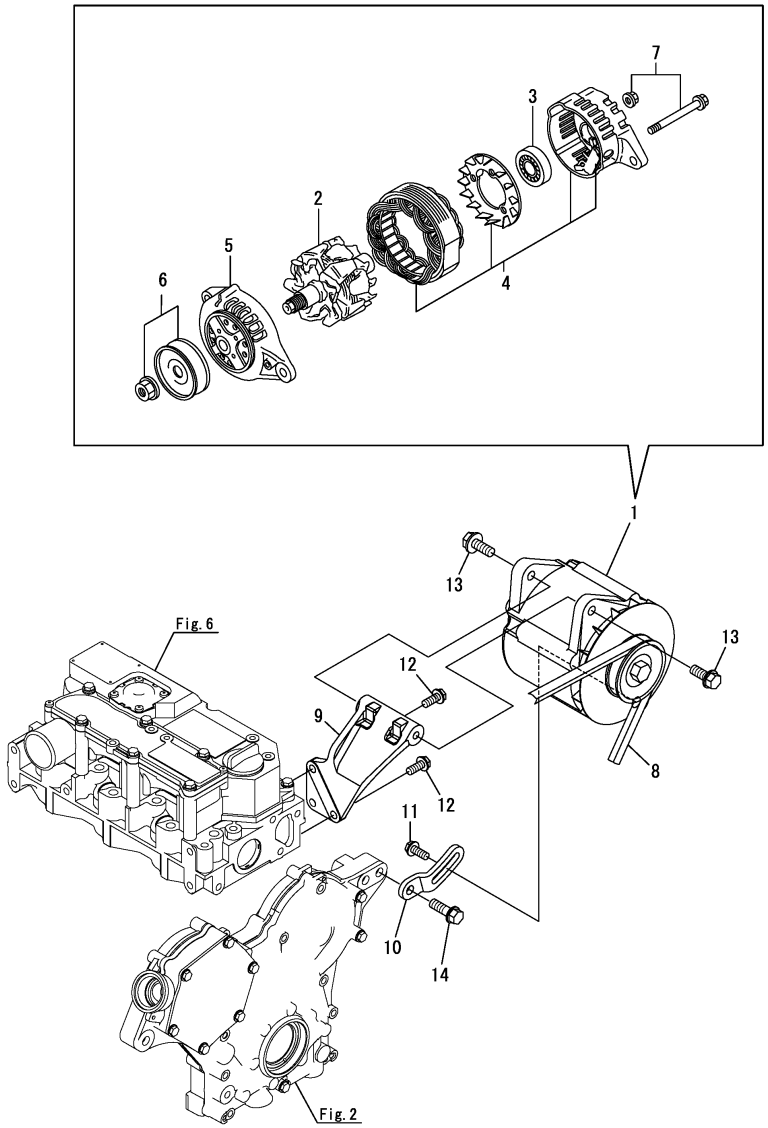

(A)=3YM20 (D)=
(B)= (E)=
(C)= (F)=

No.	Lev.	Parts No.	Description	Q'ty (A)	(B)	(C)	(D)	(E)	(F)	I	R
1	1	128271-77200	GENERATOR, 12V-60A	1						Z	
	(A=E/#E08826)										
2	2	123900-77700	ROTOR ASSY	1							
3	2	129612-77710	BEARING, BALL	1							
4	2	128271-77720	BRACKET(STATOR+REGUL	1							
5	2	123900-77730	BRACKET ASSY	1							
6	2	128271-77740	PULLEY	1							
7	2	128271-77750	SCREW KIT	1							
8	1	119831-42290	V-BELT, A37.5	1							
8-1	1	129612-42290	V-BELT, A37.5	1							R
	(A=E/#E11906)										
8-2	1	129612-42290	V-BELT, A37.5	1						Z	
	(A=E/#E08826)										
9	1	128890-77310	BRACKET	1						Z	
	(A=E/#E08826)										
10	1	128990-77330	ADJUSTER	1						Z	
	(A=E/#E08826)										
11	1	26106-080202	BOLT, M8X 20 PLATED	1						Z	
	(A=E/#E08826)										
12	1	26106-080252	BOLT, M8X 25 PLATED	3						Z	
	(A=E/#E08826)										
13	1	26106-100252	BOLT, M10X 25 PLATED	2						Z	
	(A=E/#E08826)										
14	1	26106-100302	BOLT, M10X 30 PLATED	1						Z	
	(A=E/#E08826)										

Remarks
* This item wus abolished.
* Refer to Fig.42 for the combination of generator, wire harness, and panel.

N:Old $\xleftrightarrow[\text{No}]{\text{Yes}}$ New, Q:Old $\xleftrightarrow[\text{Yes}]{\text{No}}$ New, R:Old $\xleftrightarrow[\text{Yes}]{\text{Yes}}$ New, S:Old $\xleftrightarrow[\text{No}]{\text{No}}$ New, W:Add, Z:Discontinued, F:Interchangeable by set, K:Q'ty Change

Copyright (C) 2018 YANMAR CO., LTD. All RightsReserved.

Fig.32. GENERATOR(HITACHI/80A)(UP TO E/#E11905)

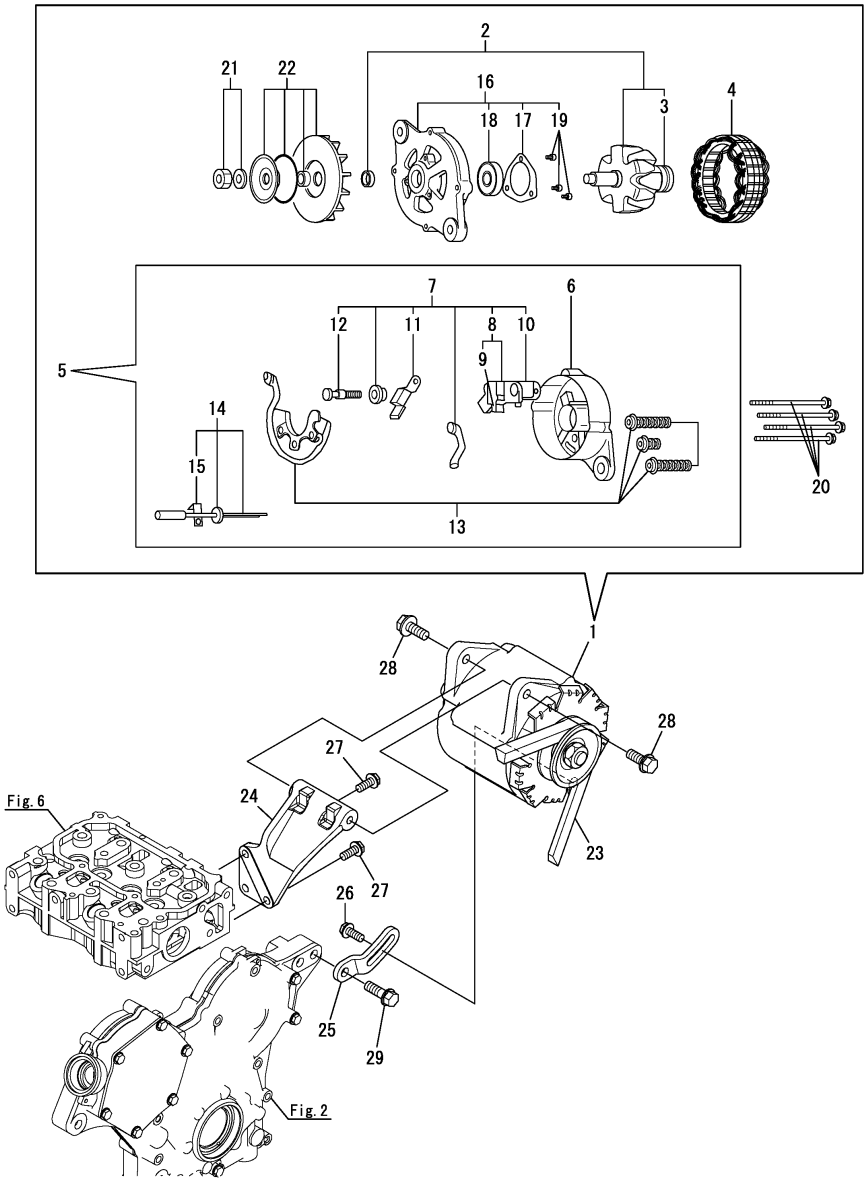

(A)=3YM20 (D)=
(B)= (E)=
(C)= (F)=

No.	Lev.	Parts No.	Description	Q'ty (A)	(B)	(C)	(D)	(E)	(F)	I	R
1	1	119573-77201	ALTERNATER(12V-80A	1							
2	2	XL180G61000	ROTOR ASSY	1							
3	3	119129-77320	BEARING, BALL	1							
4	2	XL180120000	STATOR ASSY	1							
5	2	XL180G63006	COVER ASSY, REAR	1							
6	3	XL180G13012	COVER, REAR	1							
7	3	XL180G43150	BRUSH ASSY,REGULATOR	1							
8	4	XL155G1330	BRUSH ASSY	1							
9	5	XL225G1325	BRUSH SET	2							
10	4	124080-77390	REGULATOR ASSY	1							
11	4	XL225431800	CONDENSER ASSY	1							
12	4	124080-77520	BOLT M5	2							
13	3	XL1808320	DIODE ASY	1							
14	3	119129-77250	WIRE, LEAD	1							
15	4	119129-77260	CLAMP	1							
16	2	XL235340110	COVER ASSY, FRONT	1							
17	3	XL150M14041	RETAINER	1							
18	3	X6303BM0000	BEARING, BALL	1							
19	3	119129-77930	SCREW KIT	1							
20	2	119129-77890	BOLT, THROUGH	4							
21	2	119129-77900	NUT ASSY, PULLEY	1							
22	2	XL180G85001	PULLEY ASSY	1							
23	1	119831-42290	V-BELT, A37.5	1							
23-1	1	129612-42290	V-BELT, A37.5	1							R
	(A=E/#E11906)										
24	1	128890-77310	BRACKET	1							
25	1	128990-77330	ADJUSTER	1							
26	1	26106-080202	BOLT, M8X 20 PLATED	1							
27	1	26106-080252	BOLT, M8X 25 PLATED	3							
28	1	26106-100252	BOLT, M10X 25 PLATED	2							
29	1	26106-100302	BOLT, M10X 30 PLATED	1							

Remarks
* This item is applicable to [(A)=E/#E11905] or previous machines(Refer to Fig.41).
* Refer to Fig.42 for the combination of generator, wire harness, and panel.

N:Old $\frac{\text{Yes}}{\text{No}}$ New, Q:Old $\frac{\text{No}}{\text{Yes}}$ New, R:Old $\frac{\text{Yes}}{\text{Yes}}$ New, S:Old $\frac{\text{No}}{\text{No}}$ New, W:Add, Z:Discontinued, F:Interchangeable by set, K:Q'ty Change

Copyright (C) 2018 YANMAR CO., LTD. All RightsReserved.

Fig.41. (32A)GENERATOR(VALEO)(FROM E/#E11906)

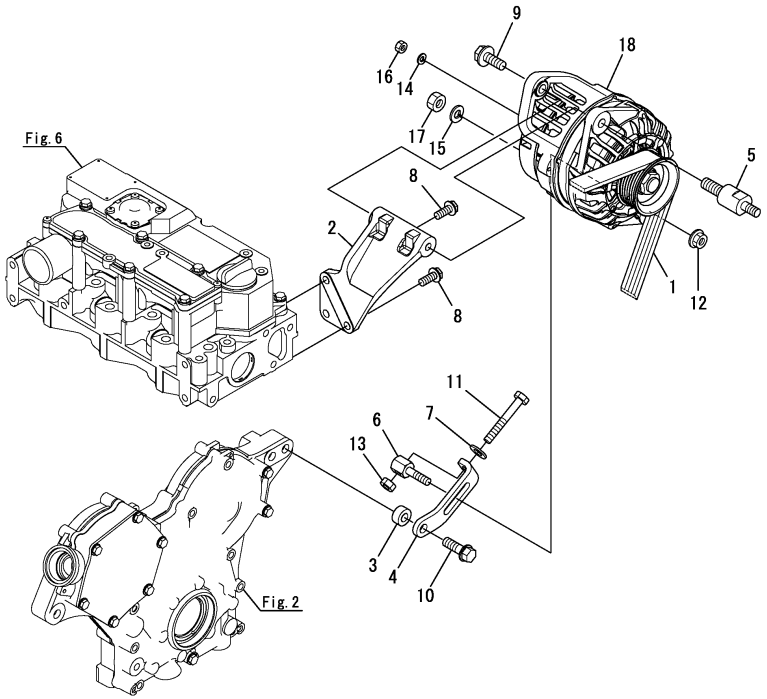

(A)=3YM20 (D)=
(B)= (E)=
(C)= (F)=

No.	Lev.	Parts No.	Description	Q'ty (A)	(B)	(C)	(D)	(E)	(F)	I	R
1	1	128790-77580	BELT,ALTERNATOR 6PK	1							
2	1	128890-77310	BRACKET	1							
3	1	128990-77320	SPACER,ADJUSTER	1							
4	1	128990-77341	ADJUSTER, BELT	1							
5	1	128990-77410	BOLT	1							
6	1	129271-77641	BOLT,ADJUSTER	1							
7	1	22137-080000	WASHER, 8	1							
8	1	26106-080252	BOLT, M8X 25 PLATED	3							
9	1	26106-100302	BOLT, M10X 30 PLATED	1							
10	1	26106-100402	BOLT, M10X 40 PLATED	1							
11	1	26116-080604	BOLT, M8X 60 PLATED	1							
12	1	26366-080002	NUT, M8	1							
13	1	26716-080002	NUT, M8	1							
14	1	22217-050000	WASHER, SPRING 5	2							
15	1	22217-080000	WASHER, SPRING 8	1							
16	1	26716-050002	NUT, M5	2							
17	1	26716-080002	NUT, M8	1							
17-1	1	26756-080002	NUT, 8	1						N	
	(A=E/#E13624)										
18	1	128990-77250	ALTERNATOR,12V-120A	1						W	1
	(A=E/#E11906)										

Remarks
* This item is applicable to [(A)=E/#E11906] or following machines(Refer to Fig.32).
* Refer to Fig.42 for the combination of generator, wire harness, and panel.
(1)Inner parts are shown in Fig.44.

N:Old ◄Yes/No► New, Q:Old ◄No/Yes► New, R:Old ◄Yes/Yes► New, S:Old ◄No/No► New, W:Add, Z:Discontinued, F:Interchangeable by set, K:Q'ty Change

Copyright (C) 2018 YANMAR CO., LTD. All RightsReserved.

Fig.44. (32B)GENERATOR(INNER PARTS)

(A)=3YM20
(B)=
(C)=
(D)=
(E)=
(F)=

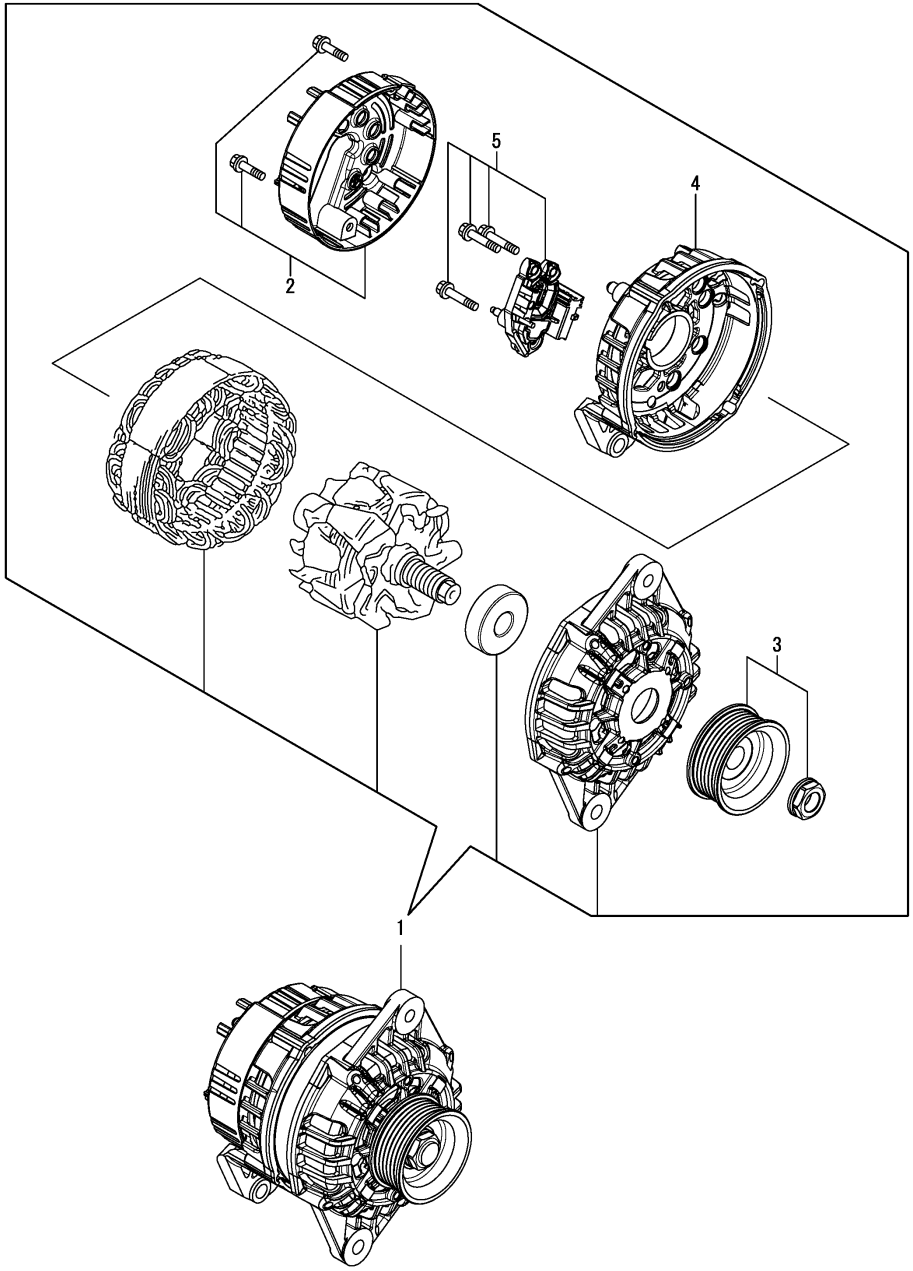

No.	Lev.	Parts No.	Description	Q'ty (A)	(B)	(C)	(D)	(E)	(F)	I	R
1	1	128990-77250	ALTERNATOR,12V-125A	1							
2	2	128990-77700	COVER, REAR	1							
3	2	128990-77730	PULLEY	1							
4	2	128990-77770	RECTIFIER,12V BRACKE	1							
5	2	128990-77780	REGULATOR,12V SCREW	1							

N:Old $\xleftrightarrow[\text{No}]{\text{Yes}}$ New, Q:Old $\xleftrightarrow[\text{Yes}]{\text{No}}$ New, R:Old $\xleftrightarrow[\text{Yes}]{\text{Yes}}$ New, S:Old $\xleftrightarrow[\text{No}]{\text{No}}$ New, W:Add, Z:Discontinued, F:Interchangeable by set, K:Q'ty Change

Copyright (C) 2018 YANMAR CO., LTD. All RightsReserved.

Fig.33. COVER(V-BELT)

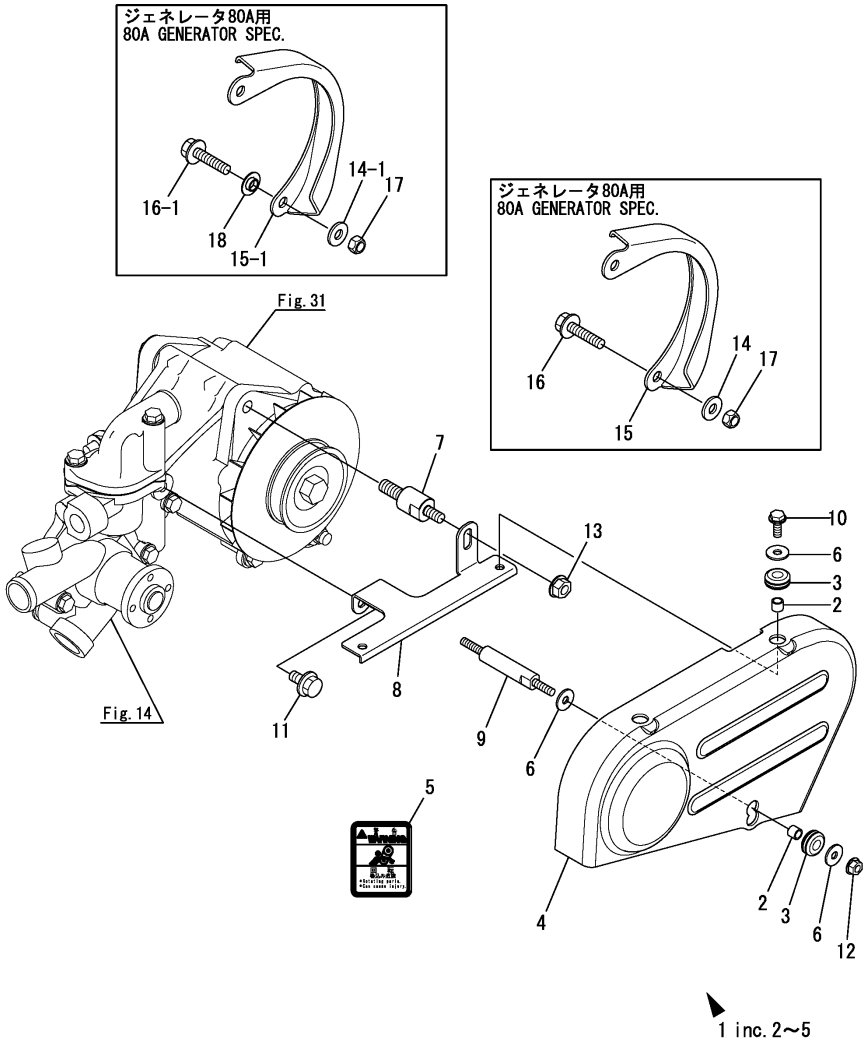

(A)=3YM20 (D)=
(B)= (E)=
(C)= (F)=

No.	Lev.	Parts No.	Description	Q'ty (A)	(B)	(C)	(D)	(E)	(F)	I	R
1	1	128990-77460	COVER,BELT CMP	1						W	
	(A=E/#E13624)										
2	2	128990-77440	COLLAR	3							
2-1	2	128990-77441	COLLAR, M6	3						N	
	(A=E/#E13624)										
3	2	120270-67120	GROMMET	3							
3-1	2	128990-77600	GROMMET	3						R	
	(A=E/#E13624)										
4	2	128990-77480	COVER	1						W	
	(A=E/#E00184)										
5	2	128377-07350	LABEL, CAUTION	1						W	
	(A=E/#E13624)										
6	1	128990-77510	WASHER	4							
7	1	128990-77410	BOLT	1						Z	
	(A=E/#E11906)										
8	1	128990-77450	BRACKET	1							
9	1	128990-77470	BOLT	1							
10	1	26106-060162	BOLT, M6X 16 PLATED	2							
11	1	26106-080162	BOLT, M8X 16 PLATED	1							
12	1	26366-060002	NUT, M6	1							
13	1	26366-080002	NUT, M8	1							
14	1	128990-77500	WASHER	1							
14-1	1	128990-77500	WASHER	2						K	
	(A=E/#E08826)										
14-2	1	128990-77500	WASHER	2						Z	
	(A=E/#E11906)										
15	1	128990-77490	COVER	1						W	
	(A=E/#E00184)										
15-1	1	128990-77491	COVER	1						N	
	(A=E/#E08826)										
15-2	1	128990-77491	COVER	1						Z	
	(A=E/#E11906)										
16	1	26106-080352	BOLT, M8X 35 PLATED	1							
16-1	1	26106-080354	BOLT, M8X 35 PLATED	1						N	
	(A=E/#E08826)										
16-2	1	26106-080354	BOLT, M8X 35 PLATED	1						Z	
	(A=E/#E11906)										
17	1	26986-080002	NUT, LOCK M8	2						Z	
	(A=E/#E11906)										
18	1	128990-77540	SPACER	2						W	
	(A=E/#E08826)										
18-1	1	128990-77540	SPACER	2						Z	
	(A=E/#E11906)										

N:Old $\overset{\text{Yes}}{\underset{\text{No}}{\leftrightarrow}}$ New, Q:Old $\overset{\text{No}}{\underset{\text{Yes}}{\leftrightarrow}}$ New, R:Old $\overset{\text{Yes}}{\underset{\text{Yes}}{\leftrightarrow}}$ New, S:Old $\overset{\text{No}}{\underset{\text{No}}{\leftrightarrow}}$ New, W:Add, Z:Discontinued, F:Interchangeable by set, K:Q'ty Change

Copyright (C) 2018 YANMAR CO., LTD. All RightsReserved.

Fig.34. WIRE HARNESS & RELAY

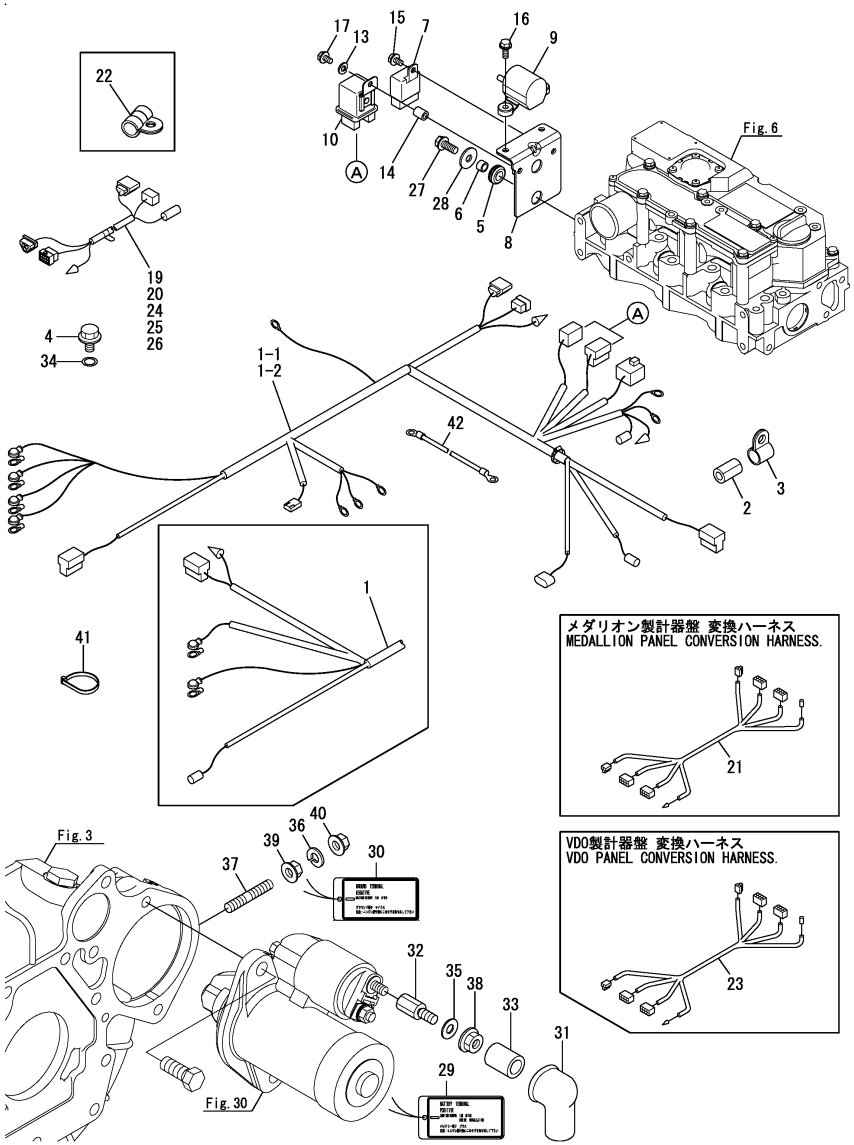

Remarks
* Refer to Fig.42 for the combination of generator, wire harness, and panel.
(1)It is made by YAZAKI.
(2)It is made by DEUTSCH : VALEO generator specification.
(3)For MEDALLION.
(4)For VDO : VALEO generator specification.
(5)No.1-2 & 42 interchangeable by set.

(A)=3YM20 (D)=
(B)= (E)=
(C)= (F)=

No.	Lev.	Parts No.	Description	Q'ty (A)	(B)	(C)	(D)	(E)	(F)	I	R
1	1	128990-77920	HARNESS, WIRE	1							1
1-1	1	128990-77921	HARNESS, WIRE ENGINE	1						S	2
	(A=E/#E11906)										
1-2	1	128990-77922	HARNESS, WIRE ENGINE	1						F	5
	(A=E/#E14030)										
2	1	124770-77940	PROTECTOR	1							
2-1	1	129670-77940	PROTECTOR	1						R	
	(A=*2007.11.)										
2-2	1	129670-77940	PROTECTOR	1						Z	
	(A=E/#E11906)										
3	1	124070-77950	CLAMP	1							
3-1	1	121575-49310	RETAINER, PIPE	1						R	
	(A=E/#E11906)										
3-2	1	121575-49310	RETAINER, PIPE	1						Z	
	(A=E/#E11906)										
4	1	26106-080142	BOLT, M8X 14 PLATED	1							
4-1	1	26106-080122	BOLT, 8 X 12	1						N	
	(A=E/#E14902)										
5	1	105100-55501	ABSORBER	2							
5-1	1	128990-77610	GROMMET	2						R	
	(A=E/#E13624)										
6	1	128990-77430	COLLAR	2							
7	1	119247-77100	RELAY, POWER	1							
8	1	128890-77400	BRACKET, RELAY	1							
9	1	120270-77511	RELAY, MAGNETIC	1							
9-1	1	128990-77550	RELAY, MAGNETIC	1						N	
	(A=E/#E13624)										
10	1	128990-77910	RELAY, GROW	1							
10-1	1	128990-77911	RELAY ASSY, GLOW	1						N	
	(A=*2010.12.)										
13	1	22217-060000	WASHER, 6	1							
14	1	128990-42180	COLLAR	1							
15	1	26106-060102	BOLT, M6X 10 PLATED	1							
16	1	26106-060162	BOLT, M6X 16 PLATED	2							
17	1	26106-060252	BOLT, M6X 25 PLATED	1							
19	1	128391-77700	HARNESS, WIRE	1							
20	1	128391-77720	HARNESS, WIRE	1							
21	1	164100-23900	HARNESS, CONVERSION	1						W	
	(A=E/#E11446)										
21-1	1	164100-23900	HARNESS, CONVERSION	1						Z	3
	(A=E/#E11906)										
22	1	129672-49050	RETAINER,CSW	1						W	
	(A=E/#E11906)										
23	1	164100-23910	HARNESS,CONV	1						W	4
	(A=E/#E11906)										
24	1	164100-22820	HARNESS,EXT 4M	1						W	
	(A=E/#E11906)										
25	1	164100-22830	HARNESS,EXT 6M	1						W	
	(A=E/#E11906)										
26	1	164100-22840	HARNESS,EXT 10M	1						W	
	(A=E/#E11906)										

N:Old $\xleftarrow[\text{No}]{\text{Yes}}$ New, Q:Old $\xleftarrow[\text{Yes}]{\text{No}}$ New, R:Old $\xleftarrow[\text{Yes}]{\text{Yes}}$ New, S:Old $\xleftarrow[\text{No}]{\text{No}}$ New, W:Add, Z:Discontinued, F:Interchangeable by set, K:Q'ty Change

++ CONTINUE ++

Copyright (C) 2018 YANMAR CO., LTD. All RightsReserved.

Fig.34. WIRE HARNESS & RELAY

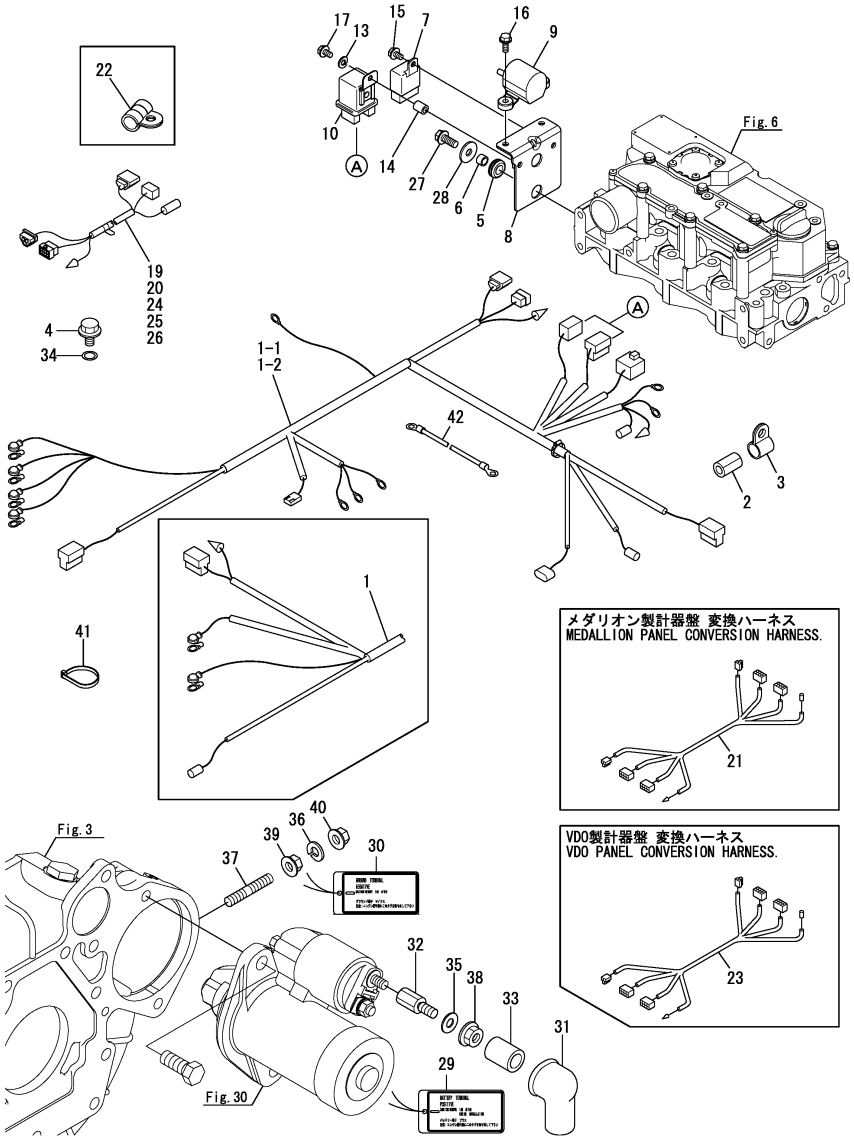

(A)=3YM20 (D)=
(B)= (E)=
(C)= (F)=

No.	Lev.	Parts No.	Description	Q'ty (A)	(B)	(C)	(D)	(E)	(F)	I	R
27	1	26106-080202	BOLT, M8X 20 PLATED	2							
28	1	22157-080000	WASHER, 8	2							
29	1	129677-07450	LABEL, BATTERY+	1						W	
	(A=E/#E14902)										
30	1	129677-07460	LABEL, GROUND-	1						W	
	(A=E/#E14902)										
31	1	129670-77030	COVER, TERMINAL B	1						W	
	(A=E/#E14902)										
32	1	119175-77500	BOLT,STARTER	1						W	
	(A=E/#E14902)										
33	1	128991-77800	COVER, TERMINAL	1						W	
	(A=E/#E14902)										
34	1	22190-080002	WASHER, SEAL 8	1						W	
	(A=E/#E14902)										
35	1	22217-080000	WASHER, 8	1						W	
	(A=E/#E14902)										
36	1	22217-080000	WASHER, 8	1						W	
	(A=E/#E14902)										
37	1	26216-080302	STUD,BOLT 8 X 30	1						W	
	(A=E/#E14902)										
38	1	26366-080002	NUT, 8	1						W	
	(A=E/#E14902)										
39	1	26366-080002	NUT, 8	1						W	
	(A=E/#E14902)										
40	1	26366-080002	NUT, 8	1						W	
	(A=E/#E14902)										
41	1	29621-200001	BAND, 200	3						W	
	(A=*2017.11.)										
42	1	128990-77940	HARNESS,ALT-STARTER	1						W	5
	(A=E/#E14030)										

Remarks
* Refer to Fig.42 for the combination of generator, wire harness, and panel.
(1)It is made by YAZAKI.
(2)It is made by DEUTSCH : VALEO generator specification.
(3)For MEDALLION.
(4)For VDO : VALEO generator specification.
(5)No.1-2 & 42 interchangeable by set.

N:Old $\xleftarrow[\text{No}]{\text{Yes}}$ New, Q:Old $\xleftarrow[\text{Yes}]{\text{No}}$ New, R:Old $\xleftarrow[\text{Yes}]{\text{Yes}}$ New, S:Old $\xleftarrow[\text{No}]{\text{No}}$ New, W:Add, Z:Discontinued, F:Interchangeable by set, K:Q'ty Change

Copyright (C) 2018 YANMAR CO., LTD. All RightsReserved.

Fig.45. (34A)WIRE HARNESS (2-PANEL SPEC.)

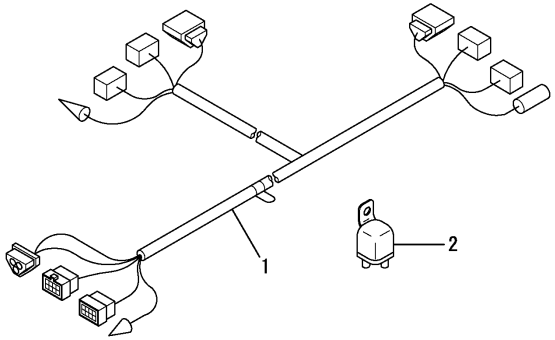

(A)=3YM20 (D)=
(B)= (E)=
(C)= (F)=

No.	Lev.	Parts No.	Description	Q'ty (A)	(B)	(C)	(D)	(E)	(F)	I	R
1	1	164100-23700	HARNESS, DUAL PANEL	1						W	
	(A=E/#E13624)										
2	1	119773-91850	RELAY	1							

N:Old $\xleftrightarrow[\text{No}]{\text{Yes}}$ New, Q:Old $\xleftrightarrow[\text{Yes}]{\text{No}}$ New, R:Old $\xleftrightarrow[\text{Yes}]{\text{Yes}}$ New, S:Old $\xleftrightarrow[\text{No}]{\text{No}}$ New, W:Add, Z:Discontinued, F:Interchangeable by set, K:Q'ty Change

Copyright (C) 2018 YANMAR CO., LTD. All RightsReserved.

Fig.46. (34B)ELECTRIC PARTS

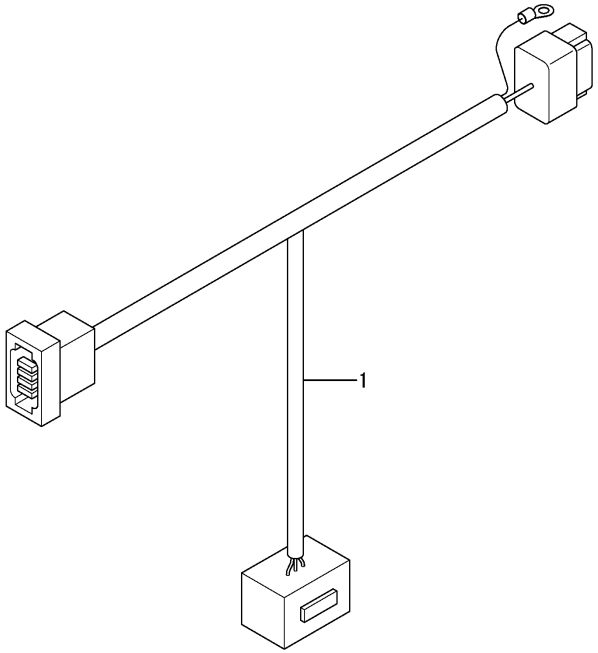

(A)=3YM20 (D)=
(B)= (E)=
(C)= (F)=

No.	Lev.	Parts No.	Description	Q'ty (A)	(B)	(C)	(D)	(E)	(F)	I	R
1	1	196420-02790	AMP	1						W	
	(A=E/#E12516)										

N:Old $\xleftrightarrow[\text{No}]{\text{Yes}}$ New, Q:Old $\xleftrightarrow[\text{Yes}]{\text{No}}$ New, R:Old $\xleftrightarrow[\text{Yes}]{\text{Yes}}$ New, S:Old $\xleftrightarrow[\text{No}]{\text{No}}$ New, W:Add, Z:Discontinued, F:Interchangeable by set, K:Q'ty Change

Copyright (C) 2018 YANMAR CO., LTD. All RightsReserved.

Fig.35. INSTRUMENT PANEL(B-TYPE)(OPTIONAL)

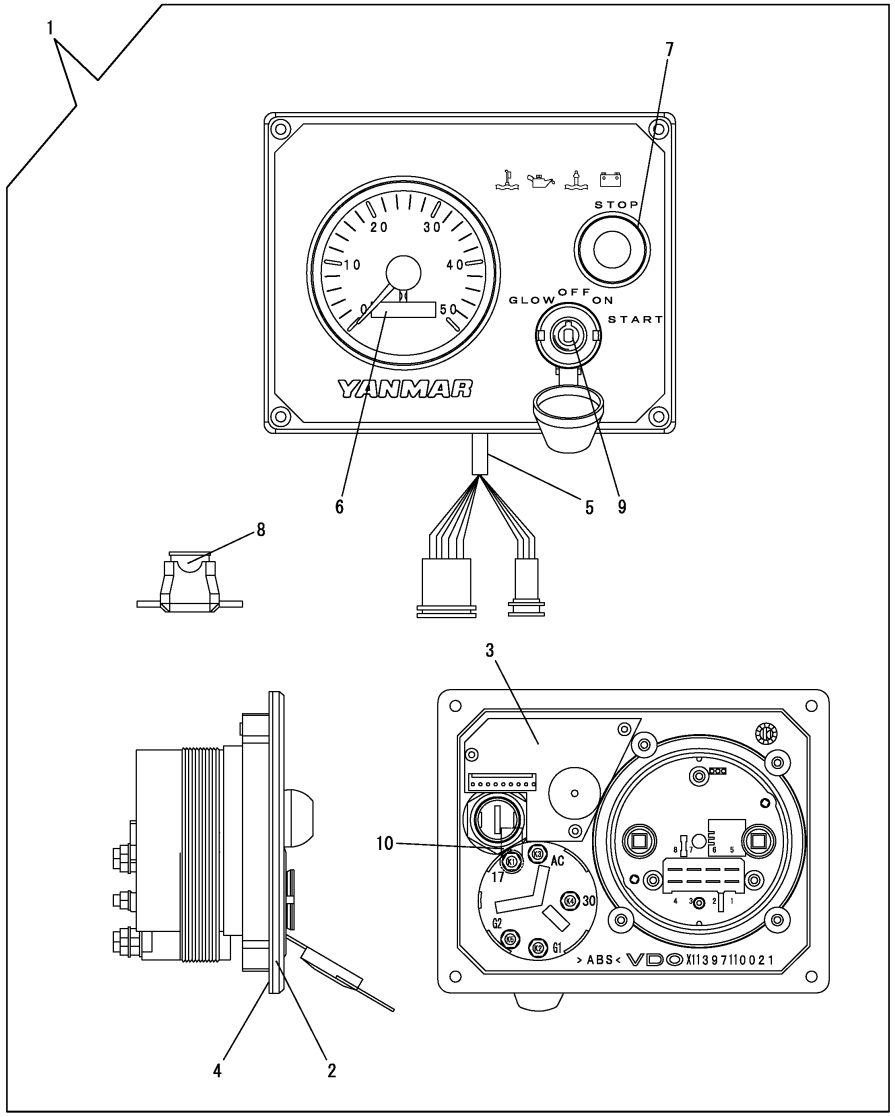

(A)=3YM20 (D)=
(B)= (E)=
(C)= (F)=

No.	Lev.	Parts No.	Description	Q'ty (A)	(B)	(C)	(D)	(E)	(F)	I	R
1	1	129271-91110	PANEL, INSTRUMENT B	1							
1-1	1	129271-91111	PANEL, INSTRUMENT B	1						N	
	(A=*2005.12.)										
1-2	1	129271-91112	PANEL	1						N	
	(A=*2008.09.)										
1-3	1	129271-91113	PANEL, INSTRUMENT B	1						N	
	(A=*2009.09.)										
2	2	129271-91120	PANEL WITH COVERFOIL	1							
3	2	129271-91130	CIRCUIT	1							
3-1	2	129271-91131	CIRCUIT WITH LED&BZR	1						N	
	(A=*2008.09.)										
3-2	2	129271-91132	CIRCUIT WITH LED&BZR	1						N	
	(A=*2009.09.)										
4	2	129271-91140	SEAL	1							
5	2	129271-91150	HARNESS, WIRE	1							
6	2	129271-91210	TACHOMETER	1							
6-1	2	129271-91211	TACHOMETER (AN)10.29	1						N	
	(A=*2009.09.)										
7	2	129271-91220	SWITCH, STOP	1							
8	2	129271-91230	FUSE	1							
9	2	127412-91250	SWITCH, KEY	1							
10	2	129271-91260	CAP, RUBBER M5	1						W	
	(A=*2005.12.)										

Remarks
* This item is applicable to [(A)=Dec., 2011] or previous machines(Refer to Fig.40).
* Refer to Fig.42 for the combination of generator, wire harness, and panel.

N:Old $\xleftarrow[\text{No}]{\text{Yes}}$ New, Q:Old $\xleftarrow[\text{Yes}]{\text{No}}$ New, R:Old $\xleftarrow[\text{Yes}]{\text{Yes}}$ New, S:Old $\xleftarrow[\text{No}]{\text{No}}$ New, W:Add, Z:Discontinued, F:Interchangeable by set, K:Q'ty Change

Copyright (C) 2018 YANMAR CO., LTD. All RightsReserved.

Fig.36. TOOL

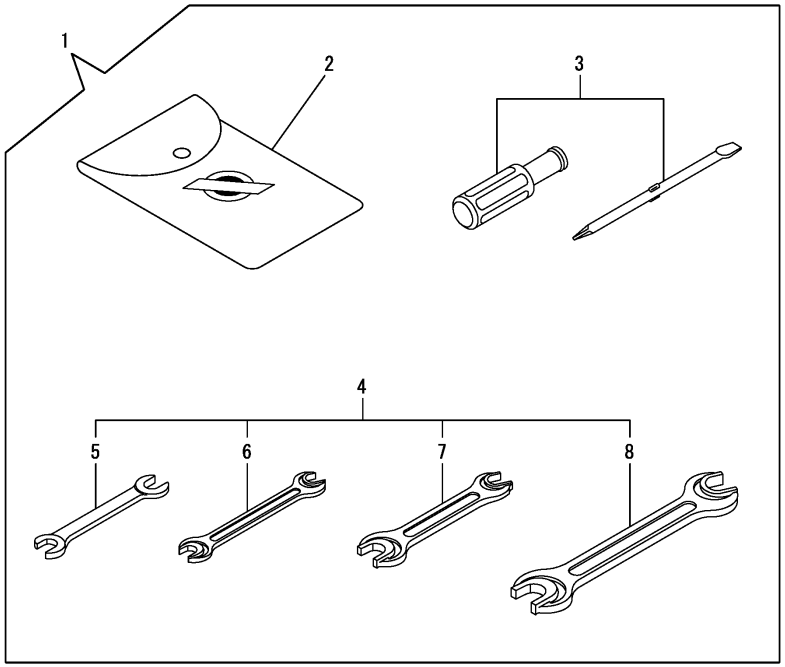

(A)=3YM20 (D)=
(B)= (E)=
(C)= (F)=

No.	Lev.	Parts No.	Description	Q'ty (A)	(B)	(C)	(D)	(E)	(F)	I	R
1	1	129270-92100	BOX, TOOL	1							
2	2	129270-92600	BAG, TOOL	1							
3	2	129270-92650	DRIVER	1							
4	2	129270-92690	WRENCH ASSY	1							
5	3	129270-92610	WRENCH, 10X13	1							
6	3	129270-92620	WRENCH, 12X14	1							
7	3	129270-92630	WRENCH, 17X19	1							
8	3	129270-92640	WRENCH, 22X24	1							

N:Old $\xleftrightarrow[\text{No}]{\text{Yes}}$ New, Q:Old $\xleftrightarrow[\text{Yes}]{\text{No}}$ New, R:Old $\xleftrightarrow[\text{Yes}]{\text{Yes}}$ New, S:Old $\xleftrightarrow[\text{No}]{\text{No}}$ New, W:Add, Z:Discontinued, F:Interchangeable by set, K:Q'ty Change

Copyright (C) 2018 YANMAR CO., LTD. All RightsReserved.

Fig.37. GASKET SET(OPTIONAL)

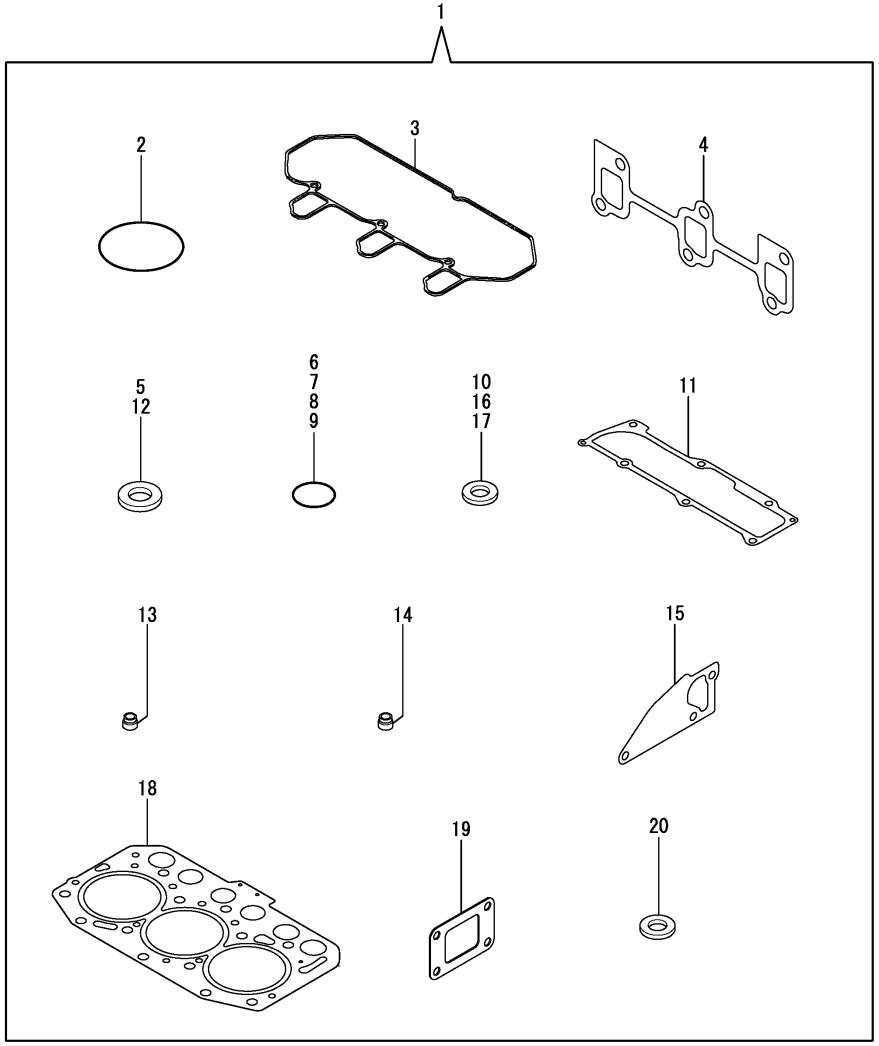

(A)=3YM20 (D)=
(B)= (E)=
(C)= (F)=

No.	Lev.	Parts No.	Description	Q'ty (A)	(B)	(C)	(D)	(E)	(F)	I	R
1	1	728890-92600	GASKET SET	1							
2	2	121850-51960	O-RING	1							
3	2	119515-11310	GASKET, BONNET	1							
4	2	119717-13110	GASKET, EXH.MANIFOLD	1							
5	2	22190-080002	WASHER, SEAL 8	6							
6	2	24311-000320	O-RING, 1AP32.0	2							
7	2	119717-32060	O-RING, P15.0	1							
8	2	119624-32040	O-RING, P12.0	1							
9	2	119717-32050	O-RING, P17.0	3							
10	2	119600-11460	GASKET, NOZZLE	6							
11	2	119515-11330	GASKET	1							
12	2	22190-160002	WASHER, SEAL 16	2							
13	2	119717-11340	SEAL, VALVE STEM	3							
14	2	119717-11350	SEAL, VALVE STEM	3							
15	2	119515-42020	GASKET, WATER PUMP	1							
16	2	23414-080000	GASKET, 8X1.0	1							
17	2	124465-44950	GASKET, 16	2							
18	2	119515-01330	GASKET, HEAD	1							
18-1	2	119515-01331	GASKET, HEAD	1						N	
	(A=*2011.12.)										
19	2	128370-13201	GASKET	1							
20	2	129150-49360	GASKET	1							

N:Old $\xleftrightarrow[\text{No}]{\text{Yes}}$ New, Q:Old $\xleftrightarrow[\text{Yes}]{\text{No}}$ New, R:Old $\xleftrightarrow[\text{Yes}]{\text{Yes}}$ New, S:Old $\xleftrightarrow[\text{No}]{\text{No}}$ New, W:Add, Z:Discontinued, F:Interchangeable by set, K:Q'ty Change

Copyright (C) 2018 YANMAR CO., LTD. All RightsReserved.

Fig.39. INSTRUMENT PANEL(B-TYPE)(OPTIONAL)

(A)=3YM20 (D)=
(B)= (E)=
(C)= (F)=

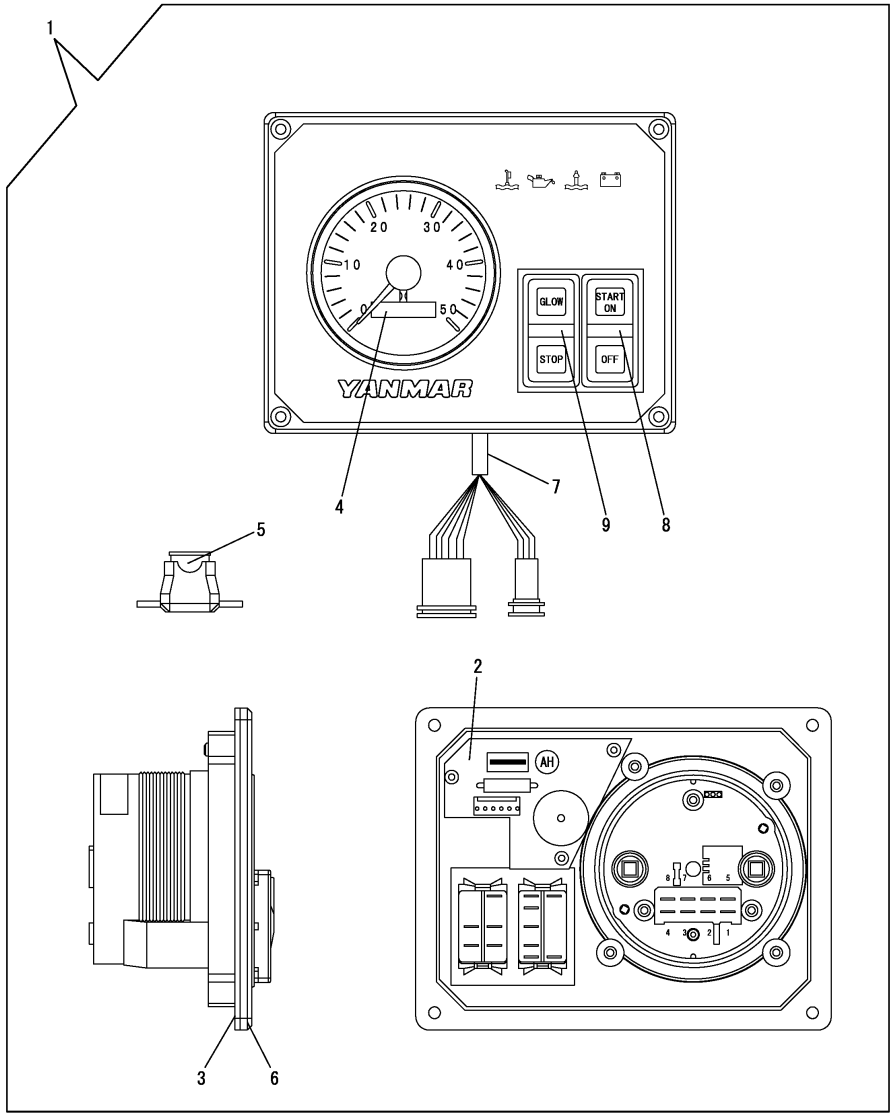

No.	Lev.	Parts No.	Description	Q'ty (A)	(B)	(C)	(D)	(E)	(F)	I	R
1	1	129271-91300	PANEL	1						W	
	(A=*2007.04.)										
1-1	1	129271-91301	PANEL	1						N	
	(A=*2008.09.)										
1-2	1	129271-91302	PANEL,B KEYLESS	1						N	
	(A=*2009.09.)										
2	2	129271-91130	CIRCUIT	1							
2-1	2	129271-91131	CIRCUIT WITH LED&BZR	1						N	
	(A=*2008.09.)										
2-2	2	129271-91132	CIRCUIT WITH LED&BZR	1						N	
	(A=*2009.09.)										
3	2	129271-91140	SEAL	1							
4	2	129271-91210	TACHOMETER	1							
4-1	2	129271-91211	TACHOMETER (AN)10.29	1						N	
	(A=*2009.09.)										
5	2	129271-91230	FUSE	1							
6	2	129271-91310	PANEL WITH COVERFOIL	1							
7	2	129271-91320	HARNESS,B KEYLESS	1							
8	2	129271-91330	SWITCH,OFF/START	1							
9	2	129271-91340	SWITCH,GLOW/STOP	1							

Remarks
* This item is applicable to [(A)=Dec., 2011] or previous machines(Refer to Fig.40).
* Refer to Fig.42 for the combination of generator, wire harness, and panel.

N:Old $\xleftrightarrow[\text{No}]{\text{Yes}}$ New, Q:Old $\xleftrightarrow[\text{Yes}]{\text{No}}$ New, R:Old $\xleftrightarrow[\text{Yes}]{\text{Yes}}$ New, S:Old $\xleftrightarrow[\text{No}]{\text{No}}$ New, W:Add, Z:Discontinued, F:Interchangeable by set, K:Q'ty Change

Copyright (C) 2018 YANMAR CO., LTD. All RightsReserved.

Fig.40. INSTRUMENT PANEL(MEDALLION)(FROM JAN. 2012)

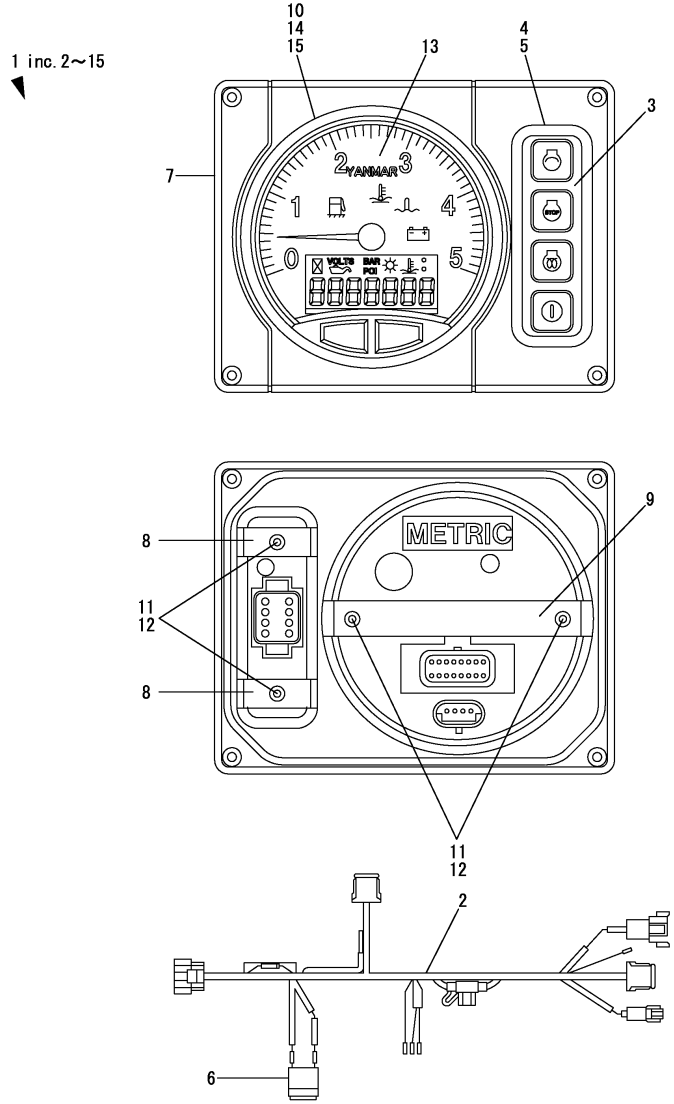

(A)=3YM20 (D)=
(B)= (E)=
(C)= (F)=

No.	Lev.	Parts No.	Description	Q'ty (A)	(B)	(C)	(D)	(E)	(F)	I	R
1	1	164100-30100	PANEL ASSY, B20	1						W	
	(A=E/#E11446)										
1-1	1	164100-30101	PANEL ASSY, B20	1						N	
	(A=*2012.06.)										
1-2	1	164100-30102	PANEL ASSY, B20 MD	1						S	1
	(A=E/#E20848)										
1-3	1	164100-30103	PANEL ASSY, B20 MD	1						N	
	(A=E/#E13022)										
1-4	1	164100-30104	PANEL ASSY, B20 MD	1						N	
	(A=E/#E13926)										
2	2	164100-21100	HARNESS, PANEL	1							
3	2	164100-31100	SWITCH, PANEL	1							
3-1	2	164100-31101	SWITCH, PANEL MD	1						N	
	(A=*2012.06.)										
3-2	2	164100-31102	SWITCH, PANEL MD	1						N	
	(A=E/#E13926)										
4	2	164100-31150	GASKET, SWITCH MD	1							
5	2	164100-31900	BEZEL, SWITCH BK MD	1							
6	2	164100-36100	BUZZER, PANEL	1							
7	2	164100-39100	FRAME, PANEL B	1							
8	2	164100-39120	BRACKET, SWITCH	2							
9	2	164100-39130	BRACKET, GAUGE 5	1							
9-1	2	164100-39131	BRACKET, GAUGE 5 MD	1						S	1
	(A=E/#E20848)										
10	2	164100-39150	CAP, GAUGE TERMINAL	1							
11	2	164100-39180	WASHER, LOCK	4							
12	2	164100-39190	NUT, M3.5	4							
13	2	164100-53100	GAUGE, TACH LCD 5	1							
13-1	2	164100-53101	GAUGE, TACH LCD 5 MD	1						N	
	(A=*2012.06.)										
13-2	2	164100-53102	GAUGE, TACH LCD 5 MD	1						S	1
	(A=E/#E20848)										
13-3	2	164100-53103	GAUGE, TACH LCD 5 MD	1						N	
	(A=E/#E13022)										
14	2	164100-53150	GASKET, GAUGE 5 MD	1							
15	2	164100-53900	BEZEL, GAUGE 5 BK MD	1							

Remarks
* This item is applicable to [(A)=Jan., 2012] or following machines(Refer to Fig.34).
* Refer to Fig.42 for the combination of generator, wire harness, and panel.
(1)Valeo generator specification.

N:Old $\overset{\text{Yes}}{\underset{\text{No}}{\leftrightarrow}}$ New, Q:Old $\overset{\text{No}}{\underset{\text{Yes}}{\leftrightarrow}}$ New, R:Old $\overset{\text{Yes}}{\underset{\text{Yes}}{\leftrightarrow}}$ New, S:Old $\overset{\text{No}}{\underset{\text{No}}{\leftrightarrow}}$ New, W:Add, Z:Discontinued, F:Interchangeable by set, K:Q'ty Change

Copyright (C) 2018 YANMAR CO., LTD. All RightsReserved.

Fig.42. COMBINATION OF GENERATOR, WIRE HARNESS, AND PANEL

.

	ジェネレータ(オルタネータ) GENERATOR(ALTERNATOR)			エンジンハーネス ENGINE WIRE HARNESS		延長ハーネス EXT. WIRE HARNESS				変換ハーネス CONV. WIRE HARNESS	パネル PANEL			
見出番号 Ref. No.	No.1	No.2	No.3	No.10	No.11	No.20	No.21	No.22	No.23	No.30	No.40	No.41	No.42	No.43
部品番号 PARTS NUMBER	128271 -77200	119573 -77201	128990 -77250	128990 -77920	128990 -77921	128391 -77700	128391 -77720	164100 -22820	164100 -22830	164100 -23900	129271 -91113	129271 -91302	164100 -30101	164100 -30102
仕様 SPECIFICATION	12V-60A	12V-80A	12V-120A	—	—	3m	6m	4m	6m	—	B	B キーレス B KEYLESS	B20	B20
メーカー MAKER	HITACHI	HITACHI	VALEO	—	—	—	—	—	—	—	VDO	VDO	MEDALLION	MEDALLION
コネクタメーカー CONNECTOR'S MAKER	(YAZAKI)	(YAZAKI)	(YAZAKI)	ALTERNATOR: YAZAKI / PANEL SIDE: YAZAKI	ALTERNATOR: YAZAKI / PANEL SIDE: AMPHENOL	YAZAKI	YAZAKI	AMPHENOL	AMPHENOL	ENG SIDE: YAZAKI / PANEL SIDE: AMPHENOL	YAZAKI	YAZAKI	AMPHENOL	AMPHENOL
生産年 PRODUCTION YEAR 2004	●	○		●		○	○				○			
2005	●	○		●		○	○				○			
2006	●	○		●		○	○				○			
2007	●	○		●		○	○				○	○		
2008	●	○		●		○	○				○	○		
2009	●	○		●		○	○				○	○		
2010	●	○		●		○	○				○	○		
2011		●		●		○	○				○	○		
2012		●		●		○	○				○	○		
		●		●		○	○			●			○	(○)※1
2013		●		●		○	○			●			○	(○)※1
2013			●		●			○	○					○
2014			●		●			○	○					○

●：標準 STANDARD ，○：オプション OPTION

※1：オルタネータ回転数信号に対するパルス値の設定を変更する必要があります。
※1: It is necessary to change a setup of the pulse value over an alternator number-of-rotations signal.

(A)=3YM20 (D)=
(B)= (E)=
(C)= (F)=

No.	Lev.	Parts No.	Description	Q'ty (A)	(B)	(C)	(D)	(E)	(F)	I	R
1	1	128271-77200	GENERATOR, 12V-60A	1							
2	1	119573-77201	ALTERNATER(12V-80A	1							
3	1	128990-77250	ALTERNATOR,12V-120A	1							
10	1	128990-77920	HARNESS, WIRE	1							
11	1	128990-77921	HARNESS, WIRE ENGINE	1							
20	1	128391-77700	HARNESS, WIRE	1							
21	1	128391-77720	HARNESS, WIRE	1							
22	1	164100-22820	HARNESS,EXT 4M	1							
23	1	164100-22830	HARNESS,EXT 6M	1							
30	1	164100-23900	HARNESS, CONVERSION	1							
40	1	129271-91113	PANEL, INSTRUMENT B	1							
41	1	129271-91302	PANEL,B KEYLESS	1							
42	1	164100-30101	PANEL ASSY, B20	1							
43	1	164100-30102	PANEL ASSY, B20 MD	1							

N:Old ◄Yes/No► New, Q:Old ◄No/Yes► New, R:Old ◄Yes/Yes► New, S:Old ◄No/No► New, W:Add, Z:Discontinued, F:Interchangeable by set, K:Q'ty Change

Copyright (C) 2018 YANMAR CO., LTD. All RightsReserved.

Fig.47. PROPELLER NUT

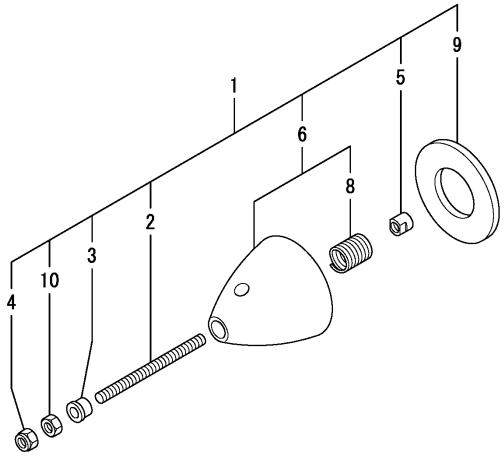

(A)=3YM20 (D)=
(B)= (E)=
(C)= (F)=

No.	Lev.	Parts No.	Description	Q'ty (A)	(B)	(C)	(D)	(E)	(F)	I	R
1	1	796420-09200	PROP NUT ASY,SPARE	1						W	
	(A=E/#E13624)										
2	2	196440-09150	BOLT M8X105	1							
3	2	196440-09160	SPACER	1							
4	2	196440-09170	NYLON NUT	1							
5	2	196440-09180	NUT 8	1							
6	2	196420-09200	NUT ASSY, PROPELLER	1							
8	3	26273-160151	INSERT, 16 X 1.5D	1							
9	2	196420-09220	WASHER, PROPELLER	1							
10	2	26793-080002	NUT, 8	1							

N:Old $\xleftarrow[\text{No}]{\text{Yes}}$ New, Q:Old $\xleftarrow[\text{Yes}]{\text{No}}$ New, R:Old $\xleftarrow[\text{Yes}]{\text{Yes}}$ New, S:Old $\xleftarrow[\text{No}]{\text{No}}$ New, W:Add, Z:Discontinued, F:Interchangeable by set, K:Q'ty Change

Copyright (C) 2018 YANMAR CO., LTD. All RightsReserved.

Parts No. Index

Parts No.	Fig. No.	Ref. No.
101304-59020	23	29
101720-55750	24	8
103854-39140	23	33
104214-13580	8	10
		22
104214-83980	29	13
104264-59020	24	15
104500-55710	24	5
104511-78780	13	25 -1
105010-11490	6	5
105100-55501	34	5
105311-01090	1	7
105430-55041	25	8
105583-85900	29	12
110250-55610	24	4
114250-39450	12	6
118200-53010	23	2
118400-51370	20	56
119025-51520	20	67 -1
119125-51370	20	56 -1
119125-51900	20	90 -1
119129-77250	32	14
119129-77260	32	15
119129-77320	32	3
119129-77890	32	20
119129-77900	32	21
119129-77930	32	19
119172-59201	24	16
119175-77500	34	32
119247-77100	34	7
119285-01990	1	9
119285-11990	6	14
119285-66650	21	139
119305-35170	12	2
119415-51100	20	10
119515-01200	1	30
119515-01330	1	31
	37	18
119515-01331	1	31 -1
	37	18 -1
119515-01720	3	7
119515-11100	6	16
119515-11101	6	16 -1
119515-11110	6	17
119515-11200	6	24
119515-11240	6	25
119515-11280	6	29
119515-11310	6	48
	37	3
119515-11320	6	49

Parts No.	Fig. No.	Ref. No.
119515-11330	6	50
	37	11
119515-11380	6	37
119515-11750	6	6
119515-11800	6	12
119515-14400	9	2
119515-14580	9	3
119515-14581	9	3 -1
119515-21700	10	1
119515-22080	10	16
119515-22300	10	22
119515-22500	10	18
119515-22550	10	34
119515-22900	10	32
119515-23000	10	24
119515-23001	10	24 -1
119515-23600	10	30
119515-23601	10	30 -1
119515-23610	10	38
119515-23611	10	38 -1
119515-42020	14	13
	37	15
119515-42041	14	3
119515-53000	23	1
119515-53001	23	1 -1
119515-53010	23	3
119515-59540	23	13
119515-61440	21	20 -1
119527-61700	21	129
119540-42000	14	1
119546-59810	23	9
119546-59820	23	10
119546-59830	23	11
119573-77201	32	1
	42	2
119600-11460	6	4
	37	10
119620-01750	3	12
119620-01800	2	9
119620-02020	1	10
119620-14200	9	1
119620-21941	10	15
119620-49290	14	29
119620-59700	23	22
119621-21680	10	14
119621-21681	10	14 -1
119623-01250	1	8
119624-32040	2	19
	37	8
119660-01911	2	18

Parts No.	Fig. No.	Ref. No.
119660-61300	21	76
119660-61901	21	65
119717-01501	2	1
119717-01521	2	6
119717-01570	2	3
119717-01590	2	4
119717-01750	2	31
119717-02410	1	13
119717-02411	1	13 -1
119717-02930	1	27
119717-03031	6	38
119717-03070	6	39
		40
119717-11131	6	18
119717-11190	6	20
119717-11260	6	28
119717-11340	6	21
	37	13
119717-11350	6	22
	37	14
119717-11650	6	30
119717-13110	15	1
	37	4
119717-21200	10	6
119717-23200	10	29
119717-23910	10	28
119717-25050	9	10
119717-25100	9	11
119717-25101	9	11 -1
119717-25930	9	16
119717-32050	2	20
	37	9
119717-32060	12	3
	37	7
119717-32080	2	11
119717-32100	2	10
119717-32110	2	15
119717-32120	2	16
119717-35140	12	1 -1
119717-39210	12	7
119717-42031	14	4
119717-42320	14	11
119717-51030	20	6
119717-51060	20	7
119717-51070	20	8
119717-51150	20	14
119717-51180	20	16
119717-51190	20	17
119717-51200	20	18
119717-51201	20	18 -1

Parts No.	Fig. No.	Ref. No.
119717-51300	20	45
119717-51330	20	48
119717-51420	20	88
119717-51480	20	94
119717-51481	20	94 -1
119717-51490	20	95
119717-51491	20	95 -1
119717-51500	20	66
119717-51570	20	16 -1
119717-51710	20	77
119717-51711	20	77 -1
119717-51750	20	78
119717-51760	20	79
119717-51761	20	79 -1
119717-51860	20	92 -1
119717-51930	21	68 -1
119717-61050	21	2
119717-61060	21	3
119717-61070	21	4
119717-61100	21	5
119717-61120	21	8
119717-61130	21	9
119717-61140	21	10
119717-61150	21	10 A
119717-61200	21	72
119717-61201	21	72 -1
119717-61400	21	13
119717-61440	21	20
119717-61500	21	29
119717-77800	6	58
119717-77801	6	58 -1
119740-42350	14	26
119740-61470	21	87 -1
119773-59511	23	20
119773-91850	45	2
119802-03100	6	41
119802-03110	6	42
119802-03121	6	43
119802-03131	6	44
119802-03141	6	45
119802-32130	2	17
119810-02940	1	32
119810-02941	1	32 -1
119813-59950	23	23
119831-42290	31	8
	32	23
119840-59570	23	12
119C10-42000	14	1 -1
119C10-42320	14	11 -1
120270-67120	33	3

Parts No. Index

Parts No.	Fig. No.	Ref. No.
120270-77511	34	9
121111-21501	10	8
121120-01620	3	11
121370-55601	24	3 -1
121370-55730	24	7
121450-42450	3	2
	14	23 -1
121574-86320	26	14
	28	2
121575-49310	16	4
	34	3 -1
		3 -2
121575-66830	21	21 -1
121750-59890	24	21
121750-59910	48	17
121850-51960	2	21
	37	2
122710-51090	20	9
123310-77640	30	26
123325-35140	48	12
123325-35160	48	2
123325-35170	48	3
123672-55760	48	6
123678-55890	48	10
123682-07852	5	5 A
123900-77700	31	2
123900-77730	31	5
124060-01050	1	6
124070-13300	8	7
		19
124070-13520	8	6
124070-42400	13	22
	43	22
124070-77950	34	3
124080-77390	32	10
124080-77520	32	12
124085-02220	3	13
124101-49530	14	17
124160-01751	2	29
	6	55
124160-01910	1	5
124195-77770	30	23
124223-49050	16	6
124465-44950	3	5
	14	21
		22
		32
		38
	37	17
124550-51350	20	49

Parts No.	Fig. No.	Ref. No.
124550-77030	30	25
124770-77940	34	2
124950-21600	10	12
124976-34850	11	7
127412-91250	35	9
128170-13600	8	3
128170-86501	26	12
128171-81510	27	2
128171-81520	27	1
128171-81530	27	3
128270-12540	7	5
128271-77200	31	1
	42	1
128271-77720	31	4
128271-77740	31	6
128271-77750	31	7
128275-39710	12	12
128296-07190	5	6
128296-07400	5	7
128296-07420	5	8
128296-07450	5	9
128296-07460	5	10
128370-13201	8	1
		16
		28
	37	19
128370-13600	8	5
128370-13610	8	11
128377-07150	5	4
128377-07260	5	2
128377-07350	5	5 C
	33	5
128377-08120	4	3
128377-08130	4	4
128377-08340	4	7
128377-08341	4	7 -1
128377-08350	4	8
		9
128377-08351	4	8 -1
		9 -1
128391-77700	34	19
	42	20
128391-77720	34	20
	42	21
128397-13530	8	2
128397-44500	15	22
128397-44510	15	24
128790-77580	41	1
128890-01750	3	1
128890-08100	4	1 -1

Parts No.	Fig. No.	Ref. No.
128890-13530	8	2 -1
128890-13590	8	6 A
128890-13600	8	5 A
128890-35080	12	4
128890-55020	14	36
		36 -1
		45
128890-59040	23	31
128890-59041	23	31 -1
128890-59060	24	17
128890-59061	24	17 -1
128890-77310	31	9
	32	24
	41	2
128890-77400	34	8
128990-01650	3	10
128990-07270	5	2 -1
128990-07900	5	1
128990-07910	6	1
128990-08100	4	1
128990-08110	4	2
128990-08140	4	10
128990-08150	4	11
128990-12210	7	1
128990-12500	7	2
128990-13510	8	17
128990-13520	8	18
128990-13610	8	23
128990-21590	10	9
128990-21650	10	13
128990-21670	10	42
128990-21671	10	42 -1
128990-34850	11	1
128990-34860	11	2
128990-34900	5	5 B
128990-42150	13	21
128990-42151	13	21 -1
128990-42160	13	23
128990-42170	13	24
128990-42180	34	14
128990-42260	14	25
128990-42350	14	47
128990-42351	14	47 -1
128990-42500	13	1
128990-42510	13	1 -1
		1 -2
128990-42520	13	20
	43	20
128990-42550	13	3
	43	3

Parts No.	Fig. No.	Ref. No.
128990-42560	13	8
	43	8
128990-42570	13	17
	43	17
128990-44070	15	10
128990-44071	15	10 -1
128990-44080	15	11
128990-44081	15	11 -1
128990-44090	15	14
128990-44100	15	15
128990-44110	15	16
128990-44120	15	17
128990-44130	15	18
128990-44400	15	19
128990-44401	15	19 -1
128990-44500	14	24 -1
128990-44900	15	2
128990-44901	15	2 -1
128990-49010	16	1
128990-49011	16	1 -1
128990-49020	16	3
128990-49021	16	3 -1
128990-49030	3	20
128990-49040	8	12
128990-49050	17	1
128990-49051	17	1 -1
128990-49060	17	3
128990-49090	8	24
128990-49110	16	2
	17	2
128990-49150	17	4
128990-49161	17	7
		7 -1
128990-49170	17	8
		8 -1
128990-49190	17	11
128990-49320	14	33
		39
128990-49330	14	34
128990-49350	14	40
128990-49351	14	40 -1
128990-49360	14	41
128990-49370	14	42
128990-49380	14	43
128990-49390	14	44
128990-49391	14	44 -1
128990-49400	14	43 -1
128990-49800	14	18
128990-55010	24	1
128990-55011	24	1 -1

Parts No. Index

Parts No.	Fig. No.	Ref. No.
128990-55600	24	3
128990-59130	25	2
128990-59131	25	2 -1
128990-59150	24	11
128990-59200	24	16 -1
128990-59510	23	20 -1
128990-59530	24	12
128990-59700	25	1
128990-59890	17	12
	24	21 -1
128990-59900	24	22
128990-61560	21	96
128990-67150	26	1
128990-77250	41	18
	42	3
	44	1
128990-77320	41	3
128990-77330	31	10
	32	25
128990-77341	41	4
128990-77350	13	25
	43	30 -1
128990-77410	33	7
	41	5
128990-77430	34	6
128990-77440	33	2
128990-77441	33	2 -1
128990-77450	33	8
128990-77460	33	1
128990-77470	33	9
128990-77480	33	4
128990-77490	33	15
128990-77491	33	15 -1
		15 -2
128990-77500	33	14
		14 -1
		14 -2
128990-77510	33	6
128990-77540	33	18
		18 -1
128990-77550	34	9 -1
128990-77600	33	3 -1
128990-77610	34	5 -1
128990-77700	44	2
128990-77730	44	3
128990-77770	44	4
128990-77780	44	5
128990-77820	6	59
128990-77910	34	10
128990-77911	34	10 -1

Parts No.	Fig. No.	Ref. No.
128990-77920	34	1
	42	10
128990-77921	34	1 -1
	42	11
128990-77922	34	1 -2
128990-77940	34	42
128990-81150	3	21
128990-86301	28	1
128990-86310	28	1 -1
128990-86350	28	7
128991-77800	34	33
128995-42150	43	21
128995-42170	43	29
128995-42500	43	1
129001-32320	2	13
129001-32330	2	14
129005-59830	12	8
129008-61301	21	76 -1
129051-49310	14	39 -1
129052-61390	21	12
129065-55760	48	7
129065-55770	48	8
129065-55800	48	9
129100-01580	3	9
	10	2
129100-35140	12	1
129100-51570	20	72
129100-61650	21	59
129150-11230	6	31
129150-11750	6	33
129150-25301	9	15
129150-49360	37	20
129150-59120	23	4
129150-59131	23	7
129155-51020	20	5
129155-51140	20	13
129155-51280	20	43
		44
	21	6
129155-51400	20	58
129155-51450	20	61
129155-51521	20	67
129155-51530	20	68
129155-51540	20	69
129155-51550	20	70
129155-51580	20	74
129155-51591	20	75
129155-51600	20	23
129155-51701	20	76
129155-52051	22	2

Parts No.	Fig. No.	Ref. No.
129155-61341	21	77
129155-61450	21	21
129155-61460	21	78
129155-61461	21	78 -1
129155-61480	21	23
129156-51910	20	81
129156-61460	21	22
129158-52000	22	1
129158-52100	22	3
129158-52101	22	3 -1
129209-61370	21	11
129209-61920	21	86 -1
129209-61930	21	130
129209-61940	21	134
129209-61960	21	136
129209-61961	21	136 -1
129209-61970	21	131
129270-44500	15	23
129270-44501	15	23 -1
129270-92100	36	1
129270-92600	36	2
129270-92610	36	5
129270-92620	36	6
129270-92630	36	7
129270-92640	36	8
129270-92650	36	3
129270-92690	36	4
129271-77641	41	6
129271-77950	21	132
129271-91110	35	1
129271-91111	35	1 -1
129271-91112	35	1 -2
129271-91113	35	1 -3
	42	40
129271-91120	35	2
129271-91130	35	3
	39	2
129271-91131	35	3 -1
	39	2 -1
129271-91132	35	3 -2
	39	2 -2
129271-91140	35	4
	39	3
129271-91150	35	5
129271-91210	35	6
	39	4
129271-91211	35	6 -1
	39	4 -1
129271-91220	35	7
129271-91230	35	8

Parts No.	Fig. No.	Ref. No.
129271-91230	39	5
129271-91260	35	10
129271-91300	39	1
129271-91301	39	1 -1
129271-91302	39	1 -2
	42	41
129271-91310	39	6
129271-91320	39	7
129271-91330	39	8
129271-91340	39	9
129470-67200	26	2
129486-61540	21	49
129495-55610	48	4
129495-55620	48	5
129508-11180	6	19
129608-77010	30	1
129608-77110	30	4
129612-42290	31	8 -1
		8 -2
	32	23 -1
129612-77710	31	3
129670-13600	8	3 -1
129670-44570	15	25
129670-49500	17	6 -1
129670-55750	48	1
129670-55810	48	16
129670-77030	30	25 -1
		25 -2
	34	31
129670-77940	34	2 -1
		2 -2
129672-49050	34	22
129673-44110	15	7
129673-44131	15	18 -1
129673-44150	15	9
129677-07450	34	29
129677-07460	34	30
129677-49950	7	8
	8	29
		30
	16	11
		13
	17	10
129698-77020	30	2
129698-77101	30	3
129698-77120	30	5
129698-77130	30	7
129698-77140	30	6
129698-77150	30	8
129698-77161	30	9

Parts No. Index

Parts No.	Fig. No.	Ref. No.
129698-77170	30	10
129698-77180	30	17
129698-77190	30	18
129698-77200	30	19
129698-77210	30	20
129698-77220	30	21
129698-77230	30	22
129698-77240	30	15
129698-77250	30	16
129698-77260	30	11
129698-77270	30	13
129698-77280	30	14
129900-32130	2	12
129901-11450	6	3
129901-53800	23	3 A
129901-59560	23	19
129916-49740	14	12
138603-59380	25	4
158552-61700	21	60
158552-61710	21	64
158552-61900	21	81 -1
158600-51170	20	15
158600-51270	20	42
158600-51410	20	59
158600-51420	20	60
158600-51440	20	50
158600-51441	20	50 -1
158600-51442	20	50 -2
158600-51570	20	73
158600-51790	20	80
158601-61760	21	88
158601-61790	21	88 -1
164100-21100	40	2
164100-22820	34	24
	42	22
164100-22830	34	25
	42	23
164100-22840	34	26
164100-23700	45	1
164100-23900	34	21
		21 -1
	42	30
164100-23910	34	23
164100-30100	40	1
164100-30101	40	1 -1
	42	42
164100-30102	40	1 -2
	42	43
164100-30103	40	1 -3
164100-30104	40	1 -4

Parts No.	Fig. No.	Ref. No.
164100-31100	40	3
164100-31101	40	3 -1
164100-31102	40	3 -2
164100-31150	40	4
164100-31900	40	5
164100-36100	40	6
164100-39100	40	7
164100-39120	40	8
164100-39130	40	9
164100-39131	40	9 -1
164100-39150	40	10
164100-39180	40	11
164100-39190	40	12
164100-53100	40	13
164100-53101	40	13 -1
164100-53102	40	13 -2
164100-53103	40	13 -3
164100-53150	40	14
164100-53900	40	15
174307-51700	21	30
177070-03501	10	40
177088-02430	5	3
194250-51660	17	5
196420-02310	4	12
196420-02790	46	1
196420-09200	47	6
196420-09220	47	9
196440-09150	47	2
196440-09160	47	3
196440-09170	47	4
196440-09180	47	5
196630-12980	5	5
22117-080000	26	15
22137-060000	17	13
22137-080000	41	7
22157-080000	34	28
22190-080002	12	9
		11
	24	13
	34	34
	37	5
22190-100002	21	66
22190-120002	21	79
	23	32
	24	18
22190-140002	48	18
22190-160002	3	5 -1
	11	4
	20	82
	37	12

Parts No.	Fig. No.	Ref. No.
22212-050000	28	3
22217-050000	26	16
	28	3 -1
	41	14
22217-060000	14	27
		27 -1
	20	83
	34	13
22217-080000	34	35
		36
	41	15
22217-120000	4	13
	20	84
22242-000100	26	6
22242-000120	6	34
22252-000220	10	23
22272-000030	21	67
22351-050010	20	85
22351-060012	6	23
22360-080000	26	7
22372-040000	21	80
22414-250150	26	7 -1
22512-040120	10	5
22724-800380	16	8
	30	27
22857-500100	6	51
		52
22857-500160	6	53
23000-013000	23	30 -1
	48	19
23000-016000	23	21
		30
	24	20
23000-025000	8	13
		25
	16	7
23000-028000	8	25 -1
	16	5
		12
23000-041000	17	6
23000-060000	7	6 -1
23001-060000	7	6
23010-013000	15	26
23010-014000	25	5
23061-070300	15	20
23080-018000	12	13
23414-080000	14	14
	37	16
23414-120016	21	133
23418-060000	24	9

Parts No.	Fig. No.	Ref. No.
23854-100000	14	35
23857-030000	12	10
23857-060000	24	19
23857-080000	48	20
23857-100000	11	5
23876-005000	6	15
23876-030000	2	8
23887-100002	21	68
23887-160002	14	23
23887-180002	3	19
24101-060034	20	86
24101-063034	20	87
24311-000120	48	13
24311-000150	21	137
24311-000160	21	137 -1
24311-000320	2	30
	6	54
	37	6
24316-000150	20	57
24341-000070	21	69
24341-000280	21	81
24341-000440	24	10
25111-002000	43	30
26013-060162	24	14
26013-080142	10	41
26013-100302	4	5
26022-050122	20	89
26022-060162	20	90
26106-050102	20	91
26106-060102	12	5
	21	70
		82
	34	15
26106-060122	2	22
	9	9
	14	48
	26	8
	28	4 -2
26106-060142	21	83
	28	4 -1
26106-060162	2	23
	33	10
	34	16
26106-060202	6	56
	21	84
26106-060252	3	14
	14	28 -1
		28 -2
	34	17
26106-060282	3	15

Parts No. Index

Parts No.	Fig. No.	Ref. No.
26106-060282	14	28
26106-060302	13	27
26106-060352	9	14
26106-060402	2	24
		25
26106-060452	3	16
	21	85
	28	4
26106-060602	2	26
	3	17
		18
26106-060652	2	27
26106-060752	6	57
26106-080122	7	7
	14	15
	34	4 -1
26106-080142	6	2
	34	4
26106-080162	10	43
	24	2
	33	11
	43	28
		31
26106-080202	13	28
	31	11
	32	26
	34	27
26106-080252	14	19
		37
		37 -1
		46
	31	12
	32	27
	41	8
26106-080302	48	21
26106-080352	33	16
26106-080354	33	16 -1
		16 -2
26106-080402	6	36
	27	4 -1
26106-080422	27	4
26106-080452	3	22
26106-080502	14	16
26106-080652	14	20
26106-081152	15	21
26106-100252	4	6
		6 -1
	31	13
	32	28
26106-100302	31	14

Parts No.	Fig. No.	Ref. No.
26106-100302	32	29
	41	9
	48	22
26106-100322	29	1
		9
		14
26106-100402	41	10
26116-060652	17	9
26116-080604	41	11
26116-120302	30	24
26203-080302	8	26
26203-080402	8	14
26203-080452	8	14 -1
26203-080602	8	15
26203-080652	8	15 -1
26203-080802	8	27
26206-100252	3	6
26206-100302	3	11 -1
26216-080302	34	37
26216-080452	3	23
	27	5
26273-160151	47	8
26306-080002	2	28
26366-060002	33	12
26366-080002	3	24
	13	26
		29
	21	71
	27	6
	33	13
	34	38
		39
		40
	41	12
	43	32
	48	23
26366-100002	11	6
	48	24
26450-080282	29	15
26557-050122	26	9
	28	5
26557-050202	26	9 -1
	28	5 -1
26577-060122	14	9
26703-080002	8	4
26706-100002	29	2
		10
		16
26716-050002	41	16
26716-060002	20	92

Parts No.	Fig. No.	Ref. No.
26716-080002	41	13
		17
26716-120002	4	14
	20	93
26736-120002	21	86
26756-060002	21	87
26756-080002	29	3
	30	28
	41	17 -1
26793-080002	47	10
26979-050162	6	35
26986-080002	33	17
27233-250000	8	9
		21
27241-120000	1	14
27241-250000	14	10
27730-301400	26	13 -1
28210-000080	12	14
29621-200001	34	41
29622-250001	17	5 -1
		5 -2
41650-502320	48	11
41710-000380	26	13
41710-000410	26	10
	28	6
41730-000681	26	11
43662-015020	16	9
43662-015021	16	9 -1
43666-020951	16	10
45414-500260	29	11
46150-503100	14	24
48110-025063	29	6
48110-028063	29	7
48110-032411	29	4
48110-032502	29	8
48110-522361	29	5
719515-01560	1	1
719717-01500	2	5
719717-02900	1	24
719717-02901	1	24 -1
719717-02910	1	35
719717-02911	1	35 -1
728890-51350	20	1
728890-92600	37	1
796420-08630	4	11 A
796420-09200	47	1
83213-003012	25	7
977780-01211	18	1
	19	1
	38	1

Parts No.	Fig. No.	Ref. No.
977780-01230	18	2
	19	2
977780-01240	19	3
977780-01250	18	3
977780-03000	18	9
	19	9
	38	9
X00141916	13	22 C
	43	25
X00183200	13	22 E
	43	27
X00190050	13	22 D
	43	26
X00353309	13	22 B
	43	24
X00370012	13	15
	43	15
X00371732	13	16
	43	16
X0044021509	18	7
	19	7
	38	7
X0145050	13	10
	43	10
X0146541	13	9
	43	9
X0146542	13	11
	43	11
X014678901	13	22 A
	43	23
X02173432	13	5
		12
	43	5
		12
X02173476	13	6
		19
	43	6
		19
X02233010	13	7
	43	7
X0318101004	38	2
X03431748	13	14
	43	14
X03431760	13	13
	43	13
X158606410X	38	3
X179100011X	19	5
X179100021X	18	5
X179100022X	38	5
X179100100X	18	6

Parts No. Index

Parts No.	Fig. No.	Ref. No.
X179100100X	19	6
	38	6
X199903800X	18	8
	19	8
X199906101X	38	8
X2114535200	30	12
X6303BM0000	32	18
X8636008003	18	4
	19	4
X8636015001	38	4
XL150M14041	32	17
XL155G1330	32	8
XL180120000	32	4
XL1808320	32	13
XL180G13012	32	6
XL180G43150	32	7
XL180G61000	32	2
XL180G63006	32	5
XL180G85001	32	22
XL225431800	32	11
XL225G1325	32	9
XL235340110	32	16

Parts No.	Fig. No.	Ref. No.

Parts No.	Fig. No.	Ref. No.

Parts No.	Fig. No.	Ref. No.