YANMAR

PARTS CATALOG

0CF10-M21302EN

Last update Nov., 2016

Introduction

1.This parts catalog for 3JH25A, 3JH30A is published as a revised edition of the Diesel engine.

	Date of issue	Remarks
First edition	July, 1986	No need
1st revised edition	June, 2007	
2nd revised edition	June.,2014	

2.This parts catalog does not contain the technical data needed for maintenance service.

3.The illustrations used in this parts catalog have been simplified for clarity.

4.The contents of this parts catalog are subject to change without notice.

5.Be sure to use only Yanmar genuine parts for repairs.If imitation parts are used, it may cause engine defects.

KM3P1/KM3P3 断面図
SECTIONAL VIEW

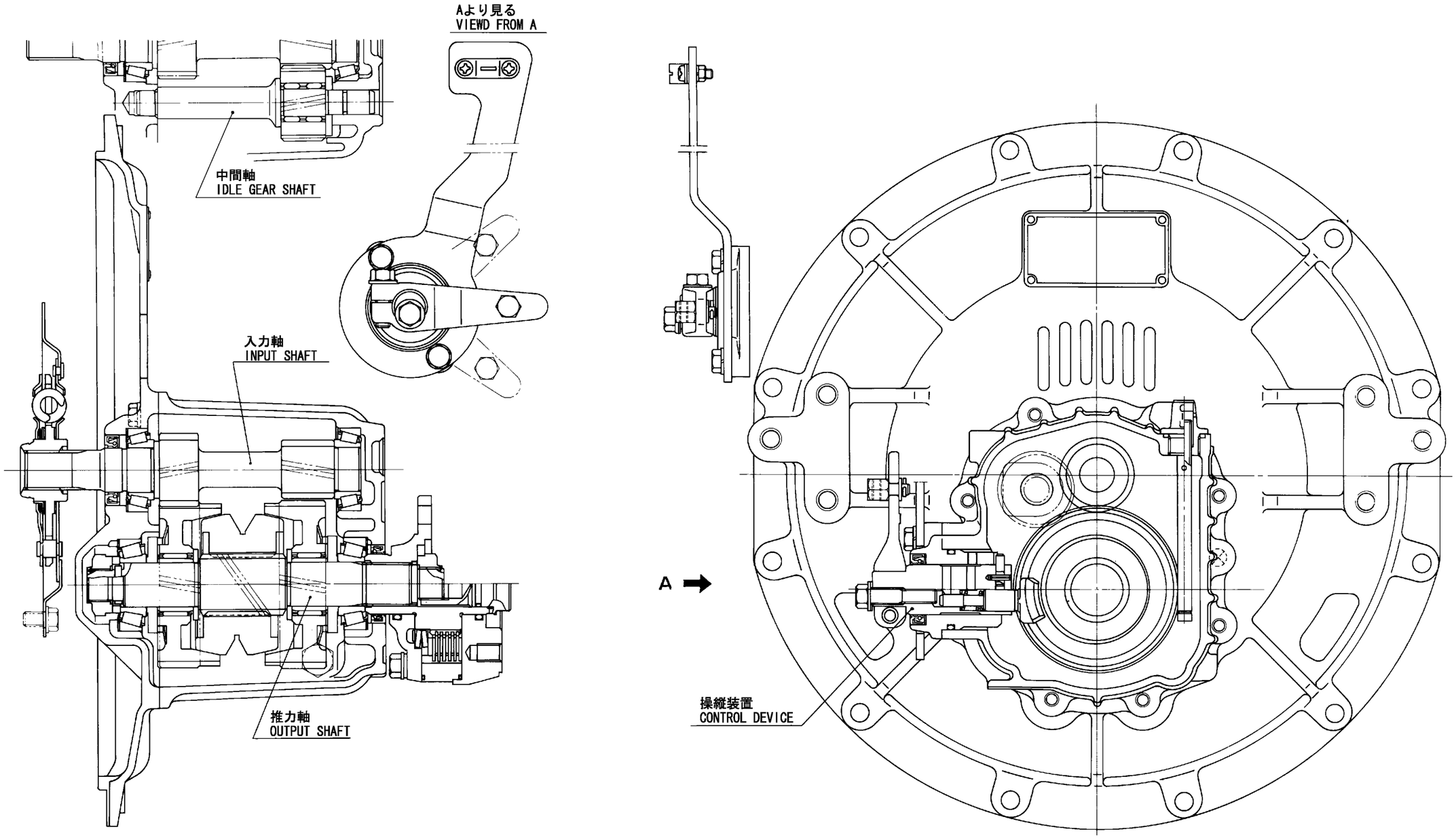

Contents

Fig. No.	Fig. Name
3JH25A/3JH30A	
1.	CYLINDER BLOCK
2.	GEAR HOUSING
91.	(2A)GEAR HOUSING(WITH HAND STARTING SPEC)(OPTIONAL)
3.	FLYWHEEL HOUSING
57.	(3A)FLYWHEEL HOUSING SPACER(WITH HAND STARTING SPEC)(OPTIONAL)
4.	LUB. OIL SUMP
5.	MAIN METAL
6.	CAMSHAFT METAL
7.	BREATHER
58.	(7A)DECOMPRESSION(WITH HAND STARTING SPEC)(OPTIONAL)
8.	ENGINE LIFTER
9.	LABELS
10.	ENGINE BRACKET
60.	(10A)MOUNTING FOOT(WITH HAND STARTING SPEC)(OPTIONAL)
61.	(10B)ENGINE BED & FOUNDATION BOLT(OPTIONAL)
11.	CYLINDER HEAD
12.	BONNET
62.	(12A)BONNET(WITH HAND STARTING SPEC)(OPTIONAL)
92.	(12B)BONNET & DECOMPRESSION(WITH HAND STARTING SPEC)(OPTIONAL)
13.	SUCTION MANIFOLD
14.	MIXING ELBOW
15.	CAMSHAFT
16.	CRANKSHAFT
17.	FLYWHEEL

Fig. No.	Fig. Name
63.	(17A)FLYWHEEL(WITH HAND STARTING SPEC)(OPTIONAL)
18.	PISTON
19.	CONNECTING ROD
20.	IDLE GEAR
21.	FUEL FEED PUMP GEAR
64.	(21A)FUEL FEED PUMP GEAR(WITH HAND STARTING SPEC)(OPTIONAL)
22.	LUB. OIL PUMP
23.	LUB. OIL DIPSTICK
24.	CHECK VALVE
25.	LUB. OIL SUCTION PIPE
26.	LUB. OIL STRAINER
27.	OIL SUPPLY/WASTE PUMP
28.	LUB. OIL PIPE
29.	COOLING SEA WATER PUMP
30.	COOLING FRESH WATER PUMP
31.	FRESH WATER COOLER
32.	SUB-TANK
33.	KINGSTON COCK
34.	COOLING SEA WATER PIPE
35.	COOLING FRESH WATER PIPE
36.	THERMOSTAT
37.	FUEL INJECTION PUMP
38.	FUEL FEED PUMP
39.	FUEL INJECTION VALVE
40.	FUEL STRAINER

Contents

0CF10-M21302

Fig. No.	Fig. Name
41.	FUEL INJECTION PIPE
42.	FUEL PIPE
43.	FUEL RETURN PIPE
44.	GOVERNOR(TO DEC., 1991)
93.	(44A)GOVERNOR(FROM JAN., 1992)
45.	ENGINE STOP DEVICE
46.	SPEED REMOTE CONTROL DEVICE
47.	STARTING MOTOR
55.	(47A)STARTING MOTOR INNER PARTS
89.	(47B)STARTING MOTOR INNER PARTS
48.	GENERATOR(HITACHI : TO JUNE, 2012)(12V-35A)
94.	(48A)GENERATOR(HITACHI : TO JUNE, 1992)(12V-60A)
56.	(48C)GENERATOR INNER PARTS(HITACHI 12V-35A : TO JUNE, 2012)
90.	(48B)GENERATOR(DENSO:FROM JULY, 2012)(12V-55A)
49.	WIRE HARNESS & SENSOR
50.	BATTERY SWITCH(OPTIONAL)
51.	CLUTCH
52.	COUPLING
53.	INSTRUMENT PANEL (B-TYPE)
83.	(53A)INSTRUMENT PANEL(B-TYPE)
84.	(53B)INSTRUMENT PANEL(B-TYPE)
85.	(53C)INSTRUMENT PANEL(C-TYPE)(NEW)
54.	TOOLS
59.	LABELS(BUNDLED)
101.	(59A)LABELS(BUNDLED : WITH HAND STARTING SPEC)(OPTIONAL)

Fig. No.	Fig. Name
65.	BILGE PUMP(OPTIONAL)
95.	(65A)BILGE PUMP(STD)(OPTIONAL)
96.	(65B)BILGE PUMP(DX)(OPTIONAL)
97.	(65C)BILGE PUMP(OPTIONAL)
66.	OIL/WATER SEPARATOR(OPTIONAL)
67.	FUEL PIPE(BUNDLED)
68.	ENGINE STOP CABLE(OPTIONAL)
69.	HAND STARTING DEVICE(OPTIONAL)
70.	START HANDLE(WITH HAND STARTING SPEC)(OPTIONAL)
71.	SINGLE LEVER CONTROL(OPTIONAL)
72.	MORSE CABLE(OPTIONAL)
73.	FRONT DRIVING DEVICE(OPTIONAL)
74.	SPECIAL TOOLS(OPTIONAL)
75.	REPAIR PARTS
98.	(75A)REPAIR PARTS(FRESH-SEA WATER SPEC)
99.	(75B)REPAIR PARTS(KEEL COOLER SPEC)
76.	GASKET SET(OPTIONAL)
86.	(76A)SAFETY LABELS
100.	(76B)SAFETY LABELS(BUNDLED)
87.	(76C)FREE FALL SPEC.
88.	(76D)KEEL COOLER SPEC.

KM3P1/KM3P3

77.	CLUTCH HOUSING
78.	INPUT SHAFT & IDLE GEAR SHAFT

Contents

Fig. No.	Fig. Name
79.	OUTPUT SHAFT
80.	TORQUE LIMITER
81.	REMOTE CONTROL DEVICE
82.	REMOTE CONTROL PASSIVE UNIT

Fig. No.	Fig. Name

Fig.1. CYLINDER BLOCK

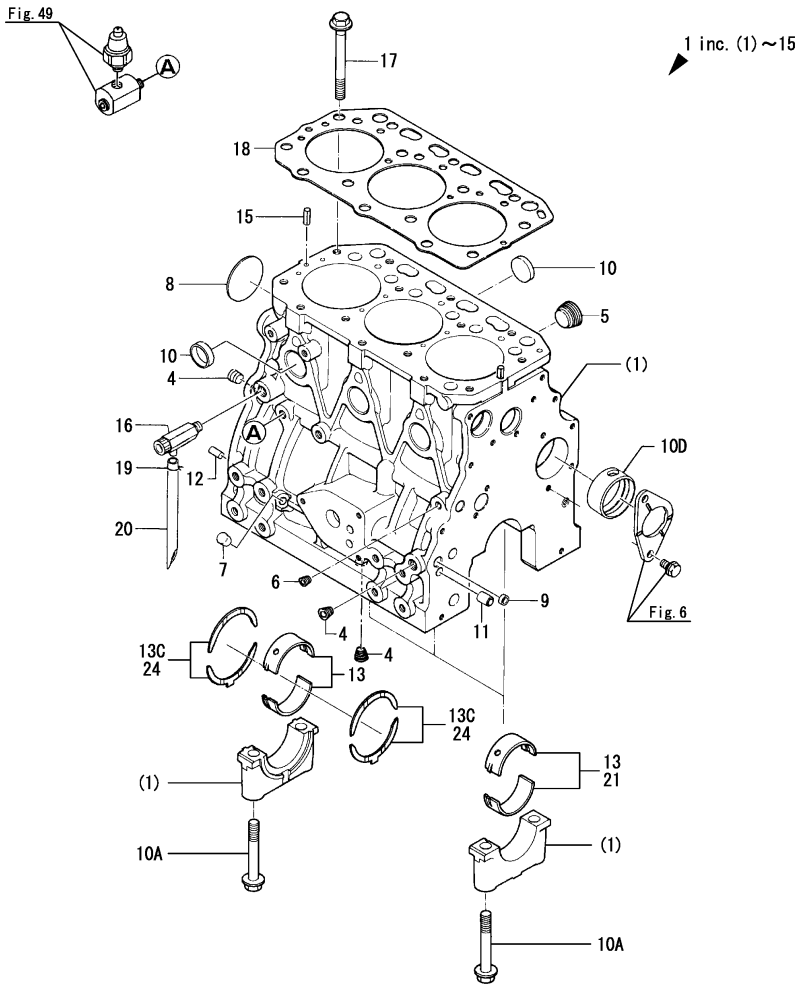

(A)=3JH25A (D)=
(B)=3JH30A (E)=
(C)= (F)=

No.	Lev.	Parts No.	Description	Q'ty (A)	(B)	(C)	(D)	(E)	(F)	I	R
1	1	729170-01560	BLOCK ASSY, CYLINDER	1	1						
4	3	124160-01910	PLUG, PT1/4	3	3						
5	3	171051-01921	PLUG, NPTF1	1	1						
6	3	23876-010000	PLUG, R01	1	1						
7	3	27225-100140	PLUG, 10X14	1	1						
7-1	3	119309-01810	PLUG	1	1					R	
	(A=*2002.08)	(B=*2002.08)									
8	3	27231-500000	PLUG 50	1	1						
8-1	2	129001-01250	PLUG, DISH TYPE 50	1	1					N	
	(A=*1999.11)	(B=*1999.11)									
9	3	27241-120000	PLUG, 12	2	2						
10	3	27241-300000	PLUG 30	6	6						
10A	3	129150-02020	BOLT, METAL CAP	8	8						
10D	3	129795-02411	BUSH, CAMSHAFT	1	1						
10D-1	3	129795-02412	BUSH, CAMSHAFT	1	1					N	
	(A=E02597)	(B=E02890)									
11	2	129795-01950	PIPE, DOWEL L=18	2	2						
12	2	22312-080160	PIN, PARALLEL M8X16	2	2						
13	2	129150-02800	BEARING ASSY, MAIN	4	4						
13-1	2	129690-02800	BEARING, MAIN	4	4					R	
	(A=*2000.08)	(B=*2000.08)									
13C	2	129150-02930	BEARING ASSY, THRUST	2	2						
13C-1	2	129150-02931	BEARING ASSY, THRUST	2	2					N	
	(A=E02597)	(B=E02890)									
15	2	22351-060012	PIN, SPRING 6.0X12	2	2						
16	1	128371-01800	COCK ASSY, 1/4	1	1						
17	1	129150-01200	BOLT, CYLINDER HEAD	14	14						
18	1	129156-01332	GASKET, HEAD	1	1						
18-1	1	129171-01330	GASKET, HEAD T=1.4	1	1					N	
	(A=*1992.03)	(B=*1992.03)									
19	1	124460-77680	RETAINER	1	1						
20	1	23061-070300	PIPE, 7X 300	1	1						
21	1	129690-02870	BEARING, 0.25 US	4	4						1
24	1	129150-02940	BEARING, THRUST 0.25	2	2						2
24-1	1	129150-02941	BEARING, THRUST 0.25	2	2					N	2
	(A=E02597)	(B=E02890)									

Remarks
(1)Under sized (U.S.=0.25) parts.
(2)Over sized (O.S.=0.25) parts.

N:Old $\xleftrightarrow[\text{No}]{\text{Yes}}$ New, Q:Old $\xleftrightarrow[\text{Yes}]{\text{No}}$ New, R:Old $\xleftrightarrow[\text{Yes}]{\text{Yes}}$ New, S:Old $\xleftrightarrow[\text{No}]{\text{No}}$ New, W:Add, Z:Discontinued, F:Interchangeable by set, K:Q'ty Change

Copyright (C) 2014 YANMAR CO., LTD. All RightsReserved.

Fig.2. GEAR HOUSING

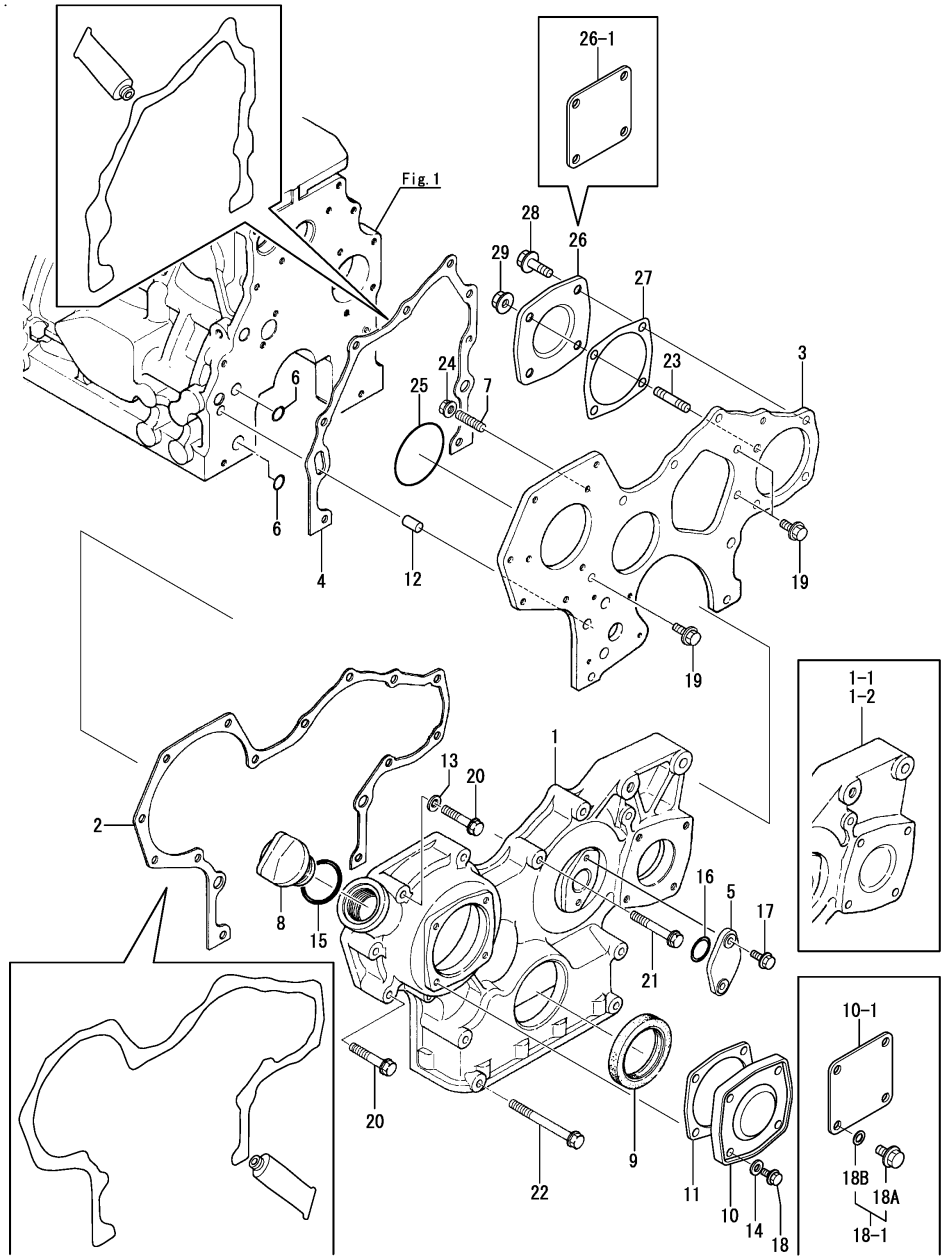

Remarks
(1)It is compatible by changing the gasket of No.2 into a liquefied gasket.

(A)=3JH25A (D)=
(B)=3JH30A (E)=
(C)= (F)=

No.	Lev.	Parts No.	Description	Q'ty (A)	(B)	(C)	(D)	(E)	(F)	I	R
1	1	129470-01500	CASE, GEAR	1	1						
1-1	1	129470-01501	CASE, GEAR	1	1					R	
	(A=*1987.10)	(B=*1987.10)									
1-2	1	129198-01510	CASE,GEAR	1	1					S	1
	(A=E00106)	(B=E00111)									
2	1	129150-01510	GASKET, GEAR CASE	1	1					Z	
	(A=E00106)	(B=E00111)									
3	1	129150-01520	FLANGE, GEAR CASE	1	1						
3-1	1	129100-01520	FLANGE, GEAR CASE	1	1					N	
	(A=*1992.10)	(B=*1992.10)									
4	1	129150-01530	GASKET, GEAR CASE	1	1					Z	
	(A=E00106)	(B=E00111)									
5	1	121023-01550	COVER	1	1						
5-1	1	121023-01551	COVER	1	1					R	
	(A=E02184)	(B=E02186)									
6	1	24311-000160	O-RING, 1AP16.0	2	2						
7	1	121450-01560	BOLT, STUD M8X22	3	3						
7-1	1	119802-01561	BOLT, STUD M8X25	3	3					R	
	(A=E02388)	(B=E02364)									
8	1	124160-01751	CAP, FILLER	1	1						
9	1	129795-01800	SEAL, OIL	1	1						
10	1	129150-01870	COVER	1	1						
10-1	1	124240-01871	COVER, PUMP	1	1					R	
	(A=E02388)	(B=E02364)									
11	1	129150-01880	GASKET	1	1						
11-1	1	129150-01881	GASKET	1	1					R	
	(A=*1990.08)	(B=*1990.08)									
11-2	1	129C26-01890	GASKET, HO-P	1	1					R	
	(A=E08549)	(B=E08525)									
12	1	129795-01950	PIPE, DOWEL L=18	2	2						
13	1	22117-080000	WASHER, 8	1	1					Z	
	(A=*1987.10)	(B=*1987.10)									
14	1	23414-080000	GASKET, 8X1.0	4	4					Z	
	(A=E02388)	(B=E02364)									
15	1	24311-000320	O-RING, 1AP32.0	1	1						
16	1	24341-000260	O-RING, 1AS26.0	1	1						
16-1	1	24341-000240	O-RING, 1AS24.0	1	1					R	
	(A=*1989.02)	(B=*1989.02)									
17	1	26106-060162	BOLT, M6X 16 PLATED	2	2						
18	1	26106-080122	BOLT, M8X 12 PLATED	4	4						
18-1	1	124550-01590	BOLT, M8X16	4	4					R	
	(A=E02388)	(B=E02364)									
18A	2	26106-080162	BOLT, M8X 16 PLATED	4	4					W	
	(A=E02388)	(B=E02364)									
18B	2	22190-080002	WASHER, SEAL 8	4	4					W	
	(A=E02388)	(B=E02364)									
19	1	26106-080162	BOLT, M8X 16 PLATED	3	3						
20	1	26106-080452	BOLT, M8X 45 PLATED	6	6						
21	1	26106-080552	BOLT, M8X 55 PLATED	3	3						
22	1	26106-080852	BOLT, M8X 85 PLATED	4	4						
23	1	26216-080182	STUD, M8X 18	1	1						

N:Old $\overset{\text{Yes}}{\underset{\text{No}}{\leftrightarrow}}$ New, Q:Old $\overset{\text{No}}{\underset{\text{Yes}}{\leftrightarrow}}$ New, R:Old $\overset{\text{Yes}}{\underset{\text{Yes}}{\leftrightarrow}}$ New, S:Old $\overset{\text{No}}{\underset{\text{No}}{\leftrightarrow}}$ New, W:Add, Z:Discontinued, F:Interchangeable by set, K:Q'ty Change

++ CONTINUE ++

Copyright (C) 2014 YANMAR CO., LTD. All RightsReserved.

Fig.2. GEAR HOUSING

(A)=3JH25A (D)=
(B)=3JH30A (E)=
(C)= (F)=

No.	Lev.	Parts No.	Description	Q'ty (A)	(B)	(C)	(D)	(E)	(F)	I	R
23-1	1	119802-01561	BOLT, STUD M8X25	1	1					R	
	(A=E02388)	(B=E02364)									
24	1	26366-080002	NUT, M8	3	3						
24-1	1	26306-080002	NUT, M8	3	3					R	
	(A=*2001.04)	(B=*2001.04)									
25	1	121850-51960	O-RING	1	1					W	
	(A=E02388)	(B=E02364)									
26	1	124240-01870	COVER	1	1						
26-1	1	124240-01871	COVER, PUMP	1	1					R	
	(A=E02388)	(B=E02364)									
27	1	129C26-01890	GASKET, HO-P	1	1						
28	1	26106-080252	BOLT, M8X 25 PLATED	3	3						
29	1	26306-080002	NUT, M8	1	1						

Remarks
(1)It is compatible by changing the gasket of No.2 into a liquefied gasket.

N:Old $\xleftarrow[\text{No}]{\text{Yes}}$ New, Q:Old $\xleftarrow[\text{Yes}]{\text{No}}$ New, R:Old $\xleftarrow[\text{Yes}]{\text{Yes}}$ New, S:Old $\xleftarrow[\text{No}]{\text{No}}$ New, W:Add, Z:Discontinued, F:Interchangeable by set, K:Q'ty Change

Copyright (C) 2014 YANMAR CO., LTD. All RightsReserved.

Fig.91. (2A)GEAR HOUSING(WITH HAND STARTING SPEC)(OPTIONAL)

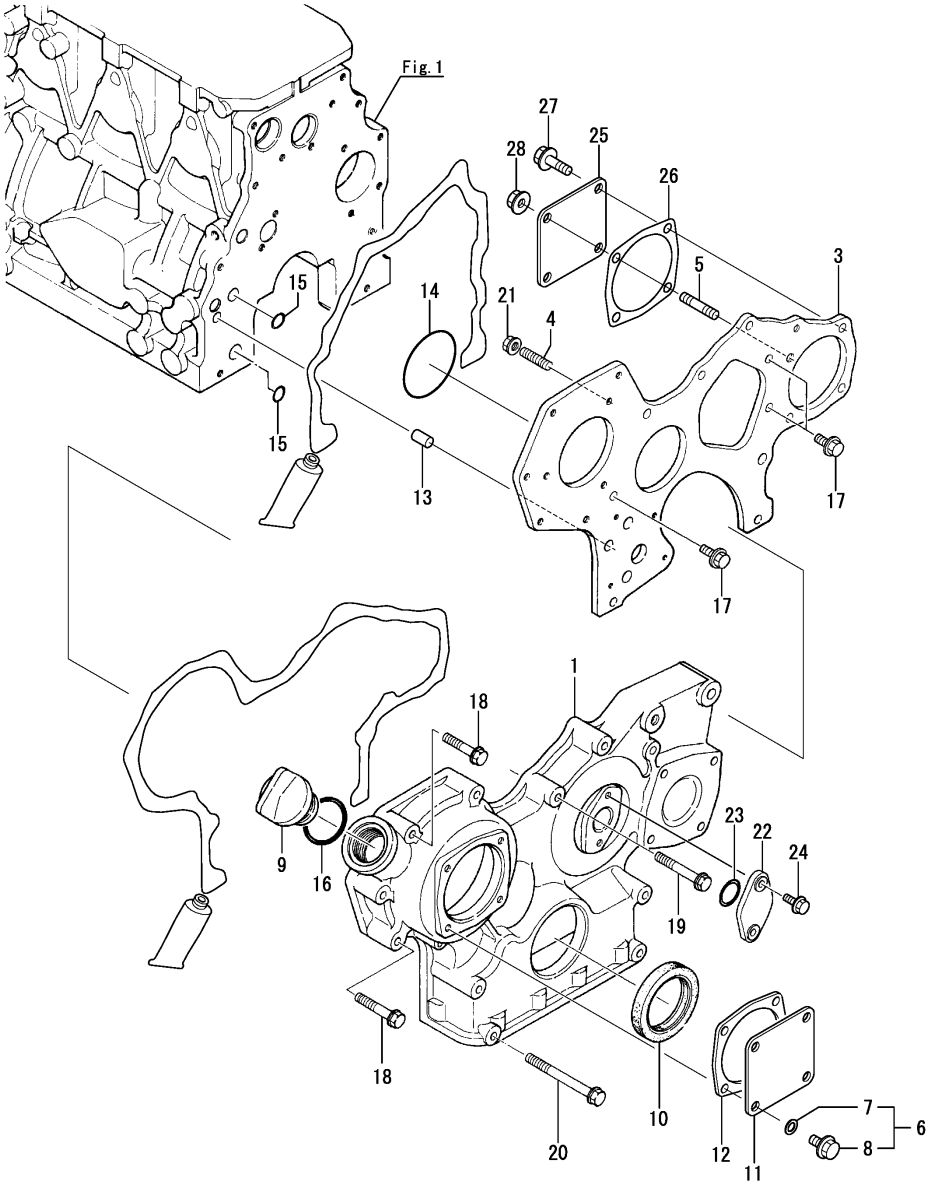

(A)=3JH25A (D)=
(B)=3JH30A (E)=
(C)= (F)=

No.	Lev.	Parts No.	Description	Q'ty (A)	(B)	(C)	(D)	(E)	(F)	I	R
1	1	129191-01500	CASE, GEAR	1	1						
3	1	129100-01520	FLANGE, GEAR CASE	1	1						
4	1	119802-01561	BOLT, STUD M8X25	3	3						
5	1	119802-01561	BOLT, STUD M8X25	1	1						
6	1	124550-01590	BOLT, M8X16	4	4						
7	2	22190-080002	WASHER, SEAL 8	4	4						
8	2	26106-080162	BOLT, M8X 16 PLATED	4	4						
9	1	124160-01751	CAP, FILLER	1	1						
10	1	129795-01800	SEAL, OIL	1	1						
11	1	124240-01871	COVER, PUMP	1	1						
12	1	129C26-01890	GASKET, HO-P	1	1						
13	1	129795-01950	PIPE, DOWEL L=18	2	2						
14	1	121850-51960	O-RING	1	1						
15	1	24311-000160	O-RING, 1AP16.0	2	2						
16	1	24311-000320	O-RING, 1AP32.0	1	1						
17	1	26106-080162	BOLT, M8X 16 PLATED	3	3						
18	1	26106-080452	BOLT, M8X 45 PLATED	6	6						
19	1	26106-080552	BOLT, M8X 55 PLATED	3	3						
20	1	26106-080852	BOLT, M8X 85 PLATED	4	4						
21	1	26306-080002	NUT, M8	3	3						
22	1	121023-01551	COVER	1	1						
23	1	24341-000240	O-RING, 1AS24.0	1	1						
24	1	26106-060162	BOLT, M6X 16 PLATED	2	2						
25	1	124240-01871	COVER, PUMP	1	1						
26	1	129C26-01890	GASKET, HO-P	1	1						
27	1	26106-080252	BOLT, M8X 25 PLATED	3	3						
28	1	26306-080002	NUT, M8	1	1						

N:Old $\overset{\text{Yes}}{\underset{\text{No}}{\leftrightarrows}}$ New, Q:Old $\overset{\text{No}}{\underset{\text{Yes}}{\leftrightarrows}}$ New, R:Old $\overset{\text{Yes}}{\underset{\text{Yes}}{\leftrightarrows}}$ New, S:Old $\overset{\text{No}}{\underset{\text{No}}{\leftrightarrows}}$ New, W:Add, Z:Discontinued, F:Interchangeable by set, K:Q'ty Change

Copyright (C) 2014 YANMAR CO., LTD. All RightsReserved.

Fig.3. FLYWHEEL HOUSING

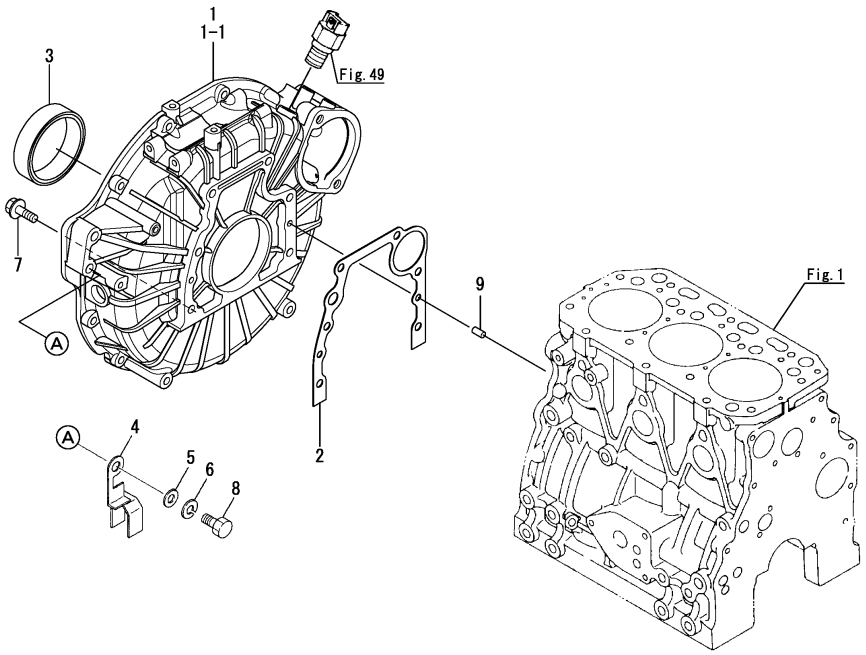

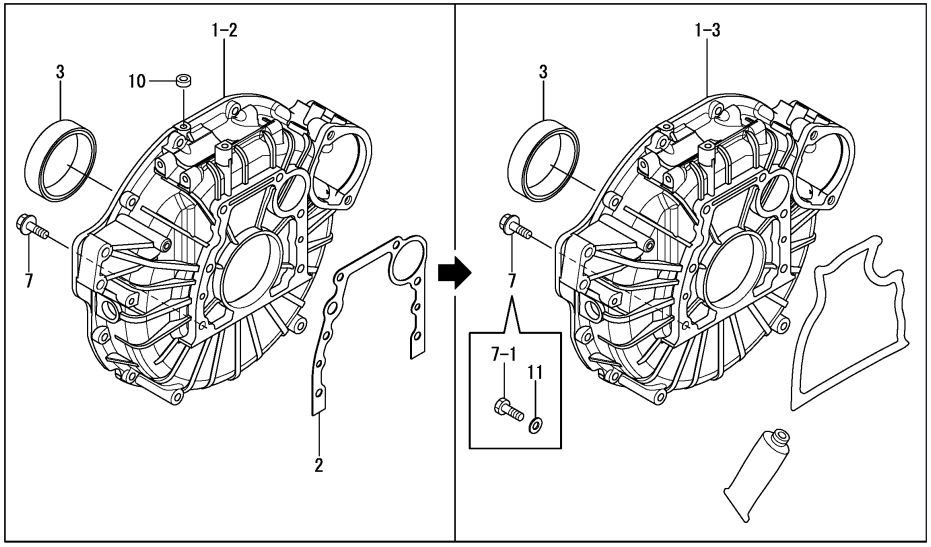

(A)=3JH25A (D)=
(B)=3JH30A (E)=
(C)= (F)=

No.	Lev.	Parts No.	Description	Q'ty (A)	(B)	(C)	(D)	(E)	(F)	I	R
1	1	129400-01600	HOUSING, FLYWHEEL	1	1						
1-1	1	129400-01601	HOUSING, FLYWHEEL	1	1					R	
	(A=*1996.01)	(B=*1996.01)									
1-2	1	129673-01600	HOUSING, FLYWHEEL	1	1					S	1
	(A=*2001.11)	(B=*2001.11)									
1-3	1	129673-01620	HOUSING, FLYWHEEL	1	1					S	2
	(A=E00106)	(B=E00111)									
2	1	129100-01620	GASKET	1	1					Z	
	(A=E00106)	(B=E00111)									
3	1	129795-01780	SEAL, OIL	1	1						
4	1	129198-01900	COVER	1	1						
4-1	1	129198-01901	COVER	1	1					S	
	(A=*1996.01)	(B=*1996.01)									
5	1	22117-120000	WASHER, 12	1	1						
5-1	1	22117-080000	WASHER, 8	1	1					S	
	(A=*1996.01)	(B=*1996.01)									
6	1	22287-120000	WASHER, 12	1	1						
6-1	1	22287-080000	WASHER, 8	1	1					S	
	(A=*1996.01)	(B=*1996.01)									
7	1	26106-100302	BOLT, M10X 30 PLATED	6	6						
7-1	1	26206-100302	BOLT, M10X 30 PLATED	6	6					R	
	(A=*2003.09)	(B=*2003.09)									
8	1	26116-120252	BOLT, M12X 25 PLATED	1	1						
8-1	1	26116-080202	BOLT, M8X 20 PLATED	1	1					S	
	(A=*1996.01)	(B=*1996.01)									
9	1	22312-080160	PIN, PARALLEL M8X16	2	2						
10	1	106500-44810	SPACER, PULLEY	1	1					W	1
	(A=*2001.11)	(B=*2001.11)									
10-1	1	106500-44810	SPACER, PULLEY	1	1					Z	
	(A=E00106)	(B=E00111)									
11	1	22137-100000	WASHER, 10	6	6					W	
	(A=*2003.09)	(B=*2003.09)									

Remarks
(1)Interchangeable by simultaneous replacement with No.1-2 and No.10.
(2)It is compatible by changing the gasket of No.2 into a liquefied gasket.

N:Old $\xleftarrow[\text{No}]{\text{Yes}}$ New, Q:Old $\xleftarrow[\text{Yes}]{\text{No}}$ New, R:Old $\xleftrightarrow[\text{Yes}]{\text{Yes}}$ New, S:Old $\xleftrightarrow[\text{No}]{\text{No}}$ New, W:Add, Z:Discontinued, F:Interchangeable by set, K:Q'ty Change

Copyright (C) 2014 YANMAR CO., LTD. All RightsReserved.

Fig.57. (3A)FLYWHEEL HOUSING SPACER(WITH HAND STARTING SPEC)(OPTIONAL)

(A)=3JH25A
(B)=3JH30A
(C)=
(D)=
(E)=
(F)=

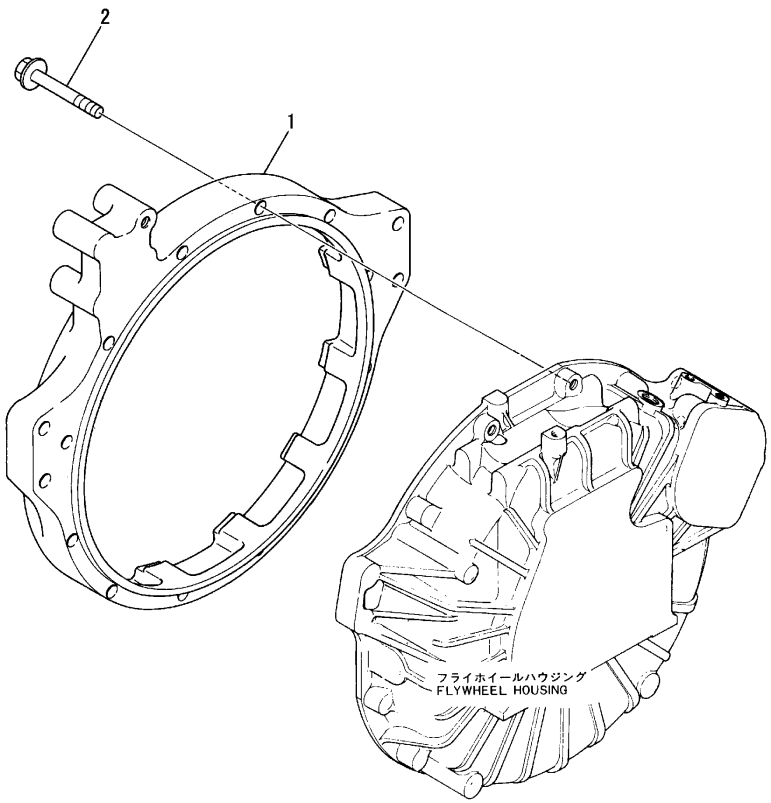

No.	Lev.	Parts No.	Description	Q'ty (A)	(B)	(C)	(D)	(E)	(F)	I	R
1	1	129198-01650	SPACER	1	1						
2	1	26106-100802	BOLT, M10X 80 PLATED	12	12						

N:Old ◄Yes/No► New, Q:Old ◄No/Yes► New, R:Old ◄Yes/Yes► New, S:Old ◄No/No► New, W:Add, Z:Discontinued, F:Interchangeable by set, K:Q'ty Change

Copyright (C) 2014 YANMAR CO., LTD. All RightsReserved.

Fig.4. LUB. OIL SUMP

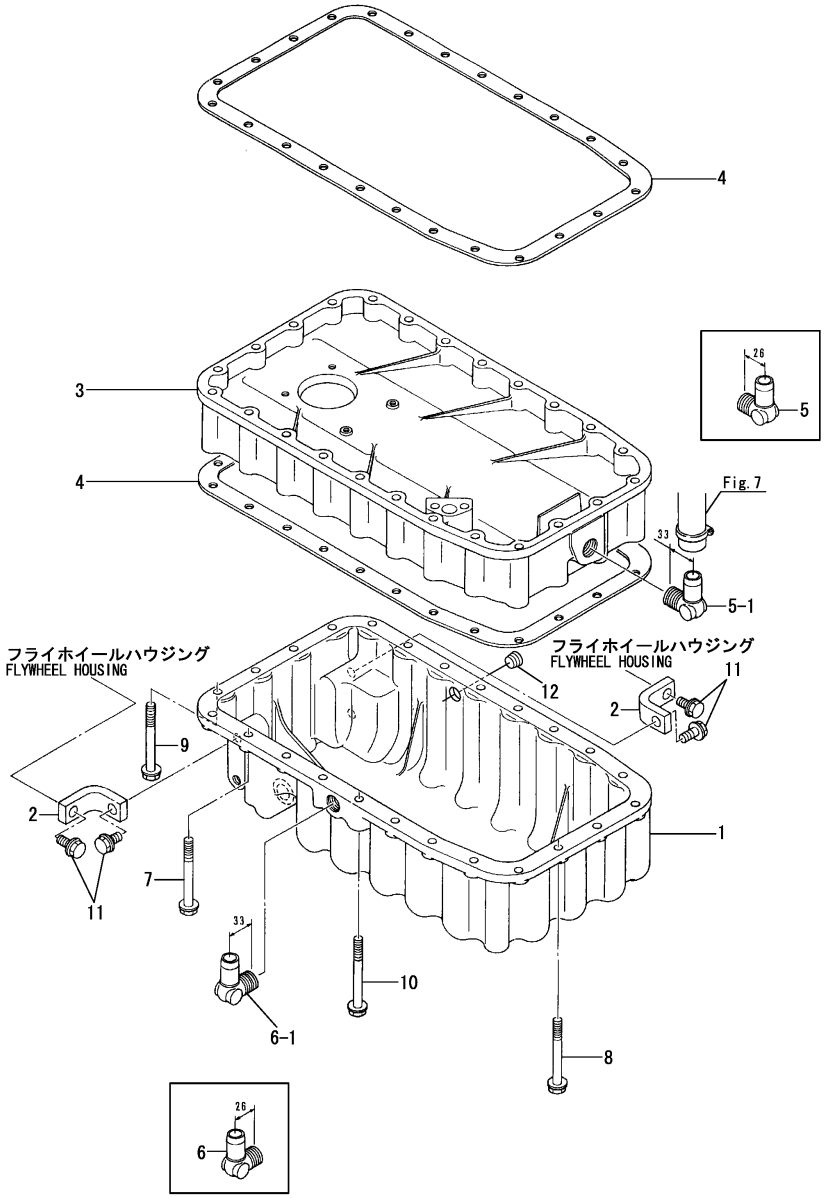

(A)=3JH25A (D)=
(B)=3JH30A (E)=
(C)= (F)=

No.	Lev.	Parts No.	Description	Q'ty (A)	(B)	(C)	(D)	(E)	(F)	I	R
1	1	129170-01700	SUMP, OIL	1	1						
1-1	1	129170-01701	SUMP, OIL	1	1					R	
	(A=*1992.12)	(B=*1992.12)									
2	1	129470-01710	BRACKET	2	2						
3	1	129198-01730	SPACER, OIL SUMP	1	1						
4	1	129170-01750	GASKET, OIL SUMP	2	2						
4-1	1	129198-01750	GASKET, OIL SUMP	2	2					N	
	(A=*1988.07)	(B=*1988.07)									
5	1	129198-01790	ELBOW, PT3/8	1	1						
5-1	1	129198-01791	ELBOW, PT3/8	1	1					N	
	(A=E00723)	(B=E00439)									
6	1	129198-01790	ELBOW, PT3/8	1	1						
6-1	1	129198-01791	ELBOW, PT3/8	1	1					N	
	(A=E00723)	(B=E00439)									
7	1	26106-080752	BOLT, M8X 75 PLATED	10	10						
8	1	26106-080752	BOLT, M8X 75 PLATED	6	6						
9	1	26106-080752	BOLT, M8X 75 PLATED	4	4						
10	1	26106-080902	BOLT, M8X 90 PLATED	4	4						
11	1	26106-100252	BOLT, M10X 25 PLATED	4	4						
12	1	23875-030000	PLUG, R03	1	1						

Remarks
* Change standard to parts of the Free Fall specification [Refer to Fig.87(76C)].

N:Old $\xleftarrow[\text{No}]{\text{Yes}}$ New, Q:Old $\xleftarrow[\text{Yes}]{\text{No}}$ New, R:Old $\xleftarrow[\text{Yes}]{\text{Yes}}$ New, S:Old $\xleftarrow[\text{No}]{\text{No}}$ New, W:Add, Z:Discontinued, F:Interchangeable by set, K:Q'ty Change

Copyright (C) 2014 YANMAR CO., LTD. All RightsReserved.

Fig.5. MAIN METAL

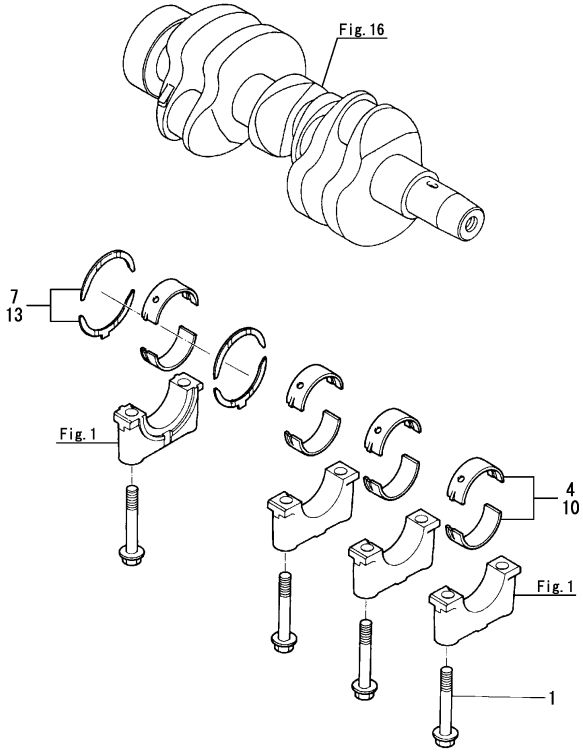

(A)=3JH25A (D)=
(B)=3JH30A (E)=
(C)= (F)=

No.	Lev.	Parts No.	Description	Q'ty (A)	(B)	(C)	(D)	(E)	(F)	I	R
1	1	129150-02020	BOLT, METAL CAP	8	8						
4	1	129150-02800	BEARING ASSY, MAIN	4	4						
4-1	1	129690-02800	BEARING, MAIN	4	4					R	
	(A=*2000.08)	(B=*2000.08)									
7	1	129150-02930	BEARING ASSY, THRUST	2	2						
7-1	1	129150-02931	BEARING ASSY, THRUST	2	2					N	
	(A=E02597)	(B=E02890)									
10	1	129690-02870	BEARING, 0.25 US	4	4						1
13	1	129150-02940	BEARING, THRUST 0.25	2	2						2
13-1	1	129150-02941	BEARING, THRUST 0.25	2	2					N	2
	(A=E02597)	(B=E02890)									

Remarks
(1)Under sized (U.S.=0.25) parts.
(2)Over sized (O.S.=0.25) parts.

N:Old $\frac{\text{Yes}}{\text{No}}$ New, Q:Old $\frac{\text{No}}{\text{Yes}}$ New, R:Old $\frac{\text{Yes}}{\text{Yes}}$ New, S:Old $\frac{\text{No}}{\text{No}}$ New, W:Add, Z:Discontinued, F:Interchangeable by set, K:Q'ty Change

Copyright (C) 2014 YANMAR CO., LTD. All RightsReserved.

Fig.6. CAMSHAFT METAL

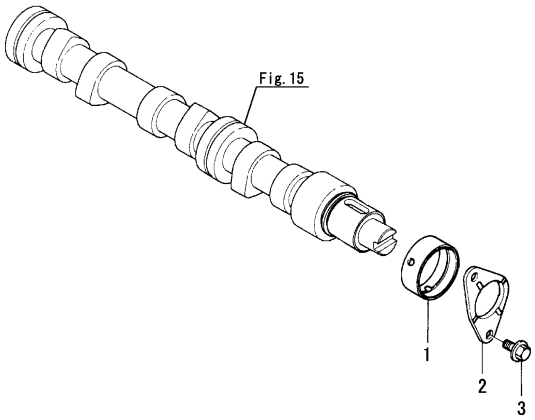

Remarks
(1)Refer to Fig.1.
(2)Refer to Fig.15.

(A)=3JH25A (D)=
(B)=3JH30A (E)=
(C)= (F)=

No.	Lev.	Parts No.	Description	Q'ty (A)	(B)	(C)	(D)	(E)	(F)	I	R
1	1	129795-02411	BUSH, CAMSHAFT	1	1						
1-1	1	129795-02412	BUSH, CAMSHAFT	1	1					N	1
	(A=E02597)	(B=E02890)									
2	1	129150-02450	BEARING, THRUST	1	1					Z	2
	(A=E00106)	(B=E00111)									
3	1	26106-080162	BOLT, M8X 16 PLATED	2	2						
3-1	1	26106-080142	BOLT, M8X 14 PLATED	2	2					N	
	(A=*1996.05)	(B=*1996.05)									
3-2	1	26106-080142	BOLT, M8X 14 PLATED	2	2					Z	2
	(A=E00106)	(B=E00111)									

N:Old $\xleftrightarrow[\text{No}]{\text{Yes}}$ New, Q:Old $\xleftrightarrow[\text{Yes}]{\text{No}}$ New, R:Old $\xleftrightarrow[\text{Yes}]{\text{Yes}}$ New, S:Old $\xleftrightarrow[\text{No}]{\text{No}}$ New, W:Add, Z:Discontinued, F:Interchangeable by set, K:Q'ty Change

Copyright (C) 2014 YANMAR CO., LTD. All RightsReserved.

Fig.7. BREATHER

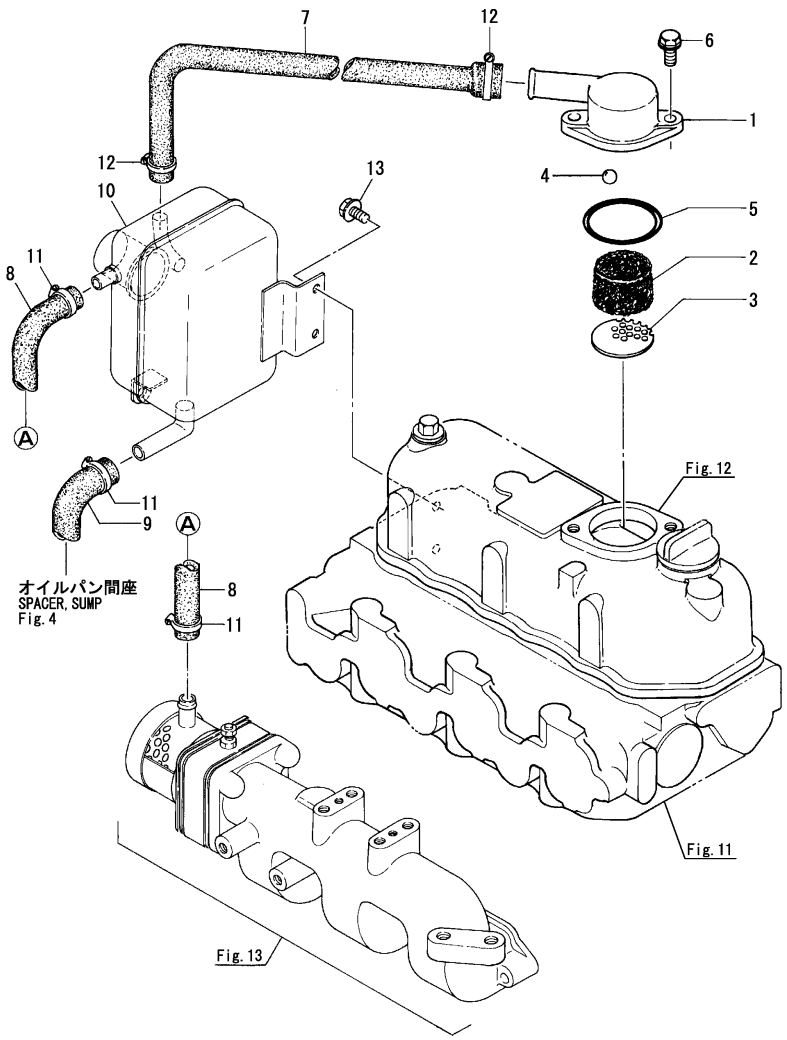

(A)=3JH25A (D)=
(B)=3JH30A (E)=
(C)= (F)=

No.	Lev.	Parts No.	Description	Q'ty (A)	(B)	(C)	(D)	(E)	(F)	I	R
1	1	129198-03010	COVER, BREATHER	1	1					Z	1
	(A=E00106)	(B=E00111)									
2	1	129150-03070	BAFFLE, BREATHER	1	1					Z	1
	(A=E00106)	(B=E00111)									
3	1	129750-03080	PLATE, BAFFLE	1	1					Z	1
	(A=E00106)	(B=E00111)									
4	1	24190-200001	BALL, STEEL 5/8	1	1					Z	1
	(A=E00106)	(B=E00111)									
5	1	24341-000500	O-RING, 1AS50.0	1	1					Z	1
	(A=E00106)	(B=E00111)									
6	1	26106-080202	BOLT, M8X 20 PLATED	2	2					Z	1
	(A=E00106)	(B=E00111)									
7	1	129198-03120	PIPE , BREATHER 380	1	1						
7-1	1	129495-03090	PIPE, L=370	1	1					R	
	(A=*1990.05)	(B=*1990.05)									
8	1	129198-03130	PIPE, BREATHER	1	1						
9	1	129198-03140	PIPE, BREATHER	1	1						
10	1	129198-03150	SEPARATOR, MIST	1	1						
11	1	23000-016000	CLAMP, 16	3	3						
12	1	23000-022000	CLAMP, 22	3	3						
13	1	26106-080122	BOLT, M8X 12 PLATED	2	2						

Remarks
(1)Refer to Fig.12

N:Old $\overset{\text{Yes}}{\underset{\text{No}}{\leftrightarrow}}$ New, Q:Old $\overset{\text{No}}{\underset{\text{Yes}}{\leftrightarrow}}$ New, R:Old $\overset{\text{Yes}}{\underset{\text{Yes}}{\leftrightarrow}}$ New, S:Old $\overset{\text{No}}{\underset{\text{No}}{\leftrightarrow}}$ New, W:Add, Z:Discontinued, F:Interchangeable by set, K:Q'ty Change

Copyright (C) 2014 YANMAR CO., LTD. All RightsReserved.

Fig.58. (7A)DECOMPRESSION(WITH HAND STARTING SPEC)(OPTIONAL)

(A)=3JH25A
(B)=3JH30A
(C)=
(D)=
(E)=
(F)=

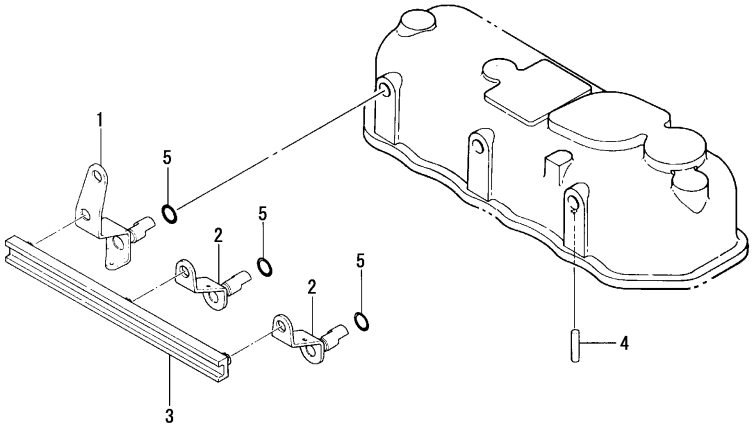

No.	Lev.	Parts No.	Description	Q'ty (A)	(B)	(C)	(D)	(E)	(F)	I	R
1	1	129198-03730	DECOMPRESSION	1	1					Z	
	(A=E00106)	(B=E00111)									
2	1	129198-03740	DECOMPRESSION	2	2					Z	
	(A=E00106)	(B=E00111)									
3	1	129198-03760	CONNECTOR	1	1					Z	
	(A=E00106)	(B=E00111)									
4	1	22312-030160	PIN, PARALLEL M3X16	3	3					Z	
	(A=E00106)	(B=E00111)									
5	1	24311-000070	O-RING, 1AP7.0	3	3					Z	
	(A=E00106)	(B=E00111)									

Remarks
* This item is applicable to [(A)(B)=May., 2003] or previous machines [Refer to Fig.92(12B)].

N:Old $\overset{\text{Yes}}{\underset{\text{No}}{\leftrightarrow}}$ New, Q:Old $\overset{\text{No}}{\underset{\text{Yes}}{\leftrightarrow}}$ New, R:Old $\overset{\text{Yes}}{\underset{\text{Yes}}{\leftrightarrow}}$ New, S:Old $\overset{\text{No}}{\underset{\text{No}}{\leftrightarrow}}$ New, W:Add, Z:Discontinued, F:Interchangeable by set, K:Q'ty Change

Copyright (C) 2014 YANMAR CO., LTD. All RightsReserved.

Fig.8. ENGINE LIFTER

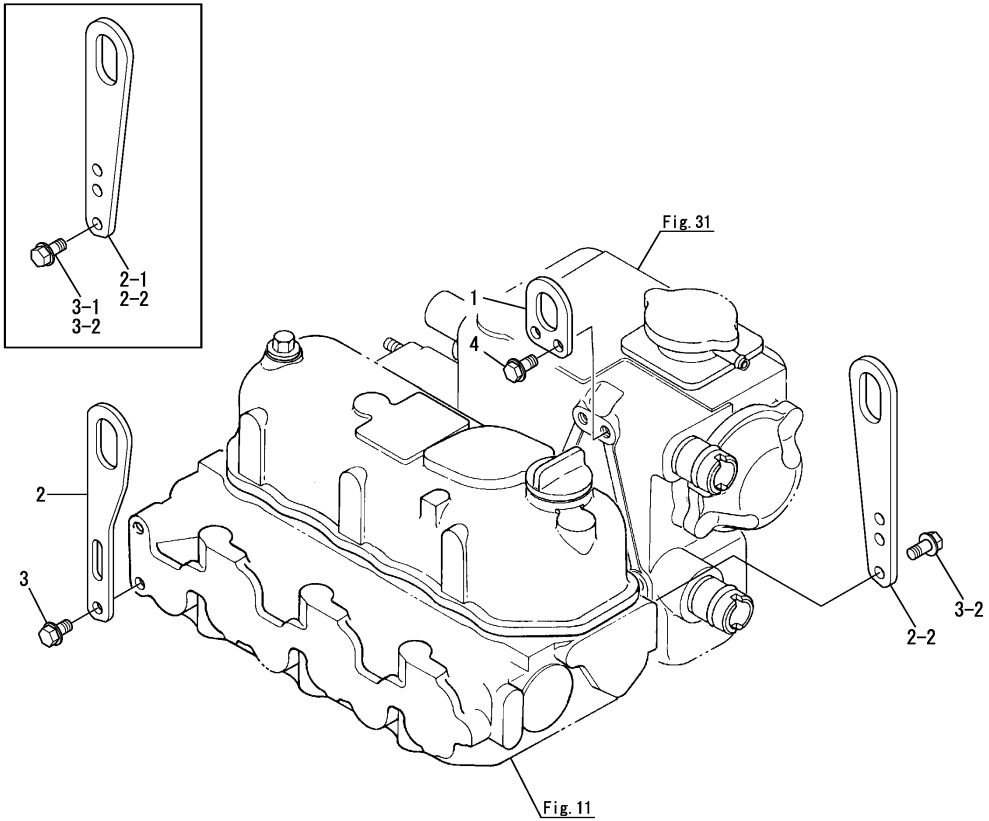

(A)=3JH25A (D)=
(B)=3JH30A (E)=
(C)= (F)=

No.	Lev.	Parts No.	Description	Q'ty (A)	(B)	(C)	(D)	(E)	(F)	I	R
1	1	129470-07230	LIFTER	1	1						
2	1	124736-07900	LIFTER, ENGINE	1	1						
2-1	1	129900-07900	LIFTER, ENGINE	1	1					N	
	(A=*1996.06)	(B=*1996.06)									
2-2	1	129900-07900	LIFTER, ENGINE	2	2					K	
	(A=E00106)	(B=E00111)									
3	1	26106-080142	BOLT, M8X 14 PLATED	2	2						
3-1	1	26106-080162	BOLT, M8X 16 PLATED	2	2					N	
	(A=*1996.06)	(B=*1996.06)									
3-2	1	26106-080162	BOLT, M8X 16 PLATED	4	4					K	
	(A=E00106)	(B=E00111)									
4	1	26106-080162	BOLT, M8X 16 PLATED	2	2						

N:Old $\xleftarrow[\text{No}]{\text{Yes}}$ New, Q:Old $\xleftarrow[\text{Yes}]{\text{No}}$ New, R:Old $\xleftarrow[\text{Yes}]{\text{Yes}}$ New, S:Old $\xleftarrow[\text{No}]{\text{No}}$ New, W:Add, Z:Discontinued, F:Interchangeable by set, K:Q'ty Change

Copyright (C) 2014 YANMAR CO., LTD. All RightsReserved.

Fig.9. LABELS

(A)=3JH25A (D)=
(B)=3JH30A (E)=
(C)= (F)=

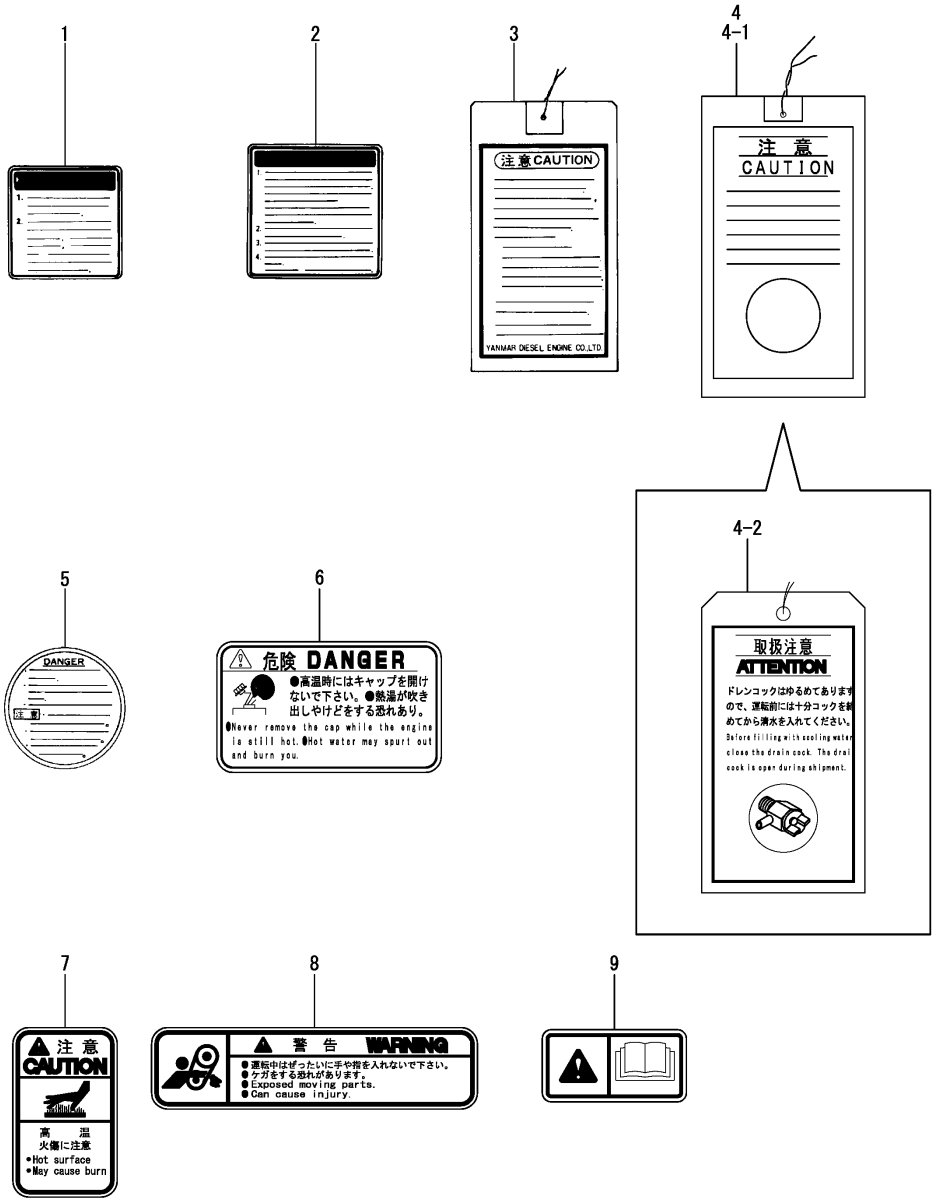

No.	Lev.	Parts No.	Description	Q'ty (A)	(B)	(C)	(D)	(E)	(F)	I	R
1	1	129198-07200	LABEL, WATER PUMP	1	1					Z	
	(A=*1996.12)	(B=*1996.12)									
2	1	129198-07350	LABEL, TANK	1	1					Z	
	(A=*1996.12)	(B=*1996.12)									
3	1	129198-07360	LABEL, CAUTION TAG	1	1					Z	
	(A=*1996.12)	(B=*1996.12)									
4	1	123682-07850	LABEL, CAUTION	1	1						
4-1	1	123682-07851	LABEL, CAUTION	1	1					N	
	(A=*1995.10)	(B=*1995.10)									
4-2	1	123682-07852	LABEL, CAUTION	1	1					N	
	(A=*2002.07)	(B=*2002.07)									
5	1	120445-44620	LABEL, CAUTION	1	1					Z	
	(A=*1996.12)	(B=*1996.12)									
6	1	128296-07260	LABEL, DANGER	1	1					W	
	(A=*1996.12)	(B=*1996.12)									
7	1	128296-07300	LABEL, DANGER	1	1					W	
	(A=*1996.12)	(B=*1996.12)									
8	1	128296-07360	LABEL, CAUTION	1	1					W	
	(A=*1996.12)	(B=*1996.12)									
9	1	196630-12980	LABEL, CAUTION	1	1					W	
	(A=*1996.12)	(B=*1996.12)									

N:Old $\xleftarrow[\text{No}]{\text{Yes}}$ New, Q:Old $\xleftarrow[\text{Yes}]{\text{No}}$ New, R:Old $\xleftarrow[\text{Yes}]{\text{Yes}}$ New, S:Old $\xleftarrow[\text{No}]{\text{No}}$ New, W:Add, Z:Discontinued, F:Interchangeable by set, K:Q'ty Change

Copyright (C) 2014 YANMAR CO., LTD. All RightsReserved.

Fig.10. ENGINE BRACKET

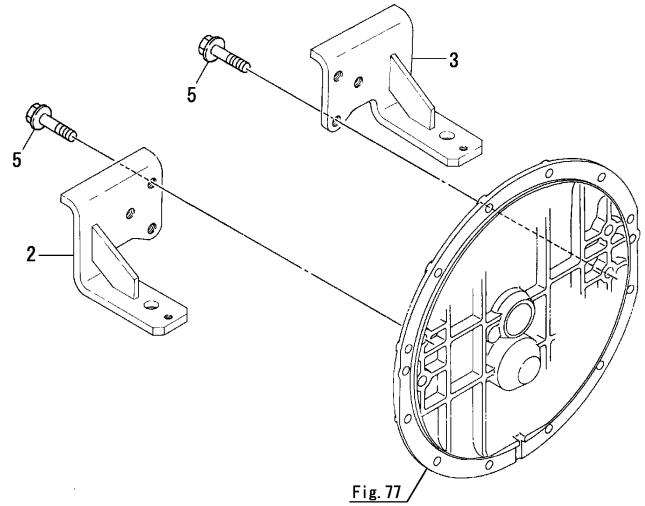

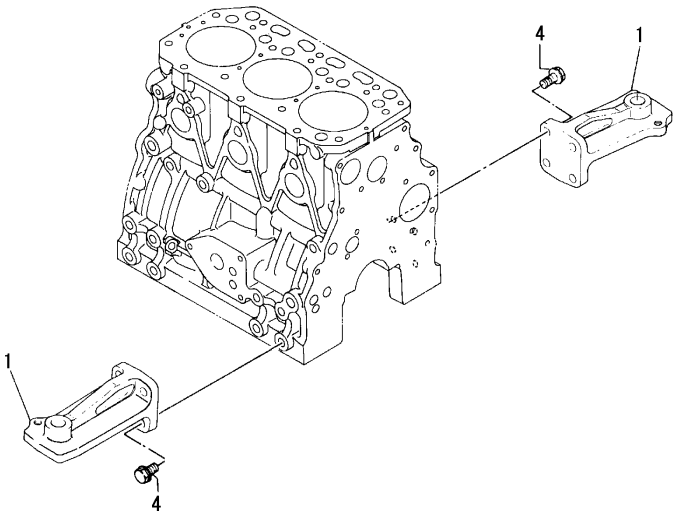

(A)=3JH25A (D)=
(B)=3JH30A (E)=
(C)= (F)=

No.	Lev.	Parts No.	Description	Q'ty (A)	(B)	(C)	(D)	(E)	(F)	I	R
1	1	129490-08100	FOOT, MOUNTING	2	2						
2	1	129198-08150	FOOT, MOUNTING	1	1						
3	1	129198-08160	FOOT, MOUNTING	1	1						
4	1	26106-100202	BOLT, M10X 20 PLATED	8	8						
5	1	26116-120302	BOLT, M12X 30 PLATED	6	6						
5-1	1	26116-120252	BOLT, M12X 25 PLATED	6	6					N	
	(A=*2001.10)		(B=*2001.10)								

N:Old $\xleftarrow[\text{No}]{\text{Yes}}$ New, Q:Old $\xleftarrow[\text{Yes}]{\text{No}}$ New, R:Old $\xleftarrow[\text{Yes}]{\text{Yes}}$ New, S:Old $\xleftarrow[\text{No}]{\text{No}}$ New, W:Add, Z:Discontinued, F:Interchangeable by set, K:Q'ty Change

Copyright (C) 2014 YANMAR CO., LTD. All RightsReserved.

Fig.60. (10A)MOUNTING FOOT(WITH HAND STARTING SPEC)(OPTIONAL)

(A)=3JH25A
(B)=3JH30A
(C)=
(D)=
(E)=
(F)=

No.	Lev.	Parts No.	Description	Q'ty (A)	(B)	(C)	(D)	(E)	(F)	I	R
1	1	129490-08100	FOOT, MOUNTING	2	2						
2	1	129198-08110	FOOT, MOUNTING	2	2						
3	1	26106-100202	BOLT, M10X 20 PLATED	8	8						
4	1	26116-120302	BOLT, M12X 30 PLATED	4	4						
4-1	1	26116-120252	BOLT, M12X 25 PLATED	4	4					N	
	(A=*1997.08)	(B=*1997.08)									

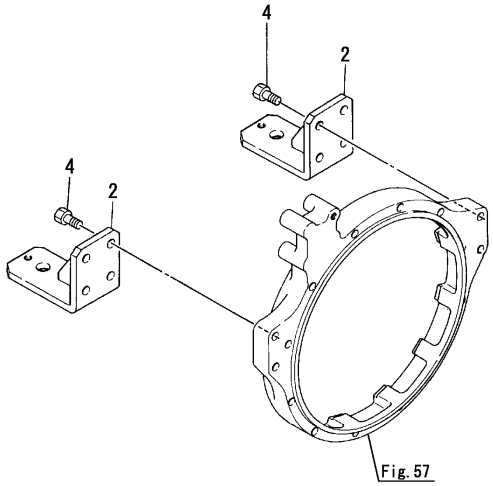

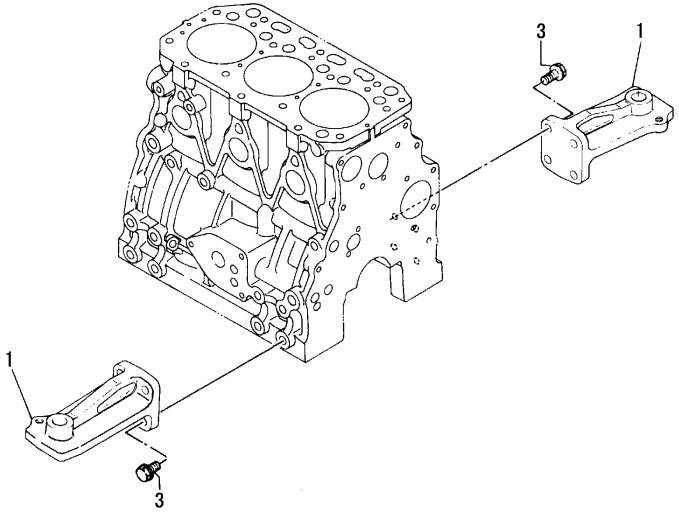

N:Old $\xleftrightarrow[\text{No}]{\text{Yes}}$ New, Q:Old $\xleftrightarrow[\text{Yes}]{\text{No}}$ New, R:Old $\xleftrightarrow[\text{Yes}]{\text{Yes}}$ New, S:Old $\xleftrightarrow[\text{No}]{\text{No}}$ New, W:Add, Z:Discontinued, F:Interchangeable by set, K:Q'ty Change

Copyright (C) 2014 YANMAR CO., LTD. All RightsReserved.

Fig.61. (10B)ENGINE BED & FOUNDATION BOLT(OPTIONAL)

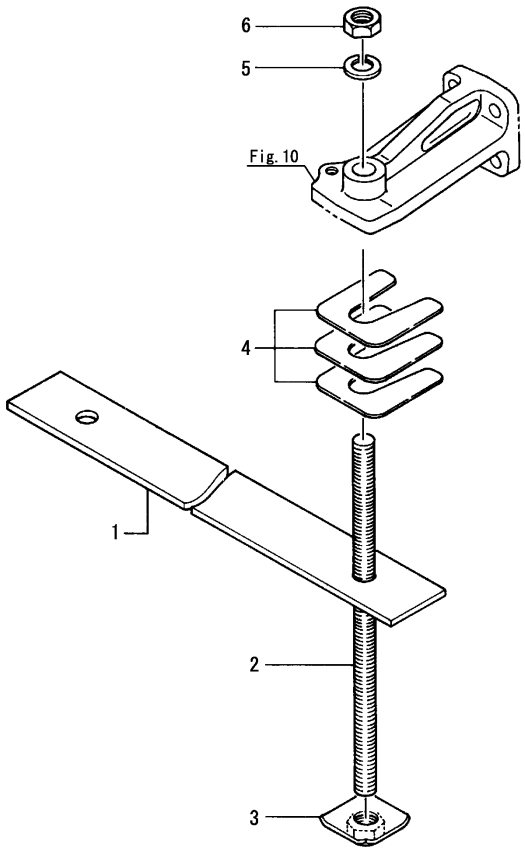

(A)=3JH25A
(B)=3JH30A
(C)=
(D)=
(E)=
(F)=

No.	Lev.	Parts No.	Description	Q'ty (A)	(B)	(C)	(D)	(E)	(F)	I	R
1	1	129198-08130	PLATE	2	2						
2	1	124220-92700	BOLT, FOUNDATION	4	4						
3	1	124220-92920	NUT ASSY	4	4						
4	1	123672-92950	SHIM	1	1						
5	1	22212-140000	SPRING WASHER 14	4	4						
6	1	26716-140002	NUT, M14	4	4						

N:Old $\frac{\text{Yes}}{\text{No}}$ New, Q:Old $\frac{\text{No}}{\text{Yes}}$ New, R:Old $\frac{\text{Yes}}{\text{Yes}}$ New, S:Old $\frac{\text{No}}{\text{No}}$ New, W:Add, Z:Discontinued, F:Interchangeable by set, K:Q'ty Change

Copyright (C) 2014 YANMAR CO., LTD. All RightsReserved.

Fig.11. CYLINDER HEAD

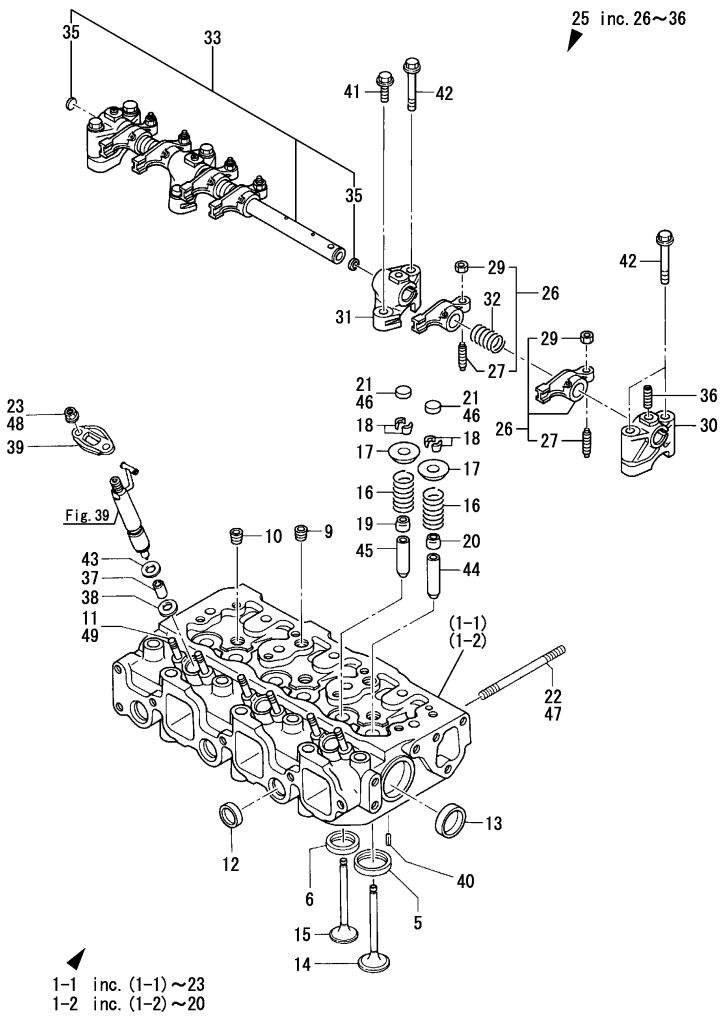

Remarks
(1)Spare parts.
(2)Interchangeable by simultaneous replacement with No.1-2, 46, 47, 48 & 49.
(3)Refer to Fig.39

(A)=3JH25A (D)=
(B)=3JH30A (E)=
(C)= (F)=

No.	Lev.	Parts No.	Description	Q'ty (A)	(B)	(C)	(D)	(E)	(F)	I	R
1-1	1	729198-11710	HEAD ASSY, CYLINDER	1	1						
1-2	1	129198-11700	HEAD ASSY, CYLINDER	1	1					S	2
	(A=E00106)	(B=E00111)									
5	3	129470-11080	SEAT, SUCTION VALVE	3	3						
5-1	3	129470-11850	SEAT, EXHAUST VALVE	3	3					R	
	(A=*1987.05)	(B=*1987.05)									
5-2	3	129470-11080	SEAT, SUCTION VALVE	3	3					R	
	(A=E00161)	(B=E00165)									
6	3	129470-11090	SEAT, EXHAUST VALVE	3	3						
9	3	121850-11860	PLUG, PT1/4	2	2						
10	3	23876-030000	PLUG, R03	3	3						
11	3	26216-060202	STUD, M6X 20	6	6					Z	
	(A=*2008.04)	(B=*2008.04)									
12	3	27241-220000	PLUG, 22	3	3						
13	3	27241-400000	PLUG, 40	2	2						
14	2	129100-11100	VALVE, SUCTION	3	3						
15	2	129100-11110	VALVE, EXHAUST	3	3						
15-1	2	129100-11111	VALVE, EXHAUST	3	3					R	
	(A=E01299)	(B=E01259)									
15-2	2	129100-11112	VALVE, EXHAUST	3	3					R	
	(A=E01964)	(B=E01950)									
16	2	129795-11120	SPRING, VALVE	6	6						
17	2	129795-11180	RETAINER, SPRING	6	6						
18	2	103338-11190	COTTER	6	6						
18-1	2	27310-080001	COTTER, 8	6	6					R	
	(A=*1994.10)	(B=*1994.10)									
19	2	121400-11340	SEAL, VALVE STEM	3	3						
20	2	124460-11340	SEAL, VALVE STEM	3	3						
21	2	104511-11370	CAP, VALVE	6	6					Z	
	(A=E00106)	(B=E00111)									
22	2	26216-081002	STUD, M8X100	2	2					Z	
	(A=E00106)	(B=E00111)									
23	2	26367-060002	NUT, M6	6	6					Z	
	(A=E00106)	(B=E00111)									
25	1	129155-11241	SHAFT ASSY, ROCKER	1	1						
26	2	729150-11651	ARM ASSY, ROCKER	6	6						
26-1	2	729402-11650	ARM ASSY, ROCKER	6	6					R	
	(A=*1990.06)	(B=*1990.06)									
27	3	129150-11230	SCREW, VALVE ADJUST	6	6						
29	3	129150-11750	NUT, M8	6	6						
30	2	129155-11260	SUPPORT, ROCKER ARM	2	2						
31	2	129155-11270	SUPPORT, ROCKER ARM	2	2						
32	2	129150-11280	SPRING, ROCKER	3	3						
33	2	129150-11290	SHAFT, ROCKER ARM	1	1						
35	3	27241-100000	PLUG, 10	2	2						
36	2	26226-080182	STUD, M8X 18	3	3						
36-1	2	119802-11280	BOLT, STUD	3	3					R	
	(A=*2001.11)	(B=*2001.11)									
37	1	119625-11870	PROTECTOR, NOZZLE	3	3						
38	1	119625-11880	SEAT, NOZZLE	3	3						
39	1	119625-11900	RETAINER, NOZZLE	3	3						

N:Old $\overset{\text{Yes}}{\underset{\text{No}}{\leftrightarrow}}$ New, Q:Old $\overset{\text{No}}{\underset{\text{Yes}}{\leftrightarrow}}$ New, R:Old $\overset{\text{Yes}}{\underset{\text{Yes}}{\leftrightarrow}}$ New, S:Old $\overset{\text{No}}{\underset{\text{No}}{\leftrightarrow}}$ New, W:Add, Z:Discontinued, F:Interchangeable by set, K:Q'ty Change

++ CONTINUE ++

Copyright (C) 2014 YANMAR CO., LTD. All RightsReserved.

Fig.11. CYLINDER HEAD

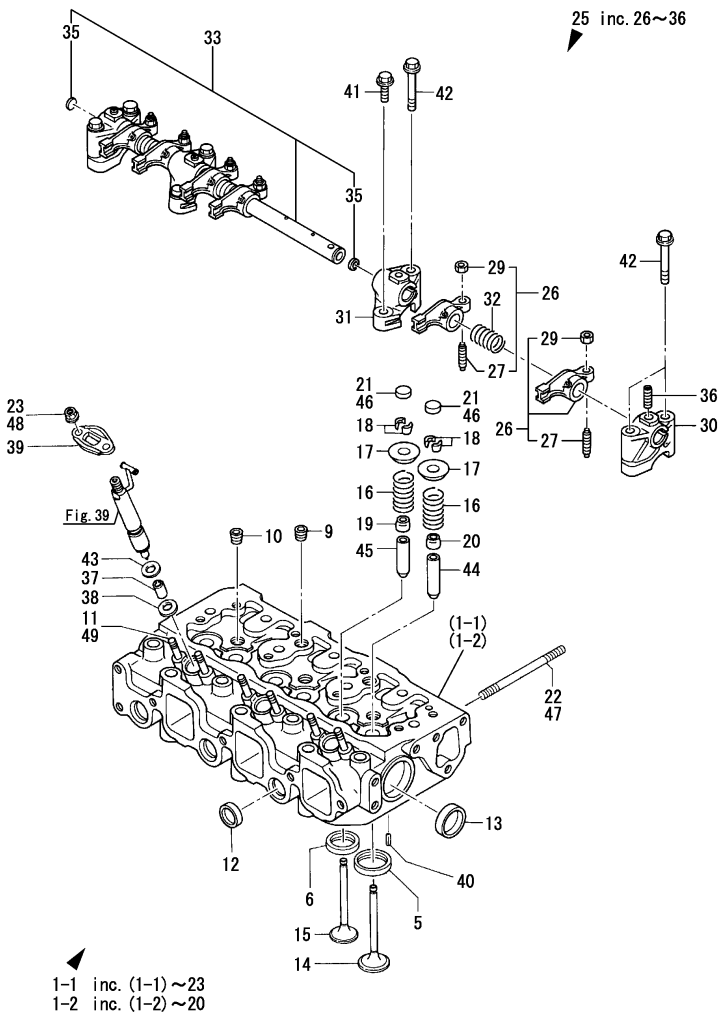

Remarks
(1)Spare parts.
(2)Interchangeable by simultaneous replacement with No.1-2, 46, 47, 48 & 49.
(3)Refer to Fig.39

(A)=3JH25A (D)=
(B)=3JH30A (E)=
(C)= (F)=

No.	Lev.	Parts No.	Description	Q'ty (A)	(B)	(C)	(D)	(E)	(F)	I	R
40	1	22351-060012	PIN, SPRING 6.0X12	2	2						
41	1	26106-080252	BOLT, M8X 25 PLATED	2	2						
42	1	26106-080502	BOLT, M8X 50 PLATED	6	6						
43	1	129470-11920	GASKET	3	3					Z	3
	(A=*1987.05)	(B=*1987.05)									
44	1	120130-11860	GUIDE, VALVE	3	3						1
45	1	129150-11810	GUIDE, VALVE	3	3						1
46	1	104511-11370	CAP, VALVE	6	6					W	2
	(A=E00106)	(B=E00111)									
46-1	1	129150-11370	CAP, VALVE	6	6					R	
	(A=E00147)	(B=E00146)									
47	1	26216-081002	STUD, M8X100	2	2					W	2
	(A=E00106)	(B=E00111)									
47-1	1	129693-44300	BOLT, STUD	2	2					R	
	(A=E00147)	(B=E00146)									
48	1	26367-060002	NUT, M6	6	6					W	2
	(A=E00106)	(B=E00111)									
49	1	26216-060202	STUD, M6X 20	6	6					W	2
	(A=*2008.04)	(B=*2008.04)									

N:Old $\frac{\text{Yes}}{\text{No}}$ New, Q:Old $\frac{\text{No}}{\text{Yes}}$ New, R:Old $\frac{\text{Yes}}{\text{Yes}}$ New, S:Old $\frac{\text{No}}{\text{No}}$ New, W:Add, Z:Discontinued, F:Interchangeable by set, K:Q'ty Change

Copyright (C) 2014 YANMAR CO., LTD. All RightsReserved.

Fig.12. BONNET

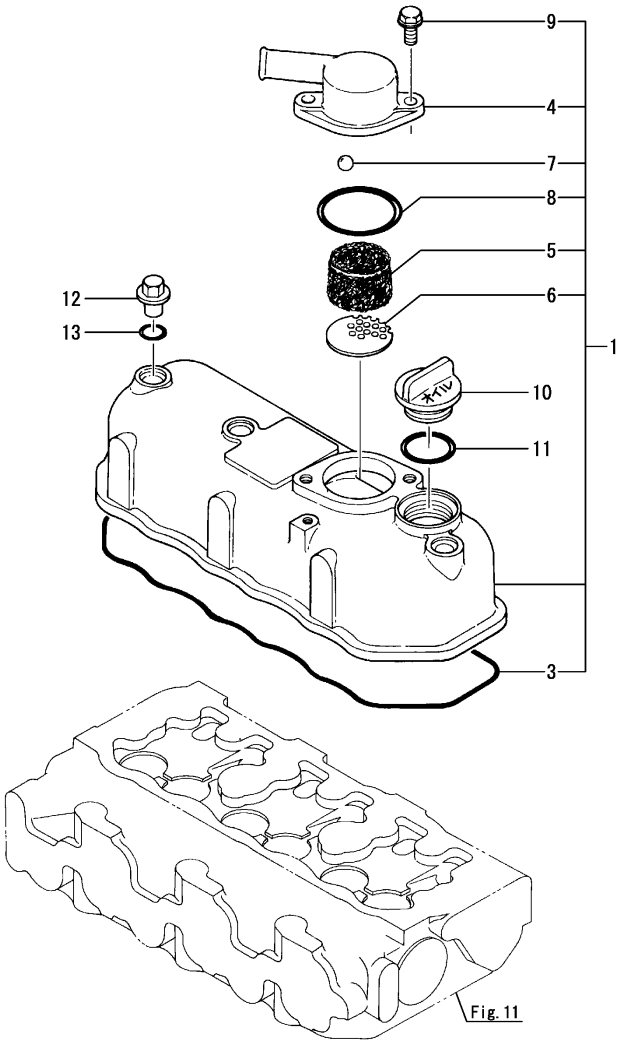

(A)=3JH25A (D)=
(B)=3JH30A (E)=
(C)= (F)=

No.	Lev.	Parts No.	Description	Q'ty (A)	(B)	(C)	(D)	(E)	(F)	I	R
1	1	729100-11520	BONNET ASSY, HEAD	1	1						
1-1	1	129198-11350	BONNET ASSY, HEAD	1	1					N	
	(A=E00106)	(B=E00111)									
3	2	129150-11310	GASKET, BONNET	1	1						
4	2	129198-03010	COVER, BREATHER	1	1						
5	2	129150-03070	BAFFLE, BREATHER	1	1						
6	2	121750-03080	PLATE, BAFFLE	1	1					Z	
	(A=E00106)	(B=E00111)									
6-1	2	129150-03080	PLATE, BAFFLE	1	1					W	
	(A=E00106)	(B=E00111)									
7	2	24190-200001	BALL, STEEL 5/8	1	1						
8	2	24341-000500	O-RING, 1AS50.0	1	1						
9	2	26106-080202	BOLT, M8X 20 PLATED	2	2						
10	1	124160-01751	CAP, FILLER	1	1						
11	1	121420-01760	O-RING	1	1						
11-1	1	24311-000320	O-RING, 1AP32.0	1	1					N	
	(A=*1988.05)	(B=*1988.05)									
12	1	124160-11360	KNOB	3	3						
13	1	24311-000120	O-RING, 1AP12.0	3	3						

N:Old $\overset{\text{Yes}}{\underset{\text{No}}{\leftrightarrows}}$ New, Q:Old $\overset{\text{No}}{\underset{\text{Yes}}{\leftrightarrows}}$ New, R:Old $\overset{\text{Yes}}{\underset{\text{Yes}}{\leftrightarrows}}$ New, S:Old $\overset{\text{No}}{\underset{\text{No}}{\leftrightarrows}}$ New, W:Add, Z:Discontinued, F:Interchangeable by set, K:Q'ty Change

Copyright (C) 2014 YANMAR CO., LTD. All RightsReserved.

Fig.62. (12A)BONNET(WITH HAND STARTING SPEC)(OPTIONAL)

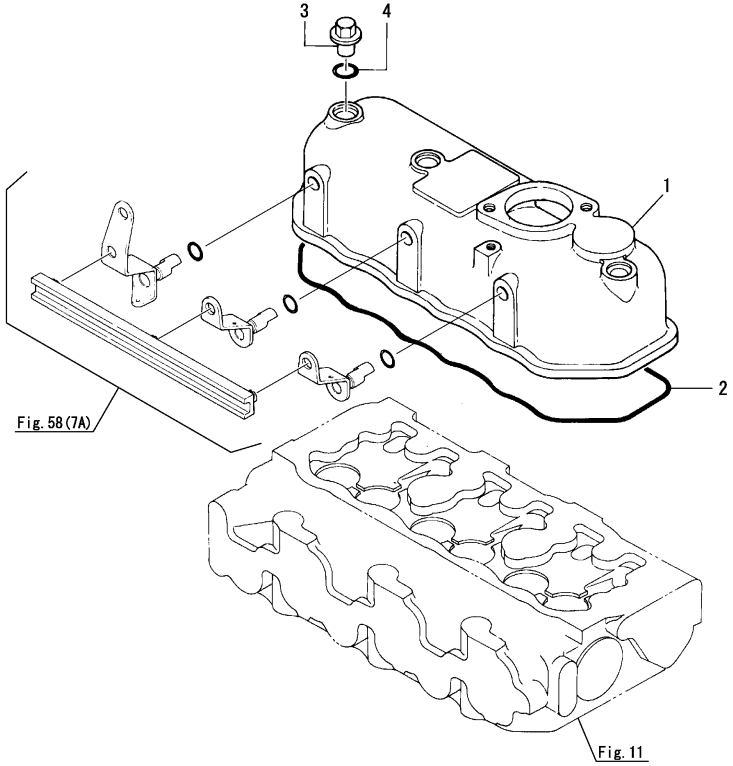

(A)=3JH25A (D)=
(B)=3JH30A (E)=
(C)= (F)=

No.	Lev.	Parts No.	Description	Q'ty (A)	(B)	(C)	(D)	(E)	(F)	I	R
1	1	129150-11300	BONNET	1	1					Z	
	(A=E00106)	(B=E00111)									
2	1	129150-11310	GASKET, BONNET	1	1					Z	
	(A=E00106)	(B=E00111)									
3	1	124160-11360	KNOB	3	3					Z	
	(A=E00106)	(B=E00111)									
4	1	24311-000120	O-RING, 1AP12.0	3	3					Z	
	(A=E00106)	(B=E00111)									

Remarks
* This item is applicable to [(A)(B)=May., 2003] or previous machines [Refer to Fig.92(12B)].

N:Old $\xleftrightarrow[\text{No}]{\text{Yes}}$ New, Q:Old $\xleftrightarrow[\text{Yes}]{\text{No}}$ New, R:Old $\xleftrightarrow[\text{Yes}]{\text{Yes}}$ New, S:Old $\xleftrightarrow[\text{No}]{\text{No}}$ New, W:Add, Z:Discontinued, F:Interchangeable by set, K:Q'ty Change

Copyright (C) 2014 YANMAR CO., LTD. All RightsReserved.

Fig.92. (12B)BONNET & DECOMPRESSION(WITH HAND STARTING SPEC)(OPTIONAL)

(A)=3JH25A
(B)=3JH30A
(C)=
(D)=
(E)=
(F)=

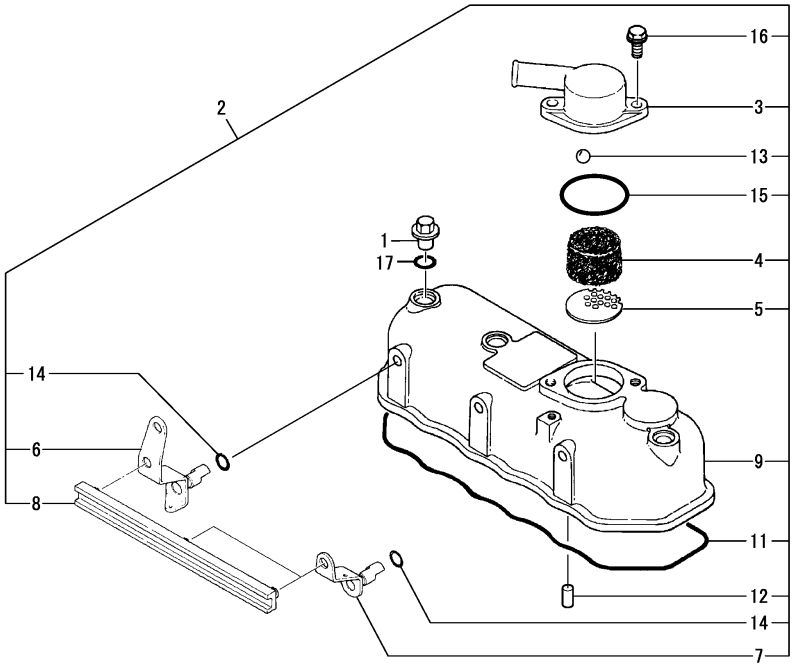

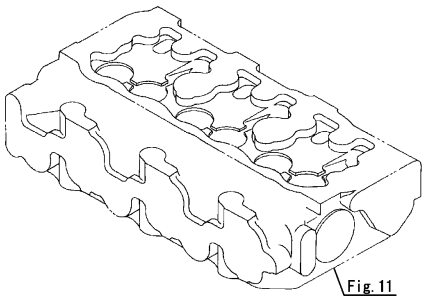

No.	Lev.	Parts No.	Description	Q'ty (A)	(B)	(C)	(D)	(E)	(F)	I	R
1	1	124160-11360	KNOB	3	3					W	
	(A=E00106)	(B=E00111)									
2	1	129198-11360	BONNET ASSY, HEAD	1	1					W	
	(A=E00106)	(B=E00111)									
3	2	129198-03010	COVER, BREATHER	1	1					W	
	(A=E00106)	(B=E00111)									
4	2	129150-03070	BAFFLE, BREATHER	1	1					W	
	(A=E00106)	(B=E00111)									
5	2	129150-03080	PLATE, BAFFLE	1	1					W	
	(A=E00106)	(B=E00111)									
6	2	129198-03730	DECOMPRESSION	1	1					W	
	(A=E00106)	(B=E00111)									
7	2	129198-03740	DECOMPRESSION	2	2					W	
	(A=E00106)	(B=E00111)									
8	2	129198-03760	CONNECTOR	1	1					W	
	(A=E00106)	(B=E00111)									
9	2	129150-11301	BONNET	1	1					W	
	(A=E00106)	(B=E00111)									
11	2	129150-11310	GASKET, BONNET	1	1					W	
	(A=E00106)	(B=E00111)									
12	2	22312-030160	PIN, PARALLEL M3X16	3	3					W	
	(A=E00106)	(B=E00111)									
13	2	24190-200001	BALL, STEEL 5/8	1	1					W	
	(A=E00106)	(B=E00111)									
14	2	24311-000070	O-RING, 1AP7.0	3	3					W	
	(A=E00106)	(B=E00111)									
15	2	24341-000500	O-RING, 1AS50.0	1	1					W	
	(A=E00106)	(B=E00111)									
16	2	26106-080202	BOLT, M8X 20 PLATED	2	2					W	
	(A=E00106)	(B=E00111)									
17	1	24311-000120	O-RING, 1AP12.0	3	3					W	
	(A=E00106)	(B=E00111)									

Remarks
* This item is applicable to [(A)(B)=June, 2003] or following machines [Refer to Fig.58(7A), 62(12A)].

N:Old ◄Yes/No► New, Q:Old ◄No/Yes► New, R:Old ◄Yes/Yes► New, S:Old ◄No/No► New, W:Add, Z:Discontinued, F:Interchangeable by set, K:Q'ty Change

Copyright (C) 2014 YANMAR CO., LTD. All RightsReserved.

Fig.13. SUCTION MANIFOLD

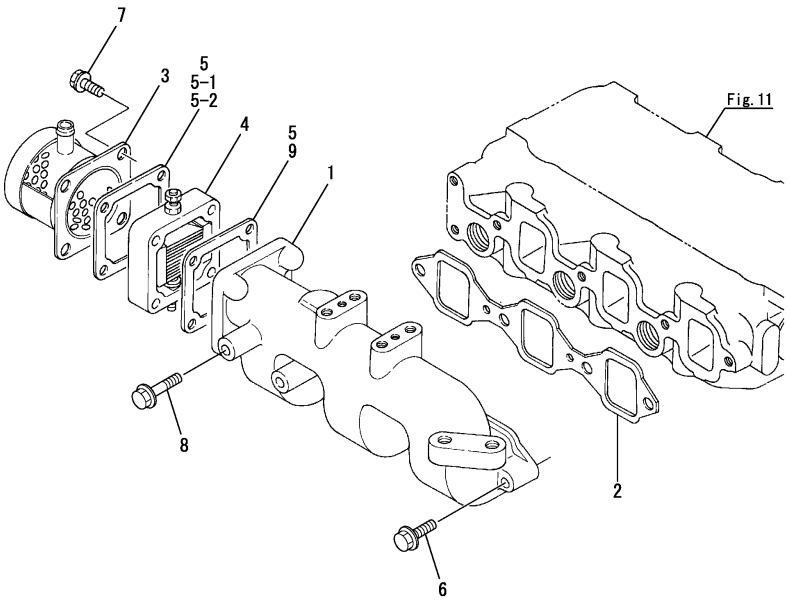

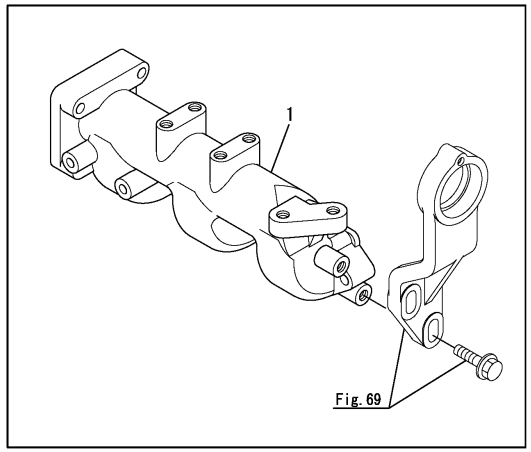

(A)=3JH25A (D)=
(B)=3JH30A (E)=
(C)= (F)=

No.	Lev.	Parts No.	Description	Q'ty (A)	(B)	(C)	(D)	(E)	(F)	I	R
1	1	129170-12100	MANIFOLD, AIR INTAKE	1	1						1
2	1	129150-12110	GASKET, MANIFOLD	1	1						
2-1	1	129150-12111	GASKET, MANIFOLD	1	1					N	
	(A=*1990.08)	(B=*1990.08)									
3	1	129198-12550	SCREEN	1	1						
4	1	129100-77500	HEATER, AIR 11V	1	1						
4-1	1	129100-77501	HEATER, AIR 11V	1	1					R	
	(A=E03303)	(B=E03303)									
5	1	129150-77510	GASKET	2	2						
5-1	1	129150-77510	GASKET	1	1					K	
	(A=*1987.02)	(B=*1987.02)									
5-2	1	129150-77511	GASKET, AIR HEATER	1	1					N	
	(A=*1990.08)	(B=*1990.08)									
6	1	26106-080252	BOLT, M8X 25 PLATED	3	3						
7	1	26106-080302	BOLT, M8X 30 PLATED	4	4						
8	1	26106-080352	BOLT, M8X 35 PLATED	1	1						
9	1	129100-77510	GASKET, AIR HEATER	1	1					W	
	(A=*1987.02)	(B=*1987.02)									

Remarks
(1)Shape changed (Parts number not changed).

N:Old $\overset{\text{Yes}}{\underset{\text{No}}{\leftrightarrow}}$ New, Q:Old $\overset{\text{No}}{\underset{\text{Yes}}{\leftrightarrow}}$ New, R:Old $\overset{\text{Yes}}{\underset{\text{Yes}}{\leftrightarrow}}$ New, S:Old $\overset{\text{No}}{\underset{\text{No}}{\leftrightarrow}}$ New, W:Add, Z:Discontinued, F:Interchangeable by set, K:Q'ty Change

Copyright (C) 2014 YANMAR CO., LTD. All RightsReserved.

Fig.14. MIXING ELBOW

.

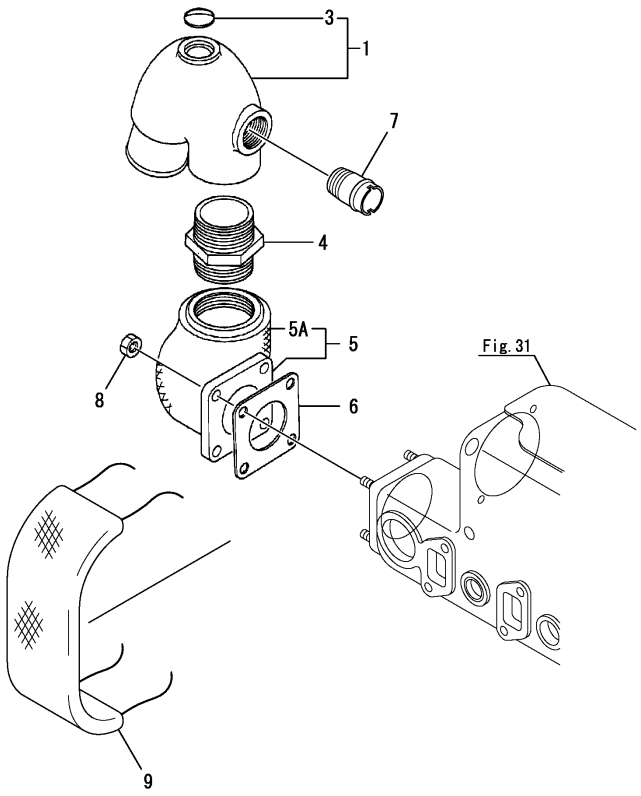

(A)=3JH25A (D)=
(B)=3JH30A (E)=
(C)= (F)=

No.	Lev.	Parts No.	Description	Q'ty (A)	(B)	(C)	(D)	(E)	(F)	I	R
1	1	129198-13500	ELBOW	1	1						
3	2	27233-250000	PLUG, 25	1	1						
4	1	104214-13580	JOINT	1	1						
5	1	129198-13600	BEND ASSY, EXHAUST	1	1						
5-1	1	129198-13650	BEND ASSY, EXHAUST	1	1					N	
	(A=*1988.07)	(B=*1988.07)									
5A	2	129198-13660	INSULATOR	1	1						
6	1	129792-18090	GASKET	1	1						
6-1	1	129472-18090	GASKET	1	1					N	
	(A=*1988.07)	(B=*1988.07)									
7	1	124160-49480	JOINT, PIPE	1	1						
8	1	26703-080002	NUT, M8	4	4						
9	1	129198-13680	INSULATOR, EXH.BEND	1	1					W	
	(A=E08549)	(B=E08549)									

N:Old $\overset{\text{Yes}}{\underset{\text{No}}{\leftrightarrow}}$ New, Q:Old $\overset{\text{No}}{\underset{\text{Yes}}{\leftrightarrow}}$ New, R:Old $\overset{\text{Yes}}{\underset{\text{Yes}}{\leftrightarrow}}$ New, S:Old $\overset{\text{No}}{\underset{\text{No}}{\leftrightarrow}}$ New, W:Add, Z:Discontinued, F:Interchangeable by set, K:Q'ty Change

Copyright (C) 2014 YANMAR CO., LTD. All RightsReserved.

Fig.15. CAMSHAFT

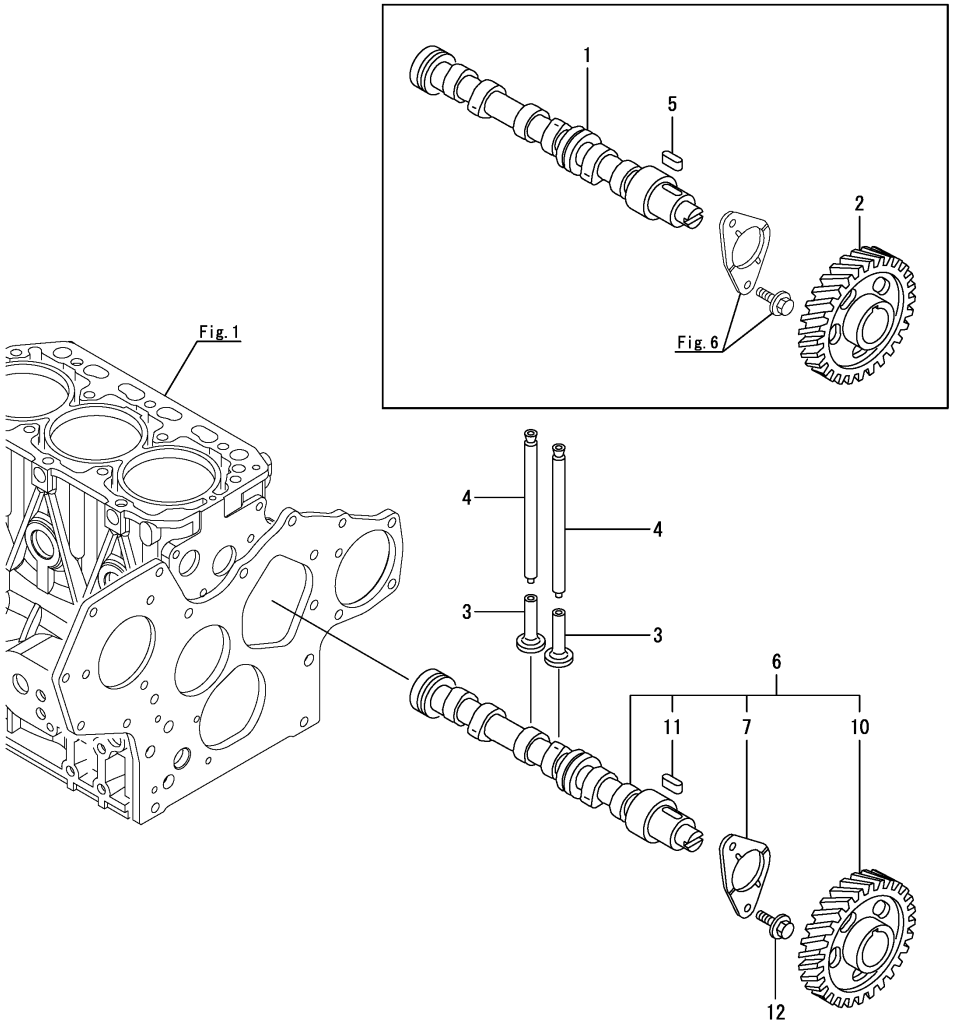

(A)=3JH25A (D)=
(B)=3JH30A (E)=
(C)= (F)=

No.	Lev.	Parts No.	Description	Q'ty (A)	(B)	(C)	(D)	(E)	(F)	I	R
1	1	129150-14011	CAMSHAFT	1	1					Z	
	(A=E00106)	(B=E00111)									
2	1	129150-14101	GEAR, CAMSHAFT	1	1					Z	
	(A=E00106)	(B=E00111)									
3	1	129150-14200	TAPPET	6	6						
4	1	129150-14400	PUSH-ROD, L=178	6	6						
5	1	22512-070140	KEY, 7X 14	1	1					Z	
	(A=E00106)	(B=E00111)									
6	1	129129-14580	CAMSHAFT ASSY	1	1					W	
	(A=E00106)	(B=E00111)									
7	2	129150-02450	BEARING, THRUST	1	1					W	
	(A=E00106)	(B=E00111)									
10	2	129150-14101	GEAR, CAMSHAFT	1	1					W	
	(A=E00106)	(B=E00111)									
11	2	22512-070140	KEY, 7X 14	1	1					W	
	(A=E00106)	(B=E00111)									
12	1	26106-080142	BOLT, M8X 14 PLATED	2	2					W	
	(A=E00106)	(B=E00111)									

N:Old $\xleftrightarrow[\text{No}]{\text{Yes}}$ New, Q:Old $\xleftrightarrow[\text{Yes}]{\text{No}}$ New, R:Old $\xleftrightarrow[\text{Yes}]{\text{Yes}}$ New, S:Old $\xleftrightarrow[\text{No}]{\text{No}}$ New, W:Add, Z:Discontinued, F:Interchangeable by set, K:Q'ty Change

Copyright (C) 2014 YANMAR CO., LTD. All RightsReserved.

Fig.16. CRANKSHAFT

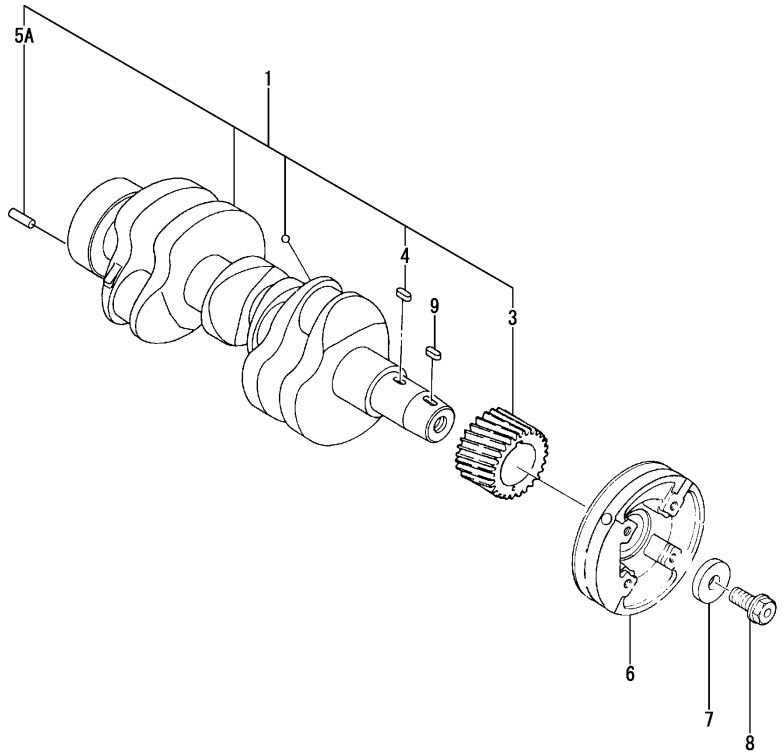

(A)=3JH25A (D)=
(B)=3JH30A (E)=
(C)= (F)=

No.	Lev.	Parts No.	Description	Q'ty (A)	(B)	(C)	(D)	(E)	(F)	I	R
1	1	129170-21001	CRANKSHAFT ASSY	1	1						
3	2	129150-21200	GEAR, CRANKSHAFT	1	1						
4	2	22512-070140	KEY, 7X 14	1	1						
5A	2	129100-01580	PIN, PARALLEL 8X16	1	1					W	
	(A=E00106)	(B=E00111)									
6	1	129170-21650	V-PULLEY, S45C	1	1						
7	1	129795-21661	WASHER	1	1						
8	1	121850-21680	BOLT	1	1						
9	1	22512-070160	KEY, 7X 16	1	1						

N:Old $\overset{\text{Yes}}{\underset{\text{No}}{\leftrightarrows}}$ New, Q:Old $\overset{\text{No}}{\underset{\text{Yes}}{\leftrightarrows}}$ New, R:Old $\overset{\text{Yes}}{\underset{\text{Yes}}{\leftrightarrows}}$ New, S:Old $\overset{\text{No}}{\underset{\text{No}}{\leftrightarrows}}$ New, W:Add, Z:Discontinued, F:Interchangeable by set, K:Q'ty Change

Copyright (C) 2014 YANMAR CO., LTD. All RightsReserved.

Fig.17. FLYWHEEL

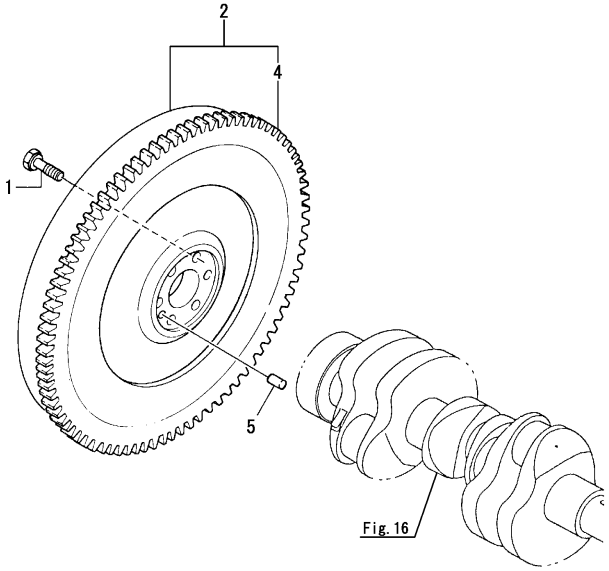

(A)=3JH25A (D)=
(B)=3JH30A (E)=
(C)= (F)=

No.	Lev.	Parts No.	Description	Q'ty (A)	(B)	(C)	(D)	(E)	(F)	I	R
1	1	121111-21501	BOLT, FLYWHEEL	6	6						
2	1	129170-21590	FLYWHEEL ASSY	1	1						
4	2	124550-21600	GEAR, RING Z=127	1	1						
5	1	22312-080160	PIN, PARALLEL M8X16	1	1						
5-1	1	129100-01580	PIN, PARALLEL 8X16	1	1					R	
	(A=*1997.07)	(B=*1997.07)									
5-2	1	129100-01580	PIN, PARALLEL 8X16	1	1					Z	1
	(A=E00106)	(B=E00111)									

Remarks
(1)Refer to Fig.16

N:Old $\xleftrightarrow[\text{No}]{\text{Yes}}$ New, Q:Old $\xleftrightarrow[\text{Yes}]{\text{No}}$ New, R:Old $\xleftrightarrow[\text{Yes}]{\text{Yes}}$ New, S:Old $\xleftrightarrow[\text{No}]{\text{No}}$ New, W:Add, Z:Discontinued, F:Interchangeable by set, K:Q'ty Change

Copyright (C) 2014 YANMAR CO., LTD. All RightsReserved.

Fig.63. (17A)FLYWHEEL(WITH HAND STARTING SPEC)(OPTIONAL)

(A)=3JH25A
(B)=3JH30A
(C)=
(D)=
(E)=
(F)=

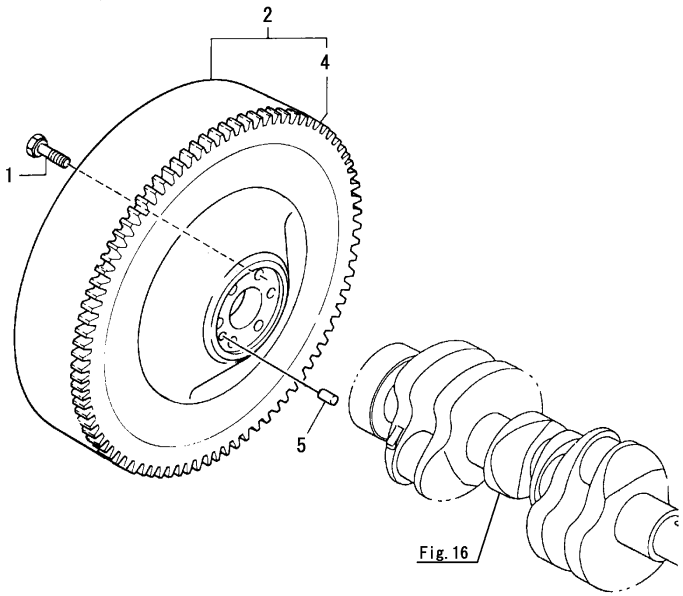

No.	Lev.	Parts No.	Description	Q'ty (A)	(B)	(C)	(D)	(E)	(F)	I	R
1	1	121111-21501	BOLT, FLYWHEEL	6	6						
2	1	129198-21590	FLYWHEEL ASSY	1	1						
4	2	124550-21600	GEAR, RING Z=127	1	1						
5	1	22312-080160	PIN, PARALLEL M8X16	1	1						

N:Old $\overset{\text{Yes}}{\underset{\text{No}}{\leftrightarrows}}$ New, Q:Old $\overset{\text{No}}{\underset{\text{Yes}}{\leftrightarrows}}$ New, R:Old $\overset{\text{Yes}}{\underset{\text{Yes}}{\leftrightarrows}}$ New, S:Old $\overset{\text{No}}{\underset{\text{No}}{\leftrightarrows}}$ New, W:Add, Z:Discontinued, F:Interchangeable by set, K:Q'ty Change

Copyright (C) 2014 YANMAR CO., LTD. All RightsReserved.

Fig.18. PISTON

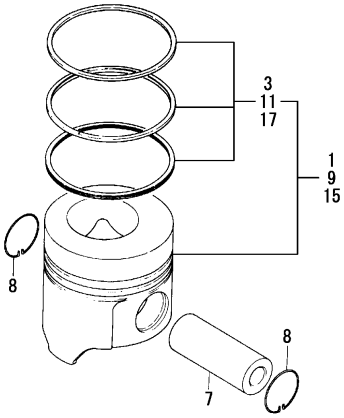

(A)=3JH25A (D)=
(B)=3JH30A (E)=
(C)= (F)=

No.	Lev.	Parts No.	Description	Q'ty (A)	(B)	(C)	(D)	(E)	(F)	I	R
1	1	129402-22090	PISTON ASSY	3	3						
3	2	729120-22500	RING SET, PISTON	3	3						
7	1	129150-22300	PIN, PISTON D26 L66	3	3						
8	1	121100-22400	CIRCLIP	6	6						
9	1	729402-22910	PISTON ASSY, 0.25 OS	3	3						1
11	2	729120-22540	RING SET, 0.25 OS	3	3						1
15	1	129402-22920	PISTON ASSY, 0.50 OS	3	3						2
17	2	129402-22970	RING SET, 0.50 OS	3	3						2

Remarks
(1)Over sized(O.S.=0.25)parts.
(1)Over sized(O.S.=0.50)parts.

N:Old $\xleftrightarrow[\text{No}]{\text{Yes}}$ New, Q:Old $\xleftrightarrow[\text{Yes}]{\text{No}}$ New, R:Old $\xleftrightarrow[\text{Yes}]{\text{Yes}}$ New, S:Old $\xleftrightarrow[\text{No}]{\text{No}}$ New, W:Add, Z:Discontinued, F:Interchangeable by set, K:Q'ty Change

Copyright (C) 2014 YANMAR CO., LTD. All RightsReserved.

Fig.19. CONNECTING ROD

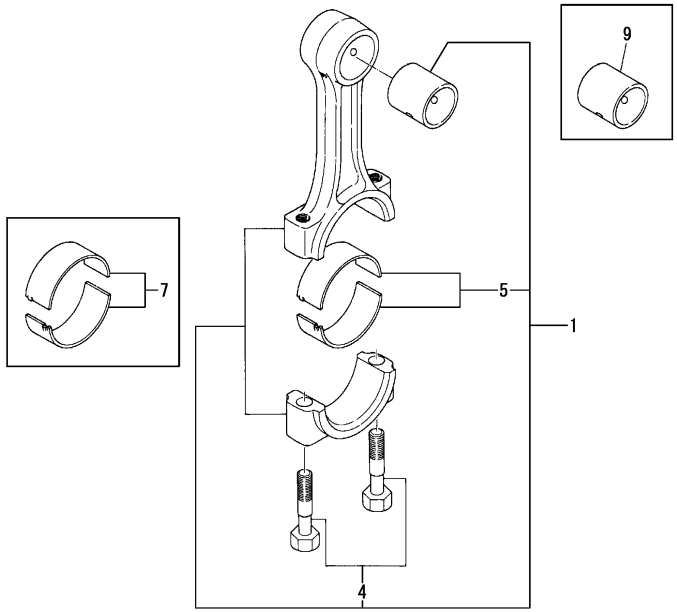

(A)=3JH25A (D)=
(B)=3JH30A (E)=
(C)= (F)=

No.	Lev.	Parts No.	Description	Q'ty (A)	(B)	(C)	(D)	(E)	(F)	I	R
1	1	729150-23701	ROD ASSY, CONNECTING	3	3						
1-1	1	129198-23100	ROD ASSY, CONNECTING	3	3					R	
	(A=*2002.12)	(B=*2002.12)									
4	2	121550-23200	BOLT, CONNECTING ROD	6	6						
5	2	129150-23600	BEARING, CRANK PIN	3	3						
5-1	2	129150-23601	BEARING, CRANK PIN	3	3					N	
	(A=E02597)	(B=E02890)									
7	1	129150-23610	BEARING, 0.25 US	3	3						1
7-1	1	129150-23611	BEARING, 0.25 US	3	3					R	1
	(A=E02597)	(B=E02890)									
9	1	129100-23910	BEARING, PISTON PIN	3	3						2

Remarks
(1)Under sized(U.S.=0.25)parts.
(2)Spare parts.

N:Old $\xleftrightarrow[\text{No}]{\text{Yes}}$ New, Q:Old $\xleftrightarrow[\text{Yes}]{\text{No}}$ New, R:Old $\xleftrightarrow[\text{Yes}]{\text{Yes}}$ New, S:Old $\xleftrightarrow[\text{No}]{\text{No}}$ New, W:Add, Z:Discontinued, F:Interchangeable by set, K:Q'ty Change

Copyright (C) 2014 YANMAR CO., LTD. All RightsReserved.

Fig.20. IDLE GEAR

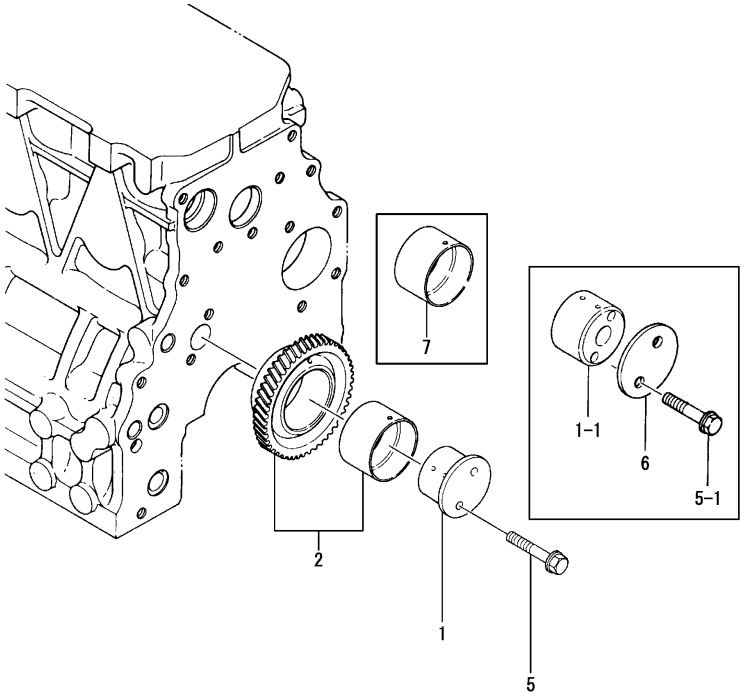

(A)=3JH25A (D)=
(B)=3JH30A (E)=
(C)= (F)=

No.	Lev.	Parts No.	Description	Q'ty (A)	(B)	(C)	(D)	(E)	(F)	I	R
1	1	129150-25051	SHAFT, IDLE	1	1						
1-1	1	129150-25052	SHAFT, IDLE	1	1					S	
	(A=*1986.12)	(B=*1986.12)									
2	1	129150-25101	GEAR ASSY, IDLE	1	1						
2-1	1	129573-25100	GEAR ASSY, IDLE	1	1					N	
	(A=*1989.07)	(B=*1989.07)									
5	1	26106-080452	BOLT, M8X 45 PLATED	2	2						
5-1	1	119174-25060	BOLT, M8X45	2	2					R	
	(A=E00106)	(B=E00111)									
6	1	129150-25020	RETAINER	1	1					W	
	(A=*1986.12)	(B=*1986.12)									
7	1	129573-25090	BUSH, IDLE GEAR	1	1					W	1
	(A=*1991.12)	(B=*1991.12)									

Remarks
(1)Spare parts.

N:Old ◄Yes/No► New, Q:Old ◄No/Yes► New, R:Old ◄Yes/Yes► New, S:Old ◄No/No► New, W:Add, Z:Discontinued, F:Interchangeable by set, K:Q'ty Change

Copyright (C) 2014 YANMAR CO., LTD. All RightsReserved.

Fig.21. FUEL FEED PUMP GEAR

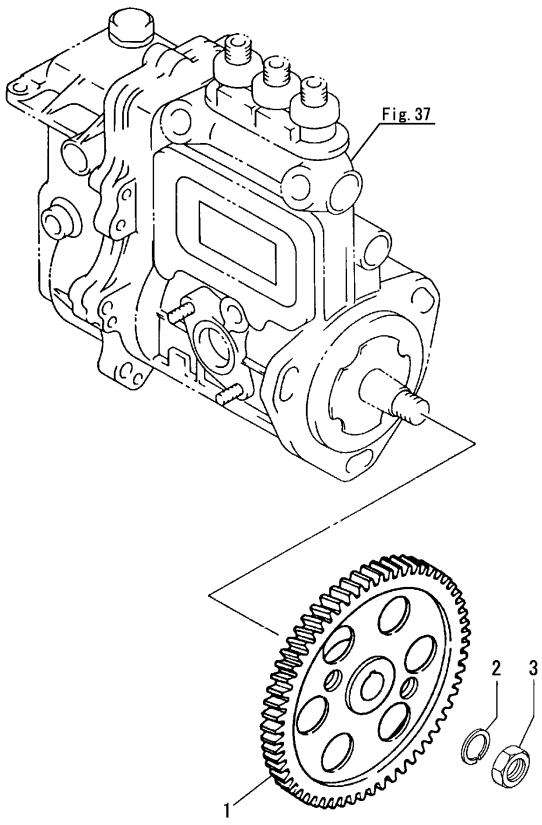

(A)=3JH25A
(B)=3JH30A
(C)=
(D)=
(E)=
(F)=

No.	Lev.	Parts No.	Description	Q'ty (A)	(B)	(C)	(D)	(E)	(F)	I	R
1	1	129100-25900	GEAR, PUMP	1	1						
2	1	22217-120000	WASHER, SPRING 12	1	1						
3	1	26716-120002	NUT, M12	1	1						

N:Old ◄Yes/No► New, Q:Old ◄No/Yes► New, R:Old ◄Yes/Yes► New, S:Old ◄No/No► New, W:Add, Z:Discontinued, F:Interchangeable by set, K:Q'ty Change

Copyright (C) 2014 YANMAR CO., LTD. All RightsReserved.

Fig.64. (21A)FUEL FEED PUMP GEAR(WITH HAND STARTING SPEC)(OPTIONAL)

(A)=3JH25A
(B)=3JH30A
(C)=
(D)=
(E)=
(F)=

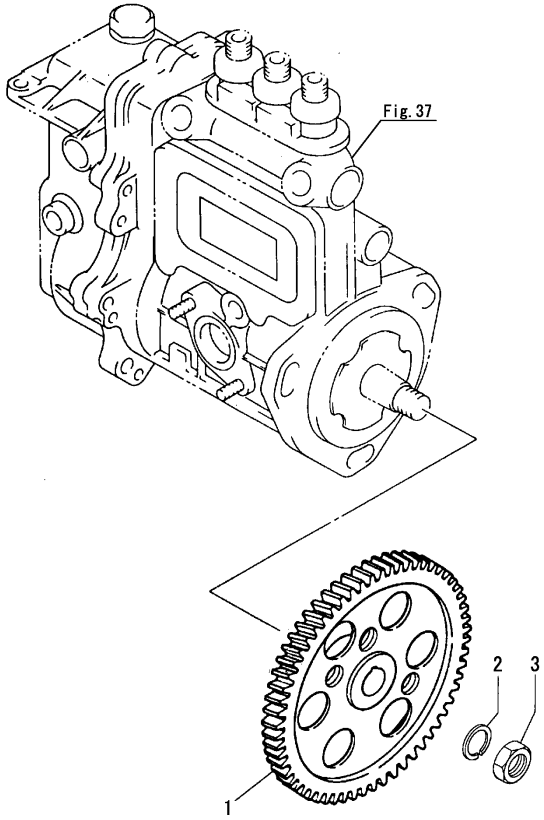

No.	Lev.	Parts No.	Description	Q'ty (A)	(B)	(C)	(D)	(E)	(F)	I	R
1	1	129198-25900	GEAR, PUMP	1	1						
2	1	22217-120000	WASHER, SPRING 12	1	1						
3	1	26716-120002	NUT, M12	1	1						

N:Old ◄Yes/No► New, Q:Old ◄No/Yes► New, R:Old ◄Yes/Yes► New, S:Old ◄No/No► New, W:Add, Z:Discontinued, F:Interchangeable by set, K:Q'ty Change

Copyright (C) 2014 YANMAR CO., LTD. All RightsReserved.

Fig.22. LUB. OIL PUMP

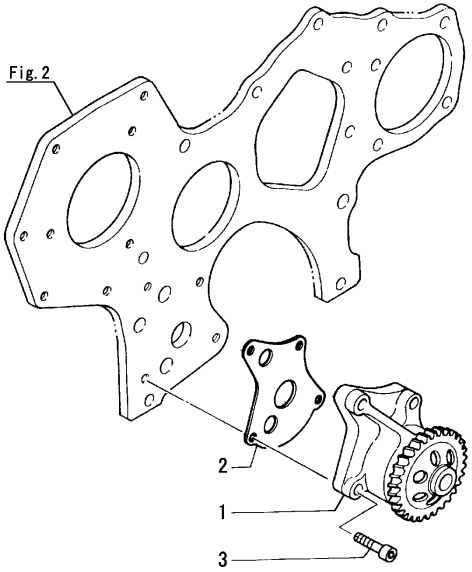

(A)=3JH25A (D)=
(B)=3JH30A (E)=
(C)= (F)=

No.	Lev.	Parts No.	Description	Q'ty (A)	(B)	(C)	(D)	(E)	(F)	I	R
1	1	119810-32000	PUMP ASSY, OIL	1	1						
2	1	129150-32020	GASKET, PUMP	1	1						
3	1	26450-060252	BOLT, M6X 25	4	4						

N:Old $\overset{\text{Yes}}{\underset{\text{No}}{\leftrightarrows}}$ New, Q:Old $\overset{\text{No}}{\underset{\text{Yes}}{\leftrightarrows}}$ New, R:Old $\overset{\text{Yes}}{\underset{\text{Yes}}{\leftrightarrows}}$ New, S:Old $\overset{\text{No}}{\underset{\text{No}}{\leftrightarrows}}$ New, W:Add, Z:Discontinued, F:Interchangeable by set, K:Q'ty Change

Copyright (C) 2014 YANMAR CO., LTD. All RightsReserved.

Fig.23. LUB. OIL DIPSTICK

(A)=3JH25A
(B)=3JH30A
(C)=
(D)=
(E)=
(F)=

No.	Lev.	Parts No.	Description	Q'ty (A)	(B)	(C)	(D)	(E)	(F)	I	R
1	1	129198-34860	GUIDE, DIPSTICK	1	1						
2	1	104214-39720	BOLT	1	1						
3	1	23414-160000	GASKET, 16X1.0	2	2						
4	1	26106-100162	BOLT, M10X 16 PLATED	1	1						
5	1	42130-501420	DIPSTICK, OIL	1	1						
5-1	1	129198-34800	DIPSTICK ASSY, OIL	1	1					N	
	(A=E08389)		(B=E08389)								

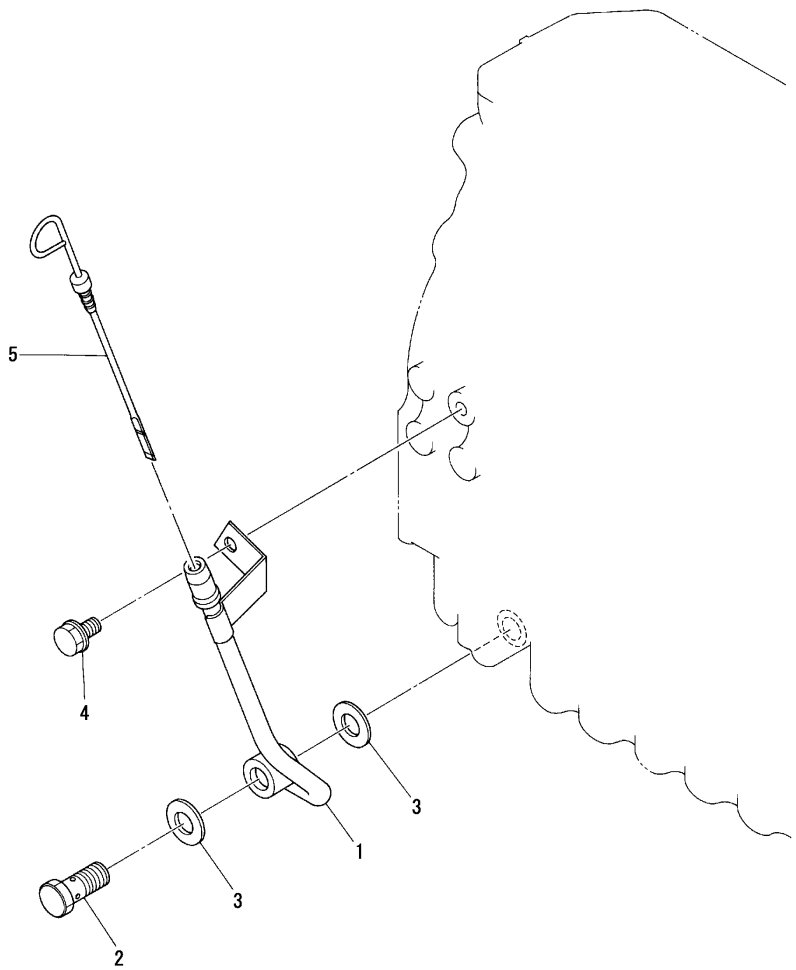

N:Old ◄Yes/No► New, Q:Old ◄No/Yes► New, R:Old ◄Yes/Yes► New, S:Old ◄No/No► New, W:Add, Z:Discontinued, F:Interchangeable by set, K:Q'ty Change

Copyright (C) 2014 YANMAR CO., LTD. All RightsReserved.

Fig.24. CHECK VALVE

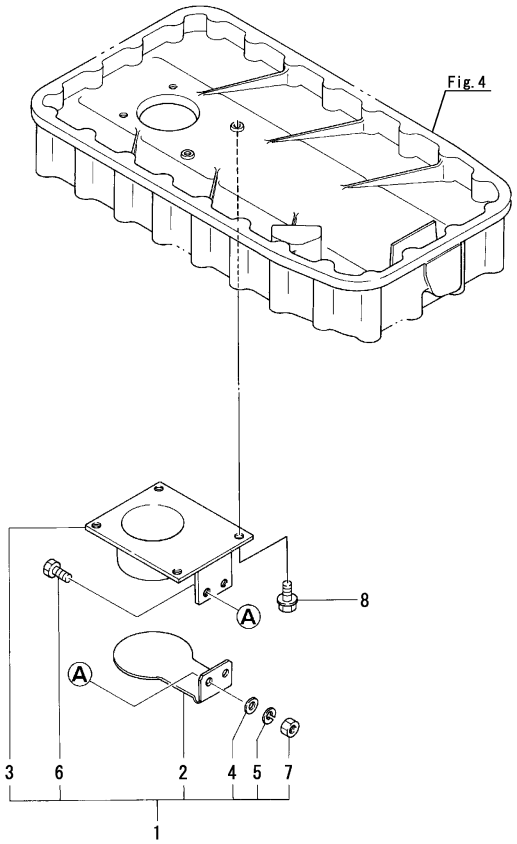

(A)=3JH25A
(B)=3JH30A
(C)=
(D)=
(E)=
(F)=

No.	Lev.	Parts No.	Description	Q'ty (A)	(B)	(C)	(D)	(E)	(F)	I	R
1	1	129198-34200	VALVE ASSY	1	1						
2	2	129198-34250	COVER	1	1						
3	2	129198-34300	STAY	1	1						
4	2	22131-050000	WASHER 5	2	2						
5	2	22212-050000	WASHER 5	2	2						
6	2	26116-050122	BOLT, M5X 12 PLATED	2	2						
7	2	26712-050002	NUT, M5	2	2						
8	1	26106-060122	BOLT, M6X 12 PLATED	4	4						

Remarks
* Change standard to parts of the Free Fall specification [Refer to Fig.87(76C)].

N:Old $\frac{\text{Yes}}{\text{No}}$ New, Q:Old $\frac{\text{No}}{\text{Yes}}$ New, R:Old $\frac{\text{Yes}}{\text{Yes}}$ New, S:Old $\frac{\text{No}}{\text{No}}$ New, W:Add, Z:Discontinued, F:Interchangeable by set, K:Q'ty Change

Copyright (C) 2014 YANMAR CO., LTD. All RightsReserved.

Fig.25. LUB. OIL SUCTION PIPE

(A)=3JH25A (D)=
(B)=3JH30A (E)=
(C)= (F)=

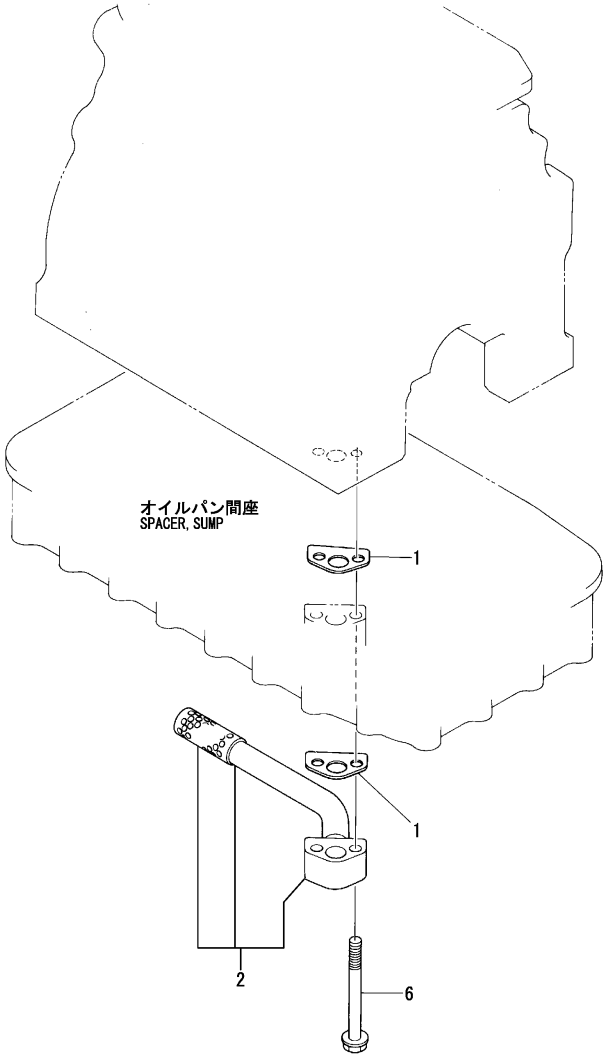

No.	Lev.	Parts No.	Description	Q'ty (A)	(B)	(C)	(D)	(E)	(F)	I	R
1	1	129150-35040	GASKET	2	2						
1-1	1	129150-35041	GASKET	1	1					K	
	(A=E00106)	(B=E00111)									
1-2	1	129150-35042	GASKET	1	1					N	
	(A=E00632)	(B=E00595)									
2	1	129198-35090	PIPE ASSY, OIL INLET	1	1						
6	1	26106-080852	BOLT, M8X 85 PLATED	2	2						

Remarks
* Change standard to parts of the Free Fall specification [Refer to Fig.87(76C)].

N:Old ◄Yes/No► New, Q:Old ◄No/Yes► New, R:Old ◄Yes/Yes► New, S:Old ◄No/No► New, W:Add, Z:Discontinued, F:Interchangeable by set, K:Q'ty Change

Copyright (C) 2014 YANMAR CO., LTD. All RightsReserved.

Fig.26. LUB. OIL STRAINER

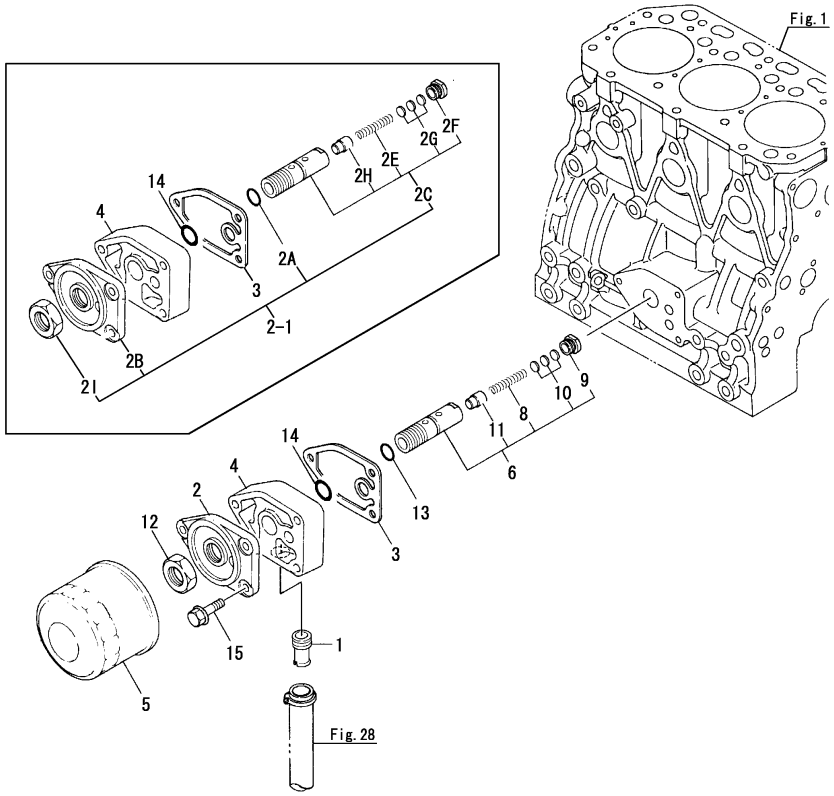

(A)=3JH25A (D)=
(B)=3JH30A (E)=
(C)= (F)=

No.	Lev.	Parts No.	Description	Q'ty (A)	(B)	(C)	(D)	(E)	(F)	I	R
1	1	121851-11970	JOINT, PIPE	1	1						
2	1	129150-35101	BRACKET, FILTER	1	1						
2-1	1	129198-35200	BRACKET ASSY, FILTER	1	1					R	
	(A=E00106)	(B=E00111)									
2A	2	119609-32040	O-RING, P16	1	1					W	
	(A=E00106)	(B=E00111)									
2B	2	129150-35101	BRACKET, FILTER	1	1					W	
	(A=E00106)	(B=E00111)									
2C	2	129198-35290	VALVE ASSY, CONTROL	1	1					W	
	(A=E00106)	(B=E00111)									
2E	3	119865-35320	SPRING	1	1					W	
	(A=E00106)	(B=E00111)									
2F	3	119865-35330	RETAINER	1	1					W	
	(A=E00106)	(B=E00111)									
2G	3	129150-35340	SHIM SET	1	1					W	
	(A=E00106)	(B=E00111)									
2H	3	119865-35350	VALVE, CONTROL	1	1					W	
	(A=E00106)	(B=E00111)									
2I	2	129150-35350	NUT	1	1					W	
	(A=E00106)	(B=E00111)									
3	1	129150-35110	GASKET	2	2						
3-1	1	129150-35111	GASKET	2	2					N	
	(A=E01564)	(B=E01557)									
4	1	129198-35120	SPACER	1	1						
5	1	129150-35150	FILTER 90X80L	1	1						1
5-1	1	129150-35151	FILTER, D80XL80	1	1					N	1
	(A=*1997.07)	(B=*1997.07)									
5-2	1	129150-35152	FILTER, D80XL80	1	1					N	1
	(A=E00341)	(B=E00331)									
5-3	1	129150-35153	FILTER ASSY, D80X80L	1	1					R	1
	(A=E02638)	(B=E02649)									
5-4	1	129150-35170	FILTER,LO	1	1					R	2
6	1	129198-35290	VALVE ASSY, CONTROL	1	1					Z	
	(A=E00106)	(B=E00111)									
8	2	119865-35320	SPRING	1	1					Z	
	(A=E00106)	(B=E00111)									
9	2	119865-35330	RETAINER	1	1					Z	
	(A=E00106)	(B=E00111)									
10	2	129150-35340	SHIM SET	1	1					Z	
	(A=E00106)	(B=E00111)									
11	2	119865-35350	VALVE, CONTROL	1	1					Z	
	(A=E00106)	(B=E00111)									
12	1	129150-35350	NUT	1	1					Z	
	(A=E00106)	(B=E00111)									
13	1	24311-000160	O-RING, 1AP16.0	1	1					Z	
	(A=E00106)	(B=E00111)									
14	1	24311-000200	O-RING, 1AP20.0	1	1						
15	1	26106-080502	BOLT, M8X 50 PLATED	3	3						

Remarks
(1)Non-branded filter(without Yanmar logo).
(2)Branded filter(with Yanmar logo).

N:Old $\xleftarrow[\text{No}]{\text{Yes}}$ New, Q:Old $\xleftarrow[\text{Yes}]{\text{No}}$ New, R:Old $\xleftarrow[\text{Yes}]{\text{Yes}}$ New, S:Old $\xleftarrow[\text{No}]{\text{No}}$ New, W:Add, Z:Discontinued, F:Interchangeable by set, K:Q'ty Change

Copyright (C) 2014 YANMAR CO., LTD. All RightsReserved.

Fig.27. OIL SUPPLY/WASTE PUMP

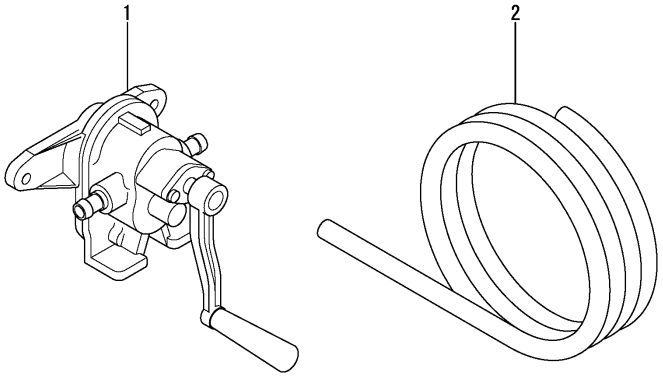

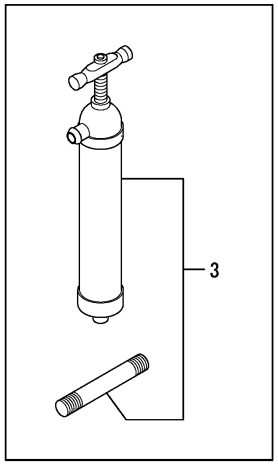

(A)=3JH25A (D)=
(B)=3JH30A (E)=
(C)= (F)=

No.	Lev.	Parts No.	Description	Q'ty (A)	(B)	(C)	(D)	(E)	(F)	I	R
1	1	124413-39100	PUMP ASSY, WASTE	1	1					Z	
	(A=E00101)	(B=E00101)									
2	1	43720-001220	PIPE	1	1					Z	
	(A=E00101)	(B=E00101)									
3	1	128275-39700	PUMP ASSY, WASTE	1	1					W	
	(A=E00101)	(B=E00101)									

N:Old $\xleftrightarrow[\text{No}]{\text{Yes}}$ New, Q:Old $\xleftrightarrow[\text{Yes}]{\text{No}}$ New, R:Old $\xleftrightarrow[\text{Yes}]{\text{Yes}}$ New, S:Old $\xleftrightarrow[\text{No}]{\text{No}}$ New, W:Add, Z:Discontinued, F:Interchangeable by set, K:Q'ty Change

Copyright (C) 2014 YANMAR CO., LTD. All RightsReserved.

Fig.28. LUB. OIL PIPE

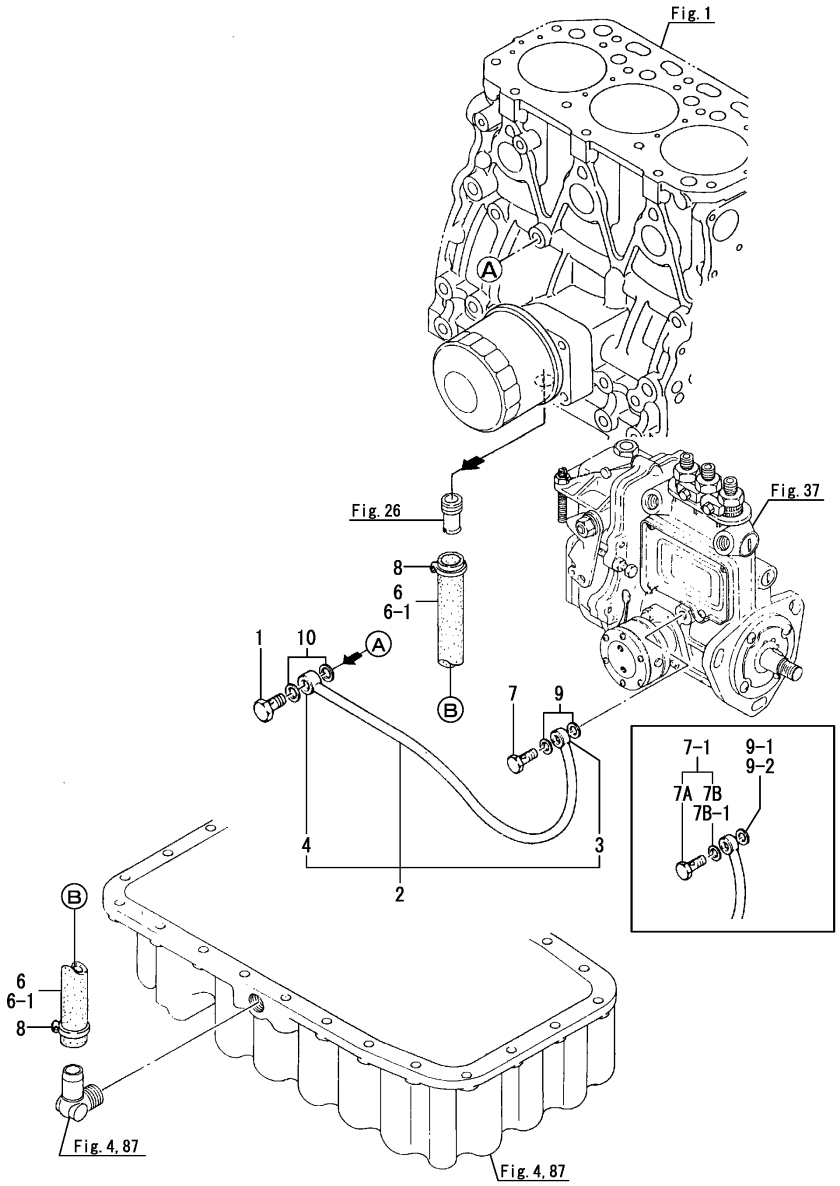

(A)=3JH25A (D)=
(B)=3JH30A (E)=
(C)= (F)=

No.	Lev.	Parts No.	Description	Q'ty (A)	(B)	(C)	(D)	(E)	(F)	I	R
1	1	124160-39140	BOLT, PIPE JOINT M10	1	1						
2	1	129150-39450	PIPE ASSY, OIL	1	1						
3	2	129150-39150	JOINT, BALL	1	1						
4	2	129150-39180	JOINT, BALL	1	1						
6	1	129474-49300	PIPE, WATER	1	1						
6-1	1	129198-39610	PIPE, OIL	1	1					N	
	(A=E00723)	(B=E00439)									
7	1	124550-59820	BOLT, PIPE JOINT M8	1	1						
7-1	1	124550-59830	BOLT ASSY, JOINT M8	1	1					R	
	(A=*1998.12)	(B=*1998.12)									
7A	2	124550-59820	BOLT, PIPE JOINT M8	1	1						
7B	2	23414-080000	GASKET, 8X1.0	1	1					W	
	(A=*1998.12)	(B=*1998.12)									
7B-1	2	22190-080002	WASHER, SEAL 8	1	1					N	
	(A=*1999.10)	(B=*1999.10)									
8	1	23000-019000	CLAMP, 19	2	2						
9	1	23414-080000	GASKET, 8X1.0	2	2						
9-1	1	23414-080000	GASKET, 8X1.0	1	1					K	
	(A=*1998.12)	(B=*1998.12)									
9-2	1	22190-080002	WASHER, SEAL 8	1	1					N	
	(A=*1999.10)	(B=*1999.10)									
10	1	23414-100000	GASKET, 10X1.0	2	2						
10-1	1	22190-100002	WASHER, SEAL 10	2	2					N	
	(A=*1999.10)	(B=*1999.10)									

N:Old $\overset{\text{Yes}}{\underset{\text{No}}{\leftrightarrow}}$ New, Q:Old $\overset{\text{No}}{\underset{\text{Yes}}{\leftrightarrow}}$ New, R:Old $\overset{\text{Yes}}{\underset{\text{Yes}}{\leftrightarrow}}$ New, S:Old $\overset{\text{No}}{\underset{\text{No}}{\leftrightarrow}}$ New, W:Add, Z:Discontinued, F:Interchangeable by set, K:Q'ty Change

Copyright (C) 2014 YANMAR CO., LTD. All RightsReserved.

Fig.29. COOLING SEA WATER PUMP

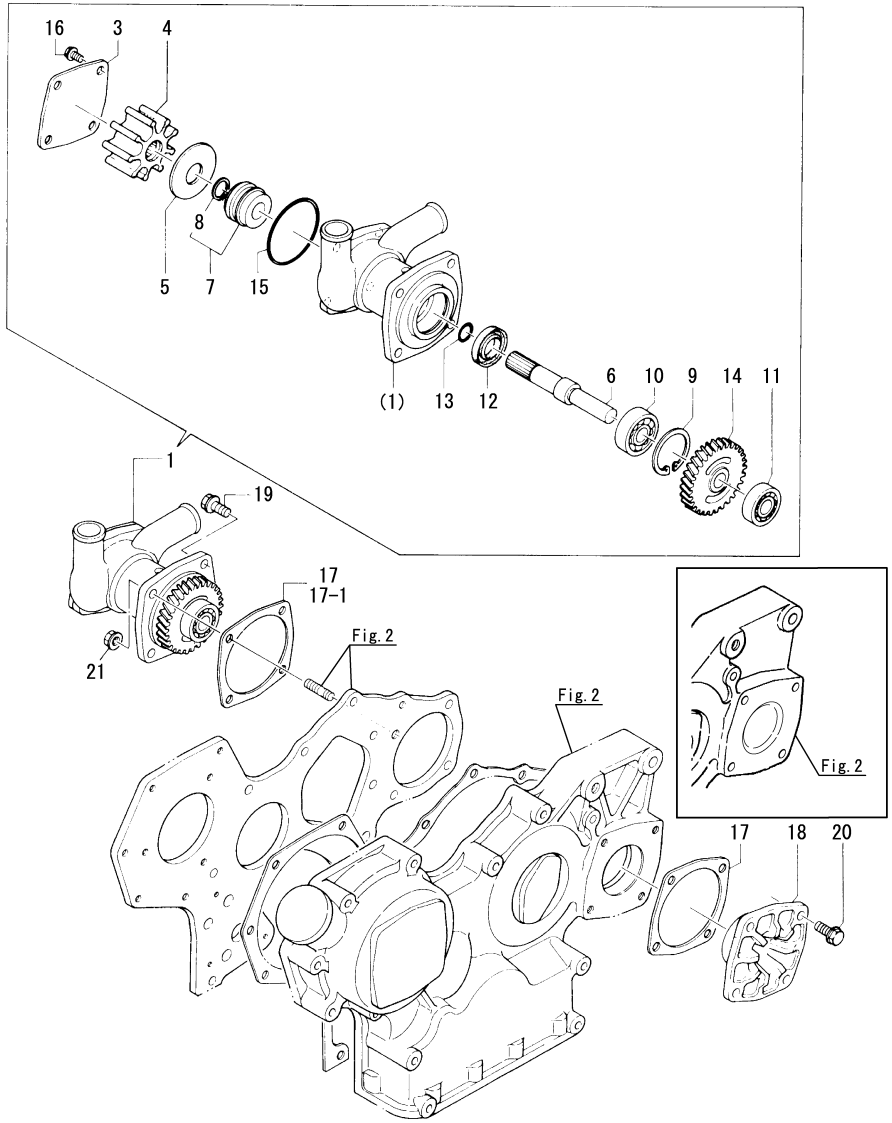

(A)=3JH25A (D)=
(B)=3JH30A (E)=
(C)= (F)=

No.	Lev.	Parts No.	Description	Q'ty (A)	(B)	(C)	(D)	(E)	(F)	I	R
1	1	129198-42500	PUMP ASSY, WATER	1	1						
1-1	1	129198-42501	PUMP ASSY, WATER	1	1					N	
	(A=*2000.10.)	(B=*2000.10.)									
1-2	1	129198-42502	PUMP ASSY, WATER	1	1					N	
	(A=E02746)	(B=E02746)									
3	2	129198-42540	COVER	1	1						
4	2	129470-42530	IMPELLER	1	1						
4-1	2	129470-42531	IMPELLER	1	1					N	
	(A=*2000.10.)	(B=*2000.10.)									
4-2	2	129470-42532	IMPELLER	1	1					N	
	(A=E06780)	(B=E06780)									
5	2	129198-42520	PLATE	1	1						
6	2	129470-42550	SHAFT	1	1						
7	2	129795-42670	SEAL	1	1						
8	3	145410-46190	CIRCLIP	1	1						
9	2	22252-000420	RING, 42	1	1						
10	2	24101-063024	BEARING, BALL 6302	1	1						
11	2	24101-062024	BEARING, BALL 6202	1	1						
12	2	24421-203508	SEAL, OIL TC203508	1	1						
13	2	24311-000150	O-RING, 1AP15.0	1	1						
14	2	129470-42700	GEAR	1	1						
15	2	24341-000600	O-RING, 1AS60.0	1	1						
16	2	26203-060102	BOLT, M6X 10 PLATED	4	4						
17	1	129150-01880	GASKET	2	2						
17-1	1	129150-01881	GASKET	1	1					R	
	(A=*1990.08.)	(B=*1990.08.)									
18	1	129470-42800	RETAINER	1	1					Z	
	(A=*1987.10.)	(B=*1987.10.)									
19	1	26106-080162	BOLT, M8X 16 PLATED	3	3						
20	1	26106-080202	BOLT, M8X 20 PLATED	4	4					Z	
	(A=*1987.10.)	(B=*1987.10.)									
21	1	26366-080002	NUT, M8	1	1						
21-1	1	26306-080002	NUT, M8	1	1					R	
	(A=*2001.04.)	(B=*2001.04.)									

N:Old $\xleftrightarrow[\text{No}]{\text{Yes}}$ New, Q:Old $\xleftrightarrow[\text{Yes}]{\text{No}}$ New, R:Old $\xleftrightarrow[\text{Yes}]{\text{Yes}}$ New, S:Old $\xleftrightarrow[\text{No}]{\text{No}}$ New, W:Add, Z:Discontinued, F:Interchangeable by set, K:Q'ty Change

Copyright (C) 2014 YANMAR CO., LTD. All RightsReserved.

Fig.30. COOLING FRESH WATER PUMP

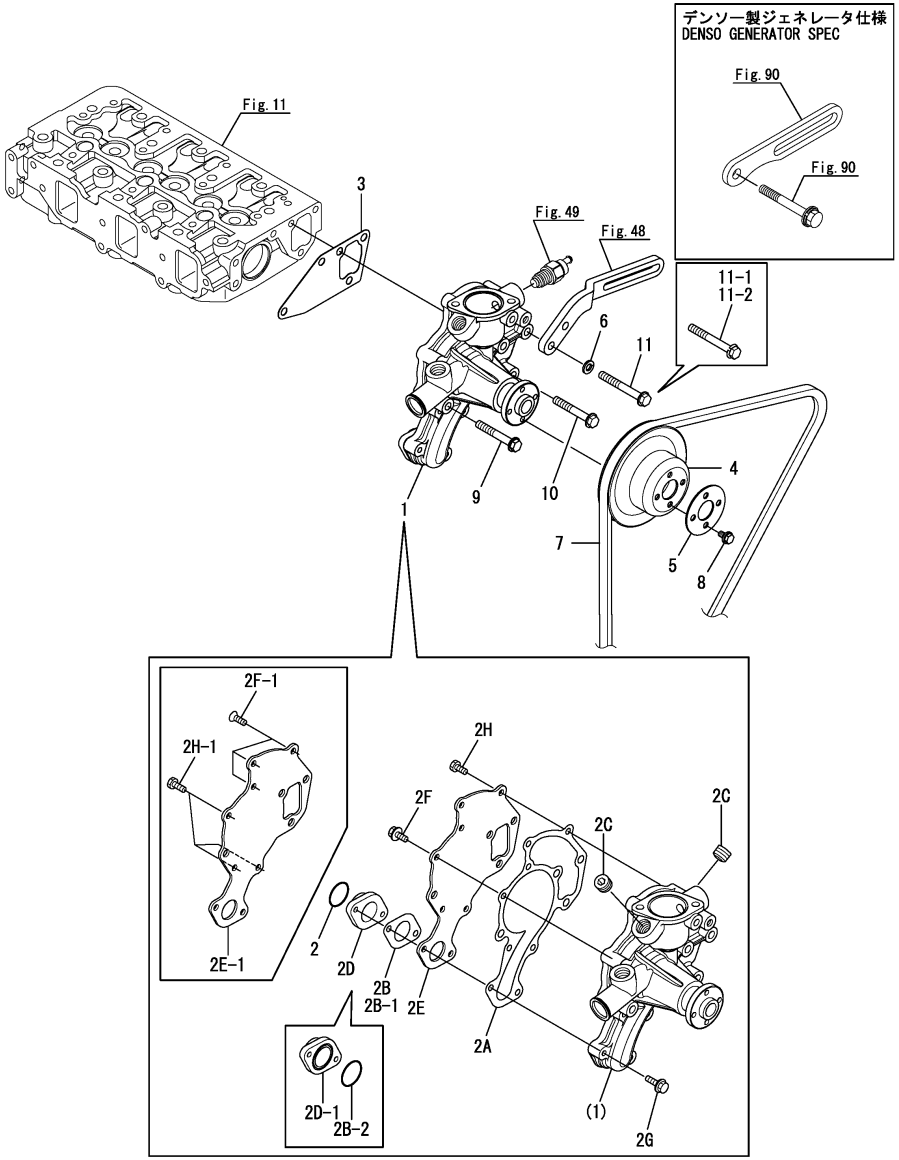

(A)=3JH25A (D)=
(B)=3JH30A (E)=
(C)= (F)=

No.	Lev.	Parts No.	Description	Q'ty (A)	(B)	(C)	(D)	(E)	(F)	I	R
1	1	129470-42000	PUMP ASSY, WATER	1	1						
1-1	1	129470-42001	PUMP ASSY, WATER	1	1					N	
	(A=*1990.08)	(B=*1990.08)									
1-2	1	129470-42002	PUMP ASSY, WATER	1	1					R	
	(A=*2001.11)	(B=*2001.11)									
1-3	1	129470-42003	PUMP ASSY, WATER	1	1					N	
	(A=E01410)	(B=E01370)									
2	2	129150-42320	O-RING	1	1						
2-1	2	129054-42320	O-RING	1	1					N	
	(A=*2001.11)	(B=*2001.11)									
2A	2	129052-42050	GASKET	1	1						
2A-1	2	129150-42059	GASKET	1	1					R	
	(A=E01410)	(B=E01370)									
2B	2	129052-42310	GASKET	1	1						
2B-1	2	129150-42319	GASKET, FLANGE	1	1					R	
	(A=E01410)	(B=E01370)									
2B-2	2	24358-240310	O-RING, 524031	1	1					S	3
	(A=E02688)	(B=E02692)									
2C	2	23875-030000	PLUG, R03	3	3						
2C-1	2	129916-49740	PLUG, R3/8	3	3					R	
	(A=E01410)	(B=E01370)									
2D	2	129150-42300	FLANGE	1	1						
2D-1	2	129150-42301	FLANGE	1	1					S	3
	(A=E02688)	(B=E02692)									
2E	2	129150-42129	PLATE, PUMP	1	1						
2E-1	2	129263-42120	PLATE, PUMP	1	1					S	
	(A=E01410)	(B=E01370)									
2F	2	26106-060142	BOLT, M6X 14 PLATED	5	5						
2F-1	2	26577-060142	SCREW M 6X 14	3	3					S	
	(A=E01410)	(B=E01370)									
2G	2	26106-060202	BOLT, M6X 20 PLATED	2	2						
2H	2	26116-060162	BOLT, M6X 16 PLATED	1	1						
2H-1	2	26116-060162	BOLT, M6X 16 PLATED	3	3					K	
	(A=E01410)	(B=E01370)									
3	1	129150-42020	GASKET, WATER PUMP	1	1						
3-1	1	129486-42050	GASKET, WATER PUMP	1	1					N	
	(A=*2000.03)	(B=*2000.03)									
4	1	129550-42350	V-PULLEY, D=120	1	1						
5	1	129156-44760	WASHER	1	1						
6	1	22217-080000	WASHER, SPRING 8	1	1					Z	
	(A=*2004.10)	(B=*2004.10)									
7	1	25132-004500	V-BELT, A45	1	1						1
7-1	1	25152-004400	V-BELT, A44	1	1					S	2
	(A=E08567)	(B=E08562)									
8	1	26106-060102	BOLT, M6X 10 PLATED	4	4						
9	1	26106-080552	BOLT, M8X 55 PLATED	2	2						
10	1	26106-080602	BOLT, M8X 60 PLATED	1	1						
10-1	1	26106-080552	BOLT, M8X 55 PLATED	1	1					N	
	(A=E08567)	(B=E08562)									
11	1	26106-080652	BOLT, M8X 65 PLATED	1	1						
11-1	1	26013-080652	BOLT, SPRING M8X 65	1	1					R	

N:Old $\frac{\text{Yes}}{\text{No}}$ New, Q:Old $\frac{\text{No}}{\text{Yes}}$ New, R:Old $\frac{\text{Yes}}{\text{Yes}}$ New, S:Old $\frac{\text{No}}{\text{No}}$ New, W:Add, Z:Discontinued, F:Interchangeable by set, K:Q'ty Change

Remarks
(1)HITACHI generator spec
(2)DENSO generator spec
(3)Interchangeable by simultaneous replacement with No.2B-2, 2D-1.

++ CONTINUE ++

Copyright (C) 2014 YANMAR CO., LTD. All RightsReserved.

Fig.30. COOLING FRESH WATER PUMP

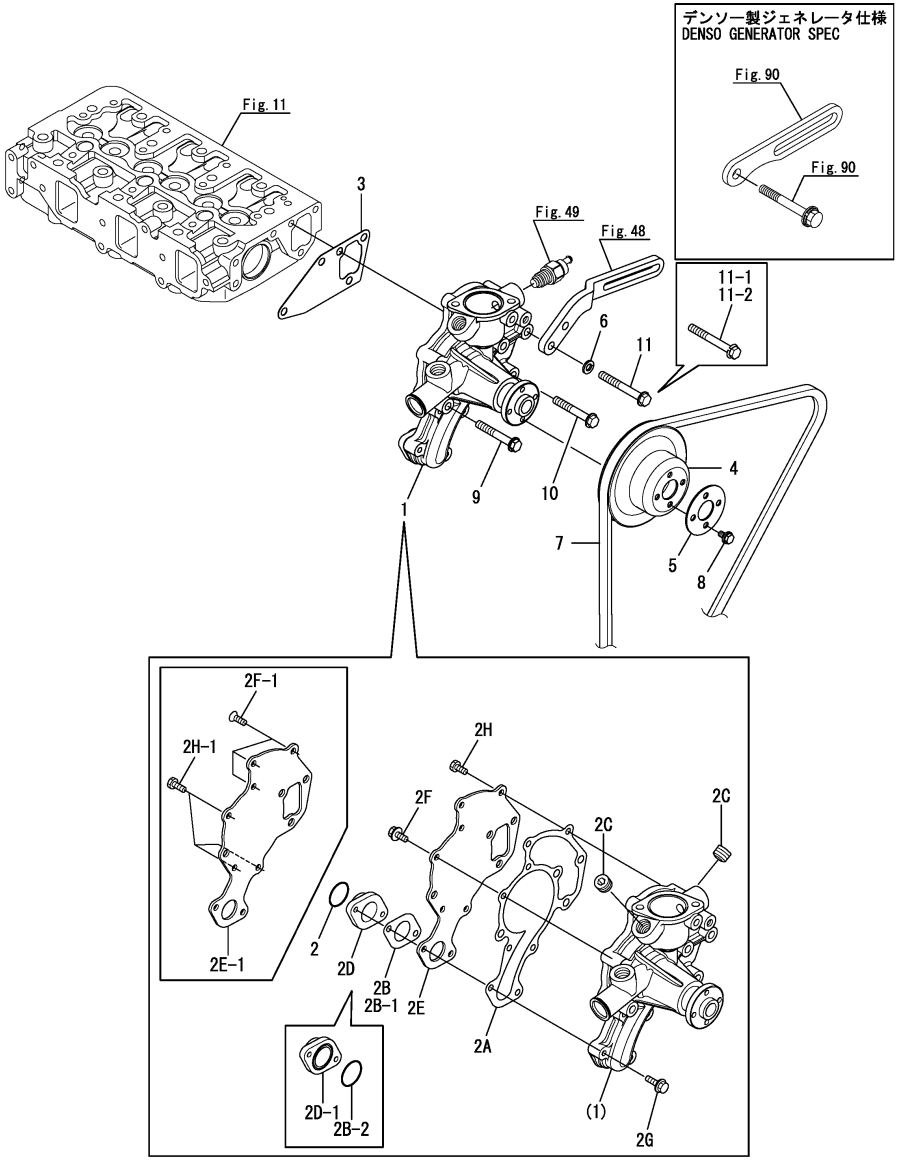

(A)=3JH25A
(B)=3JH30A
(C)=
(D)=
(E)=
(F)=

No.	Lev.	Parts No.	Description	Q'ty (A)	(B)	(C)	(D)	(E)	(F)	I	R
11-2	(A=*2004.10) 1 (A=E08567)	(B=*2004.10) 26013-080652 (B=E08562)	BOLT, SPRING M8X 65	1	1					Z	

Remarks
(1)HITACHI generator spec
(2)DENSO generator spec
(3)Interchangeable by simultaneous replacement with No.2B-2, 2D-1.

N:Old ←Yes/No→ New, Q:Old ←No/Yes→ New, R:Old ←Yes/Yes→ New, S:Old ←No/No→ New, W:Add, Z:Discontinued, F:Interchangeable by set, K:Q'ty Change

Copyright (C) 2014 YANMAR CO., LTD. All RightsReserved.

Fig.31. FRESH WATER COOLER

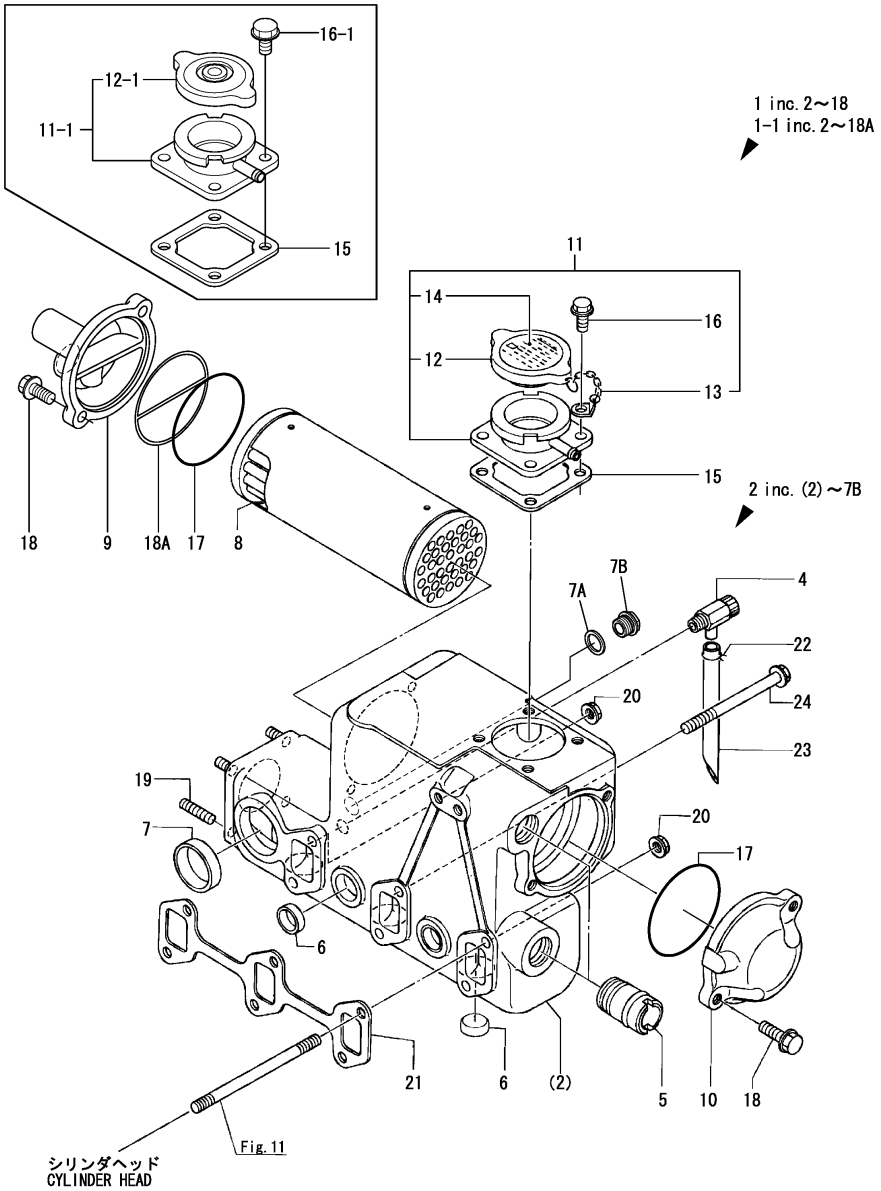

(A)=3JH25A (D)=
(B)=3JH30A (E)=
(C)= (F)=

No.	Lev.	Parts No.	Description	Q'ty (A)	(B)	(C)	(D)	(E)	(F)	I	R
1	1	729170-44500	COOLER ASSY, WATER	1	1						
1-1	1	129170-44900	COOLER ASSY, WATER	1	1					N	
(A=FROM 1ST)		(B=FROM 1ST)									
2	2	129170-44000	COOLER ASSY, WATER	1	1						
4	3	120130-49350	COCK, 1/4	1	1						
4-1	3	119620-49290	COCK ASSY, 1/4	1	1					N	
(A=*2000.04)		(B=*2000.04)									
5	3	124160-49480	JOINT, PIPE	2	2						
6	3	27241-280000	PLUG, 28	7	7						
7	3	27241-400000	PLUG, 40	1	1						
7A	3	23414-170000	GASKET, 17X1.0	1	1						
7B	3	23894-030002	PLUG, G3/8	1	1						
8	2	129170-44110	CORE ASSY, COOLER	1	1						
9	2	129470-44440	COVER, A	1	1						
10	2	129470-44450	COVER, B	1	1						
11	2	120445-44600	FILLER ASSY	1	1						1
11-1	2	129171-44600	FILLER ASSY	1	1					R	2
(A=*1991.08)		(B=*1991.08)									
12	3	123682-44210	CAP, RADIATOR	1	1						
12-1	3	129107-44590	CAP, RADIATOR	1	1					S	
(A=*1991.08)		(B=*1991.08)									
13	3	123682-44220	CHAIN	1	1					Z	
(A=*1991.08)		(B=*1991.08)									
14	3	120445-44620	LABEL, CAUTION	1	1					Z	
(A=*1991.08)		(B=*1991.08)									
15	2	120445-44640	GASKET	1	1						
16	2	26106-080142	BOLT, M8X 14 PLATED	4	4						
16-1	2	26106-080162	BOLT, M8X 16 PLATED	4	4					S	
(A=*1991.08)		(B=*1991.08)									
17	2	24321-000750	O-RING, 1AG75.0	2	2						
18	2	26106-080252	BOLT, M8X 25 PLATED	4	4						
18A	2	120322-33050	GASKET	1	1					W	
(A=FROM 1ST)		(B=FROM 1ST)									
19	1	128170-13600	STUD, M8X31	4	4						
19-1	1	129690-13600	STUD, M8X34	4	4					R	
(A=E03783)		(B=E03783)									
20	1	26366-080002	NUT, M8	2	2						
20-1	1	26306-080002	NUT, M8	2	2					N	
(A=*2001.04)		(B=*2001.04)									
21	1	129150-13110	GASKET, EXH.MANIFOLD	1	1						
22	1	124460-77680	RETAINER	1	1						
23	1	23061-070300	PIPE, 7X 300	1	1						
24	1	26106-081002	BOLT, M8X100 PLATED	4	4						

Remarks
(1)120445-44600(Cup : Large)
(2)129171-44600(Cup : Small)

N:Old $\xleftrightarrow[\text{No}]{\text{Yes}}$ New, Q:Old $\xleftrightarrow[\text{Yes}]{\text{No}}$ New, R:Old $\xleftrightarrow[\text{Yes}]{\text{Yes}}$ New, S:Old $\xleftrightarrow[\text{No}]{\text{No}}$ New, W:Add, Z:Discontinued, F:Interchangeable by set, K:Q'ty Change

Copyright (C) 2014 YANMAR CO., LTD. All RightsReserved.

Fig.32. SUB-TANK

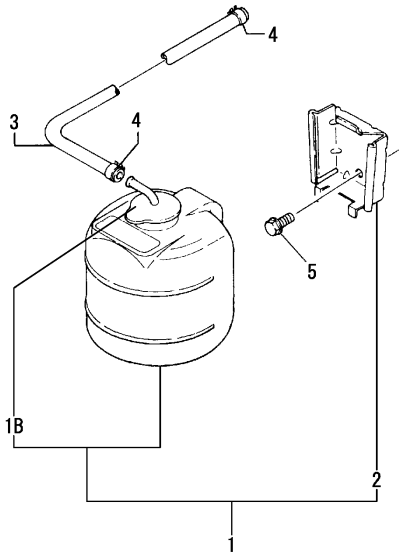

(A)=3JH25A
(B)=3JH30A
(C)=
(D)=
(E)=
(F)=

No.	Lev.	Parts No.	Description	Q'ty (A)	(B)	(C)	(D)	(E)	(F)	I	R
1	1	720445-44200	TANK ASSY, SUB	1	1						
1B	3	X0225000630	CAP	1	1						
2	2	120445-44540	SUPPORT	1	1						
3	1	145640-44570	PIPE	1	1						
4	1	23010-013000	CLAMP 13	2	2						
5	1	26106-080122	BOLT, M8X 12 PLATED	2	2						

N:Old $\xleftrightarrow[\text{No}]{\text{Yes}}$ New, Q:Old $\xleftrightarrow[\text{Yes}]{\text{No}}$ New, R:Old $\xleftrightarrow[\text{Yes}]{\text{Yes}}$ New, S:Old $\xleftrightarrow[\text{No}]{\text{No}}$ New, W:Add, Z:Discontinued, F:Interchangeable by set, K:Q'ty Change

Copyright (C) 2014 YANMAR CO., LTD. All RightsReserved.

Fig.33. KINGSTON COCK

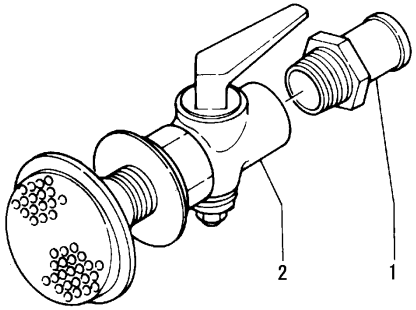

(A)=3JH25A (D)=
(B)=3JH30A (E)=
(C)= (F)=

No.	Lev.	Parts No.	Description	Q'ty (A)	(B)	(C)	(D)	(E)	(F)	I	R
1	1	43530-500570	JOINT, PIPE	1	1						
2	1	43662-025030	COCK ASSY, KINGSTON	1	1						
2-1	1	43662-025031	COCK, KINGSTON	1	1					N	
	(A=E03517)	(B=E03517)									

N:Old $\xleftrightarrow[\text{No}]{\text{Yes}}$ New, Q:Old $\xleftrightarrow[\text{Yes}]{\text{No}}$ New, R:Old $\xleftrightarrow[\text{Yes}]{\text{Yes}}$ New, S:Old $\xleftrightarrow[\text{No}]{\text{No}}$ New, W:Add, Z:Discontinued, F:Interchangeable by set, K:Q'ty Change

Copyright (C) 2014 YANMAR CO., LTD. All RightsReserved.

Fig.34. COOLING SEA WATER PIPE

(A)=3JH25A (D)=
(B)=3JH30A (E)=
(C)= (F)=

No.	Lev.	Parts No.	Description	Q'ty (A)	(B)	(C)	(D)	(E)	(F)	I	R
1	1	128695-44090	COCK	1	1						
1-1	1	129670-49290	COCK ASSY, R1/8	1	1					N	
	(A=*1999.07)	(B=*1999.07)									
2	1	129170-49010	PIPE, WATER	1	1						
3	1	129475-49020	PIPE, WATER	1	1						
4	1	129198-49040	PIPE, WATER	1	1						
5	1	129470-49040	PIPE, WATER	1	1						
6	1	124722-59050	CLAMP, HOSE 9	1	1						
6-1	1	124460-77680	RETAINER	1	1					R	
	(A=*1992.06)	(B=*1992.06)									
7	1	23000-035000	CLAMP, 35	6	6						
8	1	23061-070300	PIPE, 7X 300	1	1						
9	1	26106-080162	BOLT, M8X 16 PLATED	1	1						
10	1	23000-035000	CLAMP, 35	4	4						
11	1	23072-100060	HOSE, 10X 60	2	2						

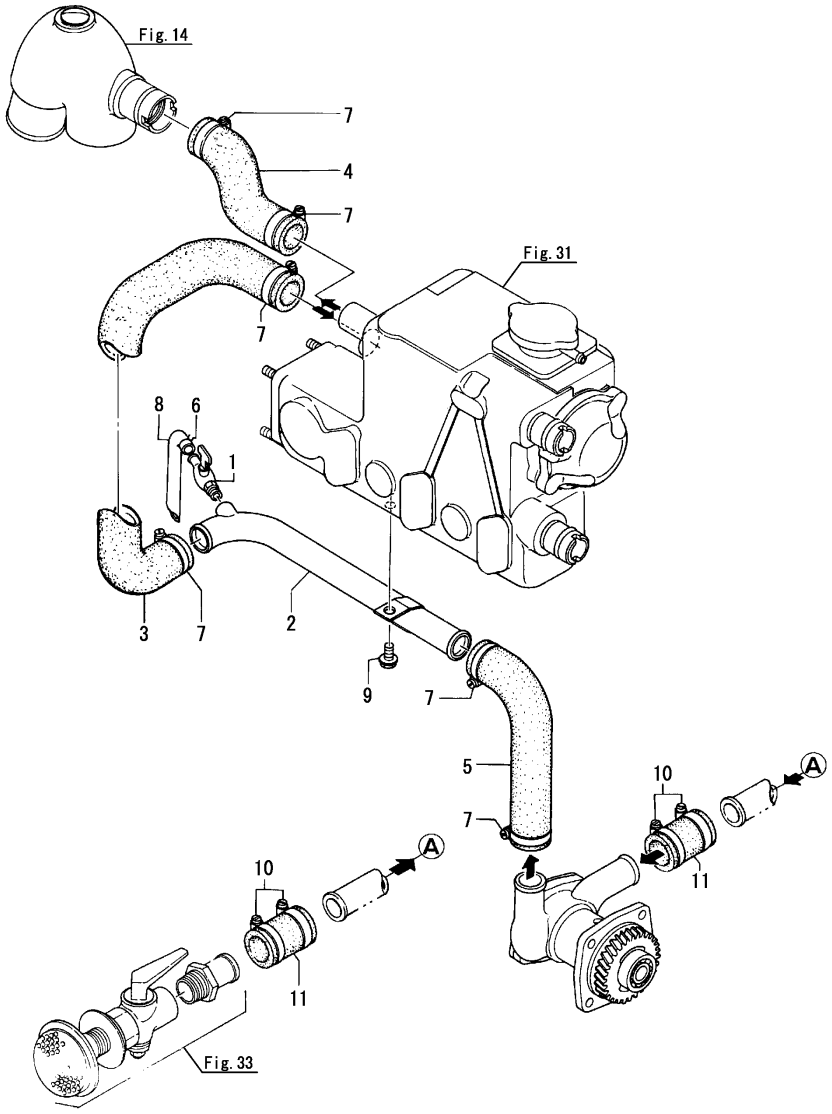

N:Old $\xleftarrow[\text{No}]{\text{Yes}}$ New, Q:Old $\xleftarrow[\text{Yes}]{\text{No}}$ New, R:Old $\xleftarrow[\text{Yes}]{\text{Yes}}$ New, S:Old $\xleftarrow[\text{No}]{\text{No}}$ New, W:Add, Z:Discontinued, F:Interchangeable by set, K:Q'ty Change

Copyright (C) 2014 YANMAR CO., LTD. All RightsReserved.

Fig.35. COOLING FRESH WATER PIPE

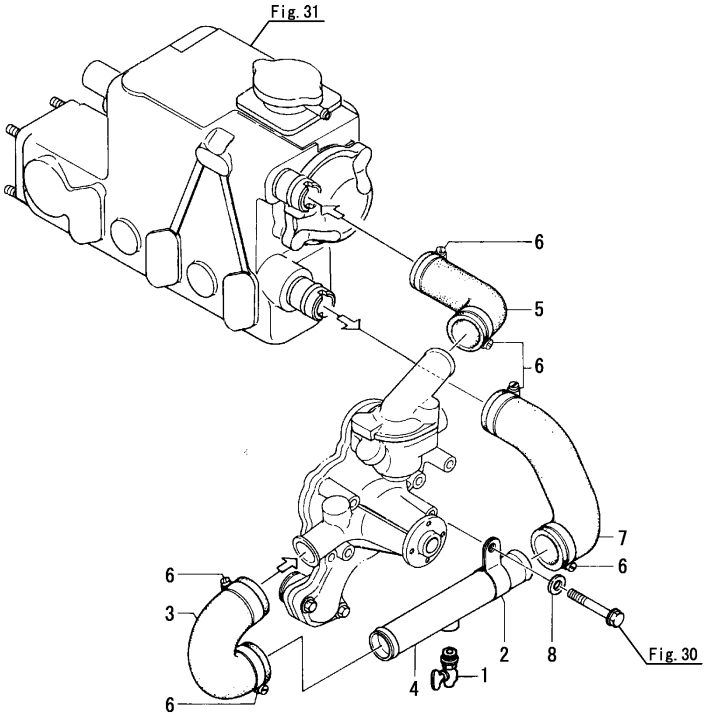

(A)=3JH25A (D)=
(B)=3JH30A (E)=
(C)= (F)=

No.	Lev.	Parts No.	Description	Q'ty (A)	(B)	(C)	(D)	(E)	(F)	I	R
1	1	128695-44090	COCK	1	1						
1-1	1	129670-49290	COCK ASSY, R1/8	1	1					N	
	(A=*1999.07)	(B=*1999.07)									
2	1	129470-49220	RETAINER	1	1						
3	1	129470-49240	JOINT, RUBBER 28	1	1						
4	1	129470-49250	PIPE, WATER	1	1						
5	1	129170-49260	JOINT	1	1						
6	1	23000-041000	CLAMP, 41	6	6						
7	1	129470-49200	JOINT, RUBBER	1	1						
8	1	22137-080000	WASHER, 8	1	1						

N:Old $\overset{\text{Yes}}{\underset{\text{No}}{\leftrightarrows}}$ New, Q:Old $\overset{\text{No}}{\underset{\text{Yes}}{\leftrightarrows}}$ New, R:Old $\overset{\text{Yes}}{\underset{\text{Yes}}{\leftrightarrows}}$ New, S:Old $\overset{\text{No}}{\underset{\text{No}}{\leftrightarrows}}$ New, W:Add, Z:Discontinued, F:Interchangeable by set, K:Q'ty Change

Copyright (C) 2014 YANMAR CO., LTD. All RightsReserved.

Fig.36. THERMOSTAT

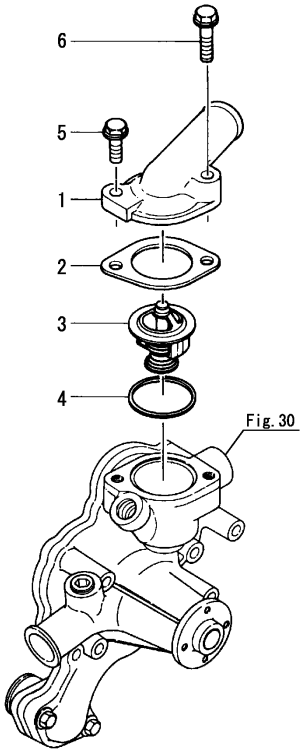

(A)=3JH25A (D)=
(B)=3JH30A (E)=
(C)= (F)=

No.	Lev.	Parts No.	Description	Q'ty (A)	(B)	(C)	(D)	(E)	(F)	I	R
1	1	129470-49540	COVER, THERMOSTAT	1	1						
2	1	129795-49550	GASKET	1	1						
2-1	1	129795-49551	GASKET	1	1					N	
	(A=*1993.04)	(B=*1993.04)									
3	1	129470-49801	THERMOSTAT, 76.5	1	1						
4	1	129150-49810	GASKET, THERMOSTAT	1	1						
4-1	1	129150-49811	GASKET, THERMOSTAT	1	1					R	
	(A=E06608)	(B=E06607)									
5	1	26106-080252	BOLT, M8X 25 PLATED	1	1						
6	1	26106-080352	BOLT, M8X 35 PLATED	1	1						

N:Old $\xleftrightarrow[\text{No}]{\text{Yes}}$ New, Q:Old $\xleftrightarrow[\text{Yes}]{\text{No}}$ New, R:Old $\xleftrightarrow[\text{Yes}]{\text{Yes}}$ New, S:Old $\xleftrightarrow[\text{No}]{\text{No}}$ New, W:Add, Z:Discontinued, F:Interchangeable by set, K:Q'ty Change

Copyright (C) 2014 YANMAR CO., LTD. All RightsReserved.

Fig.37. FUEL INJECTION PUMP

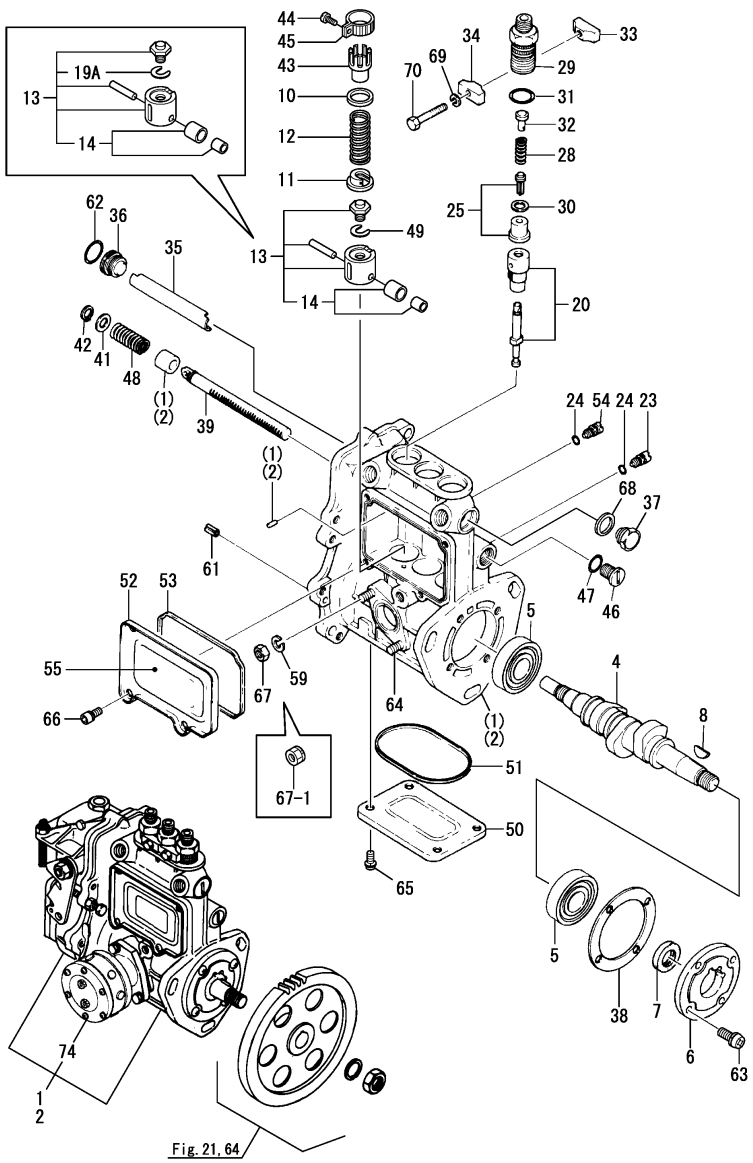

Remarks
(1)Fuel feed pump (Fig.38) and Governor [Fig.44, 93(44A)] is incorporated in this fuel injection pump (Ref.No.1, 2).

(A)=3JH25A (D)=
(B)=3JH30A (E)=
(C)= (F)=

No.	Lev.	Parts No.	Description	Q'ty (A)	(B)	(C)	(D)	(E)	(F)	I	R
1	1	729198-51300	PUMP ASSY, INJECTION	1							1
2	1	729198-51320	PUMP ASSY, INJECTION		1						1
4	3	119810-51040	CAMSHAFT	1	1						
5	3	122710-51050	BEARING, HR30203J	2	2						
6	3	129470-51060	RETAINER, BEARING	1	1						
7	3	129470-51080	SEAL, AF0741F0	1	1						
8	3	122710-51090	FEATHER KEY,WOODRUFF	1	1						
10	3	174307-51170	RETAINER, SPRING A	3	3						
11	3	129155-51180	RETAINER, SPRING	3	3						
12	3	124950-51190	SPRING, PLUNGER	3	3						
13	3	129155-51200	TAPPET ASSY	3	3						
14	4	711100-51540	ROLLER ASSY	3	3						
19A	4	129155-51630	SHIM, ADJUST T=1.2	3	3					W	
	(A=*2006.10)	(B=*2006.10)									
20	3	129400-51200	PLUNGER ASSY	3	3						
23	3	129155-51270	STOPPER, TAPPET	3	3						
23-1	3	158600-51270	STOPPER, TAPPET	3	3					R	
	(A=E07110)	(B=E07119)									
24	3	129155-51280	O-RING, S6	3	3						
25	3	128170-51300	VALVE ASSY, DELIVERY	3	3						
28	3	129155-51320	SPRING, DELIVERY	3	3						
29	3	129155-51340	HOLDER, DELIVERY	3	3						
30	3	124550-51350	GASKET, DELIVERY	3	3						
31	3	124550-51370	O-RING	3	3						
31-1	3	24316-000150	O-RING, 4DP15.0	3	3					N	
	(A=E02602)	(B=E02616)									
32	3	129155-51370	STOPPER, DELIVERY	3	3						
33	3	129155-51380	STOPPER, DELIVERY	2	2						
34	3	129155-51390	STOPPER, DELIVERY	2	2						
35	3	129155-51400	DEFLECTOR	1	1						
36	3	129155-51410	PLUG, SCREW	1	1						
36-1	3	158600-51410	PLUG, DEFLECTOR	1	1					R	
	(A=E03419)	(B=E03440)									
37	3	129155-51420	PLUG, M16	1	1						
37-1	3	158600-51420	PLUG, DEFLECTOR	1	1					R	
	(A=E03335)	(B=E03341)									
38	3	129155-51450	SHIM SET, ADJUSTING	1	1						
39	3	129155-51500	RACK, CONTROL	1	1						
39-1	3	119717-51500	RACK, CONTROL	1	1					R	
	(A=*2005.09)	(B=*2005.09)									
41	3	129155-51530	SPACER	1	1						
42	3	129155-51540	CIRCLIP	1	1						
43	3	129155-51550	PINION, CONTROL	3	3						
44	3	122117-51560	SCREW	3	3						
44-1	3	129100-51570	SCREW, PINION	3	3					N	
	(A=*2000.12)	(B=*2000.12)									
45	3	174307-51560	PINION	3	3						
45-1	3	129100-51560	PINION	3	3					N	
	(A=*2000.12)	(B=*2000.12)									
46	3	129155-51570	PLUG, M12	1	1						
46-1	3	158600-51570	PLUG, RACK	1	1					R	

N:Old $\overset{\text{Yes}}{\underset{\text{No}}{\leftrightarrows}}$ New, Q:Old $\overset{\text{No}}{\underset{\text{Yes}}{\leftrightarrows}}$ New, R:Old $\overset{\text{Yes}}{\underset{\text{Yes}}{\leftrightarrows}}$ New, S:Old $\overset{\text{No}}{\underset{\text{No}}{\leftrightarrows}}$ New, W:Add, Z:Discontinued, F:Interchangeable by set, K:Q'ty Change

++ CONTINUE ++

Copyright (C) 2014 YANMAR CO., LTD. All RightsReserved.

Fig.37. FUEL INJECTION PUMP

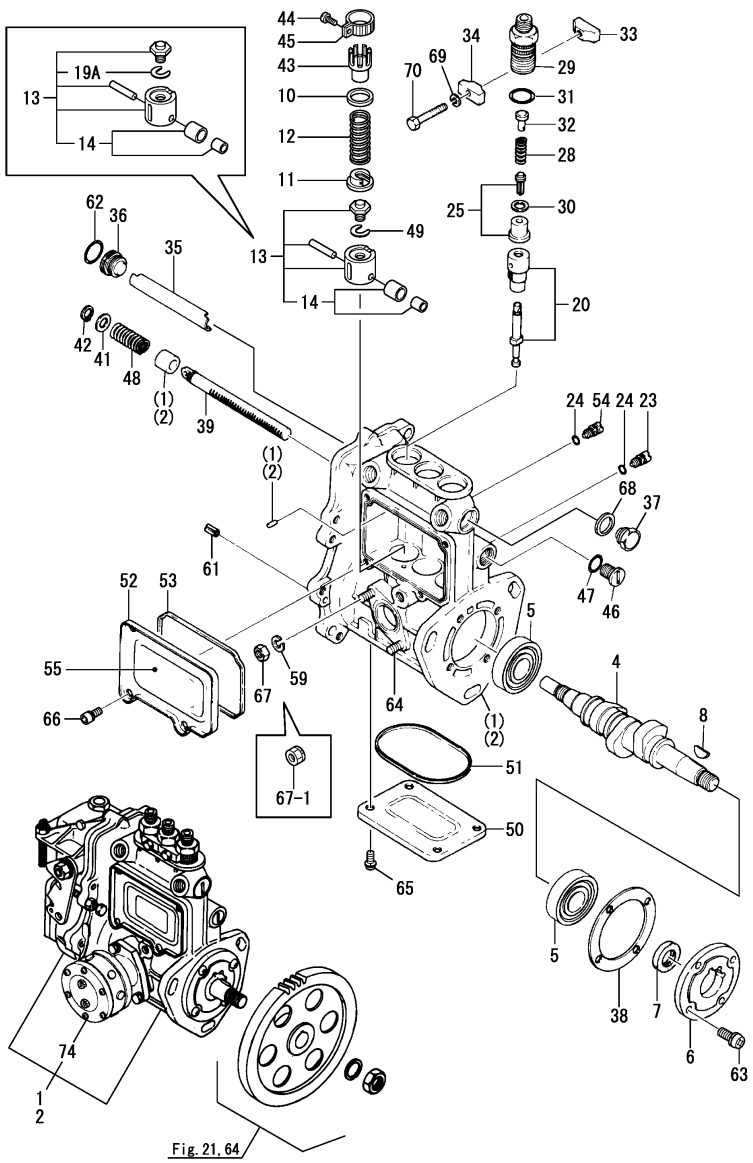

Remarks
(1)Fuel feed pump (Fig.38) and Governor [Fig.44, 93(44A)] is incorporated in this fuel injection pump (Ref.No.1, 2).

(A)=3JH25A (D)=
(B)=3JH30A (E)=
(C)= (F)=

No.	Lev.	Parts No.	Description	Q'ty (A)	(B)	(C)	(D)	(E)	(F)	I	R
	(A=E07238)	(B=E07202)									
47	3	129155-51580	O-RING	1	1						
48	3	129155-51591	SPRING, RACK	1	1						
49	3	129155-51600	SHIM SET, ADJUSTING	3	3					Z	
	(A=*2006.10)	(B=*2006.10)									
50	3	129155-51700	COVER	1	1						
50-1	3	129155-51701	COVER	1	1					N	
	(A=*1999.10)	(B=*1999.10)									
51	3	129155-51710	GASKET	1	1						
51-1	3	129155-51711	GASKET	1	1					N	
	(A=*2000.10)	(B=*2000.10)									
52	3	129155-51750	COVER	1	1						
52-1	3	129155-51751	COVER	1	1					N	
	(A=*1999.10)	(B=*1999.10)									
53	3	129155-51760	GASKET	1	1						
53-1	3	129155-51761	GASKET	1	1					N	
	(A=E00156)	(B=E00160)									
54	3	129155-51790	STOPPER, RACK	1	1						
54-1	3	158600-51790	STOPPER, RACK	1	1					R	
	(A=E07286)	(B=E07295)									
55	3	129156-51910	LABEL, CAUTION	1	1						
59	3	22217-060000	WASHER, SPRING 6	2	2					Z	
	(A=E06614)	(B=E06643)									
61	3	22351-050010	PIN, SPRING 5.0X10	2	2						
62	3	24341-000160	O-RING, 1AS16.0	1	1						
62-1	3	119717-51420	O-RING	1	1					N	
	(A=E02602)	(B=E02616)									
63	3	26022-060162	SCREW, M6X16	4	4						
64	3	26216-060162	STUD, M6X 16	2	2						
64-1	3	129155-51020	BOLT, STUD	2	2					R	
	(A=*1987.11)	(B=*1987.11)									
65	3	26022-050102	SCREW, M5X10	4	4						
65-1	3	26022-050122	SCREW, M5X12	4	4					N	
	(A=*1999.10)	(B=*1999.10)									
66	3	26022-050102	SCREW, M5X10	4	4						
66-1	3	26022-050122	SCREW, M5X12	4	4					N	
	(A=*1999.10)	(B=*1999.10)									
67	3	26716-060002	NUT, M6	2	2						
67-1	3	119717-51860	NUT, M6	2	2					R	
	(A=E06614)	(B=E06643)									
68	3	43400-500490	SEAL WASHER 16S	1	1						
68-1	3	22190-160002	WASHER, SEAL 16	1	1					N	
	(A=*1993.06)	(B=*1993.06)									
69	3	22217-050000	WASHER, SPRING 5	2	2						
70	3	26116-050302	BOLT, M5X 30 PLATED	2	2						
74	2	129491-52000	PUMP ASSY, FUEL FEED	1	1						

N:Old $\xleftarrow[\text{No}]{\text{Yes}}$ New, Q:Old $\xleftarrow[\text{Yes}]{\text{No}}$ New, R:Old $\xleftarrow[\text{Yes}]{\text{Yes}}$ New, S:Old $\xleftarrow[\text{No}]{\text{No}}$ New, W:Add, Z:Discontinued, F:Interchangeable by set, K:Q'ty Change

Copyright (C) 2014 YANMAR CO., LTD. All RightsReserved.

Fig.38. FUEL FEED PUMP

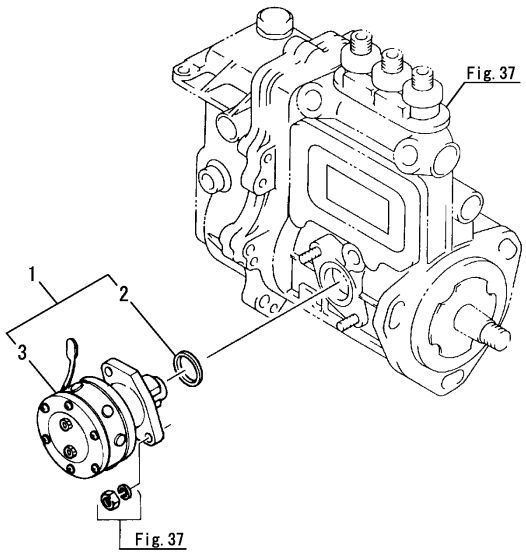

(A)=3JH25A (D)=
(B)=3JH30A (E)=
(C)= (F)=

No.	Lev.	Parts No.	Description	Q'ty (A)	(B)	(C)	(D)	(E)	(F)	I	R
1	2	129491-52000	PUMP ASSY, FUEL FEED	1	1						
2	3	129155-52050	GASKET	1	1						
2-1	3	129155-52051	GASKET	1	1					N	
	(A=E00155)	(B=E00160)									
3	3	129491-52100	PUMP ASSY, FUEL FEED	1	1						
3-1	3	129491-52101	PUMP ASSY, FEED	1	1					N	
	(A=E00702)	(B=E00714)									

N:Old $\xleftarrow[\text{No}]{\text{Yes}}$ New, Q:Old $\xleftarrow[\text{Yes}]{\text{No}}$ New, R:Old $\xleftarrow[\text{Yes}]{\text{Yes}}$ New, S:Old $\xleftarrow[\text{No}]{\text{No}}$ New, W:Add, Z:Discontinued, F:Interchangeable by set, K:Q'ty Change

Copyright (C) 2014 YANMAR CO., LTD. All RightsReserved.

Fig.39. FUEL INJECTION VALVE

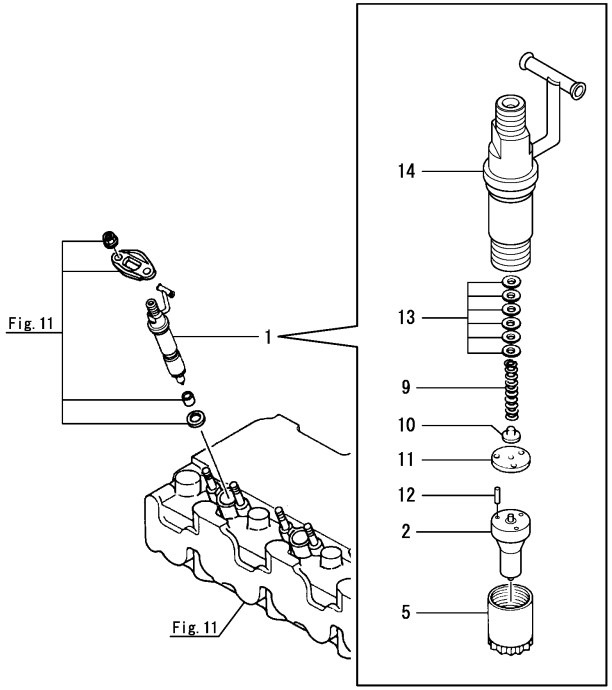

(A)=3JH25A (D)=
(B)=3JH30A (E)=
(C)= (F)=

No.	Lev.	Parts No.	Description	Q'ty (A)	(B)	(C)	(D)	(E)	(F)	I	R
1	1	729100-53000	VALVE ASSY,INJECTION	3	3						
1-1	1	729198-53100	VALVE ASSY,INJECTION	3	3					N	
	(A=*1991.03)	(B=*1991.03)									
2	2	129100-53000	NOZZLE ASSY, F.I.	3	3						1
5	2	114250-53080	NUT, NOZZLE	3	3						
9	2	114250-53120	SPRING, NOZZLE	3	3						
10	2	114250-53130	SEAT, SPRING	3	3						
11	2	114250-53140	SPACER	3	3						
12	2	114250-53210	PIN	6	6						
13	2	114250-53400	SHIM SET	3	3						
13-1	2	119803-53400	SHIM SET	3	3					R	
	(A=E04155)	(B=E04158)									
14	2	129470-11920	GASKET	3	3					W	
	(A=*1987.05)	(B=*1987.05)									
14-1	2	129685-11930	GASKET, NOZZLE	3	3					R	
	(A=E02347)	(B=E02337)									

Remarks
(1)Enbossed mark : YDLLA-150P244HC0

N:Old $\xleftarrow[\text{No}]{\text{Yes}}$ New, Q:Old $\xleftarrow[\text{Yes}]{\text{No}}$ New, R:Old $\xleftarrow[\text{Yes}]{\text{Yes}}$ New, S:Old $\xleftarrow[\text{No}]{\text{No}}$ New, W:Add, Z:Discontinued, F:Interchangeable by set, K:Q'ty Change

Copyright (C) 2014 YANMAR CO., LTD. All RightsReserved.

Fig.40. FUEL STRAINER

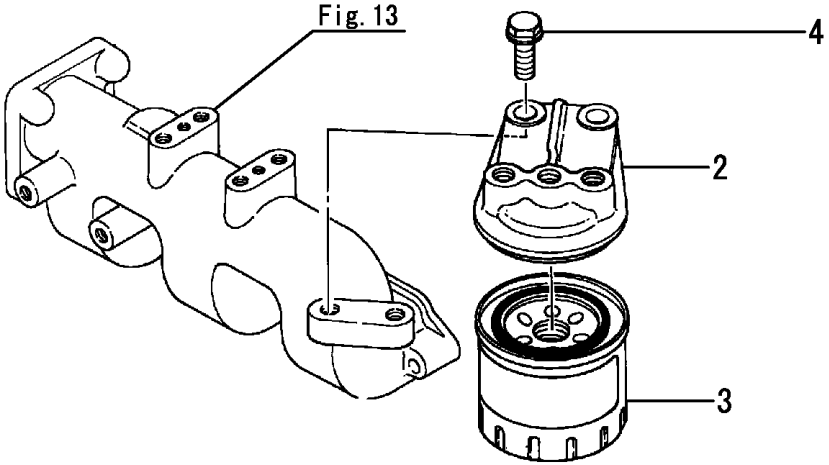

Remarks
(1)Non-branded filter(without Yanmar logo).
(2)Branded filter(with Yanmar logo).

(A)=3JH25A (D)=
(B)=3JH30A (E)=
(C)= (F)=

No.	Lev.	Parts No.	Description	Q'ty (A)	(B)	(C)	(D)	(E)	(F)	I	R
2	1	129470-55610	BODY, STRAINER	1	1						
3	1	129470-55700	STRAINER	1	1						1
3-1	1	129470-55701	STRAINER ASSY, FUEL	1	1					R	1
	(A=*1991.01)		(B=*1991.01)								
3-2	1	129470-55702	FILTER, FUEL	1	1					R	1
	(A=E00106)		(B=E00106)								
3-3	1	129470-55703	FILTER, FUEL	1	1					R	1
	(A=E02987)		(B=E02987)								
3-4	1	129470-55810	FILTER, FUEL	1	1					R	2
4	1	26106-100302	BOLT, M10X 30 PLATED	2	2						

N:Old $\xleftarrow[\text{No}]{\text{Yes}}$ New, Q:Old $\xleftarrow[\text{Yes}]{\text{No}}$ New, R:Old $\xleftarrow[\text{Yes}]{\text{Yes}}$ New, S:Old $\xleftarrow[\text{No}]{\text{No}}$ New, W:Add, Z:Discontinued, F:Interchangeable by set, K:Q'ty Change

Copyright (C) 2014 YANMAR CO., LTD. All RightsReserved.

Fig.41. FUEL INJECTION PIPE

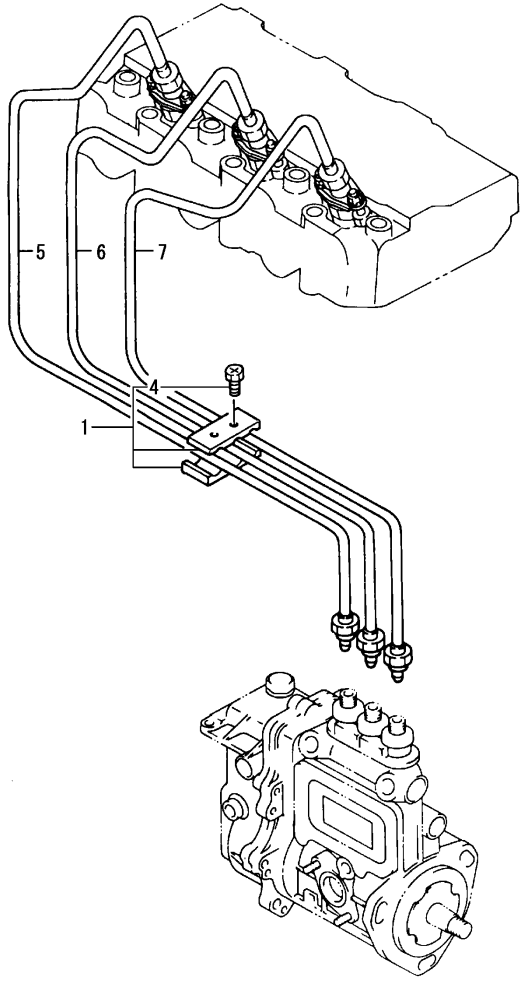

(A)=3JH25A (D)=
(B)=3JH30A (E)=
(C)= (F)=

No.	Lev.	Parts No.	Description	Q'ty (A)	(B)	(C)	(D)	(E)	(F)	I	R
1	1	129150-59120	RETAINER, PIPE	1	1						
4	2	129150-59130	BOLT, M4X12	2	2						
5	1	129100-59810	PIPE ASSY, INJECTION	1	1						
5-1	1	129100-59811	PIPE ASSY, INJECTION	1	1					R	
	(A=*1995.01)	(B=*1995.01)									
6	1	129100-59820	PIPE ASSY, INJECTION	1	1						
6-1	1	129100-59821	PIPE ASSY, INJECTION	1	1					R	
	(A=*1995.01)	(B=*1995.01)									
7	1	129100-59830	PIPE ASSY, INJECTION	1	1						
7-1	1	129100-59831	PIPE ASSY, INJECTION	1	1					R	
	(A=*1995.01)	(B=*1995.01)									

N:Old $\xleftrightarrow[\text{No}]{\text{Yes}}$ New, Q:Old $\xleftrightarrow[\text{Yes}]{\text{No}}$ New, R:Old $\xleftrightarrow[\text{Yes}]{\text{Yes}}$ New, S:Old $\xleftrightarrow[\text{No}]{\text{No}}$ New, W:Add, Z:Discontinued, F:Interchangeable by set, K:Q'ty Change

Copyright (C) 2014 YANMAR CO., LTD. All RightsReserved.

Fig.42. FUEL PIPE

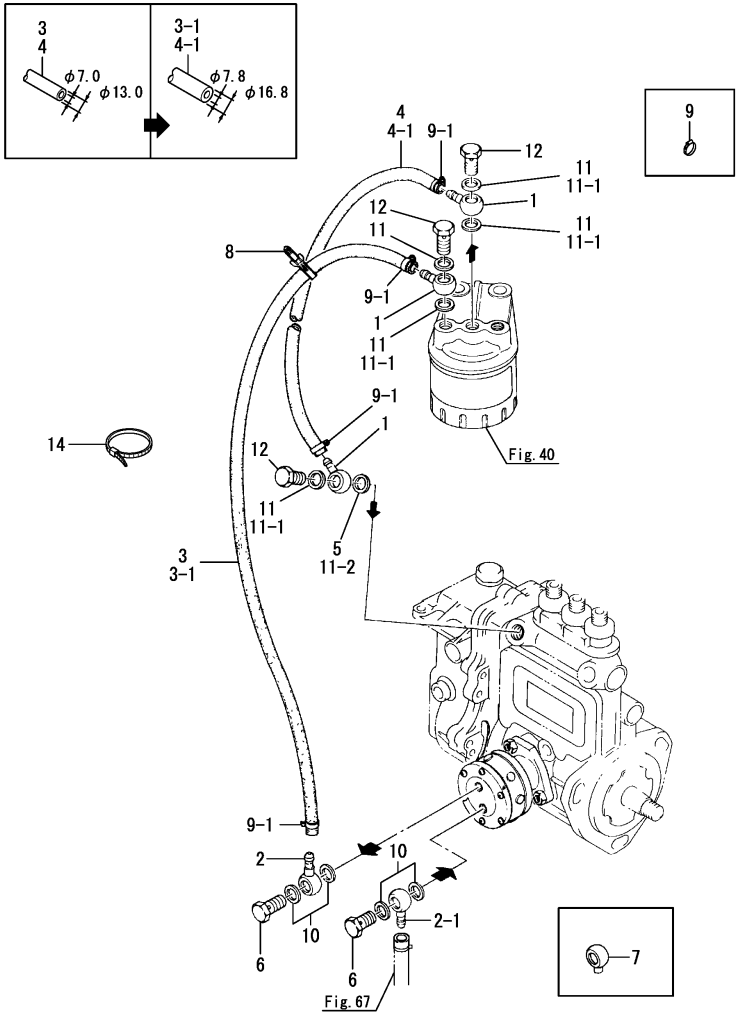

(A)=3JH25A (D)=
(B)=3JH30A (E)=
(C)= (F)=

No.	Lev.	Parts No.	Description	Q'ty (A)	(B)	(C)	(D)	(E)	(F)	I	R
1	1	104264-59020	JOINT	3	3						
1-1	1	101304-59020	JOINT, PIPE 12	3	3					N	
	(A=*1987.11)	(B=*1987.11)									
2	1	104264-59030	JOINT, PIPE 8	1	1						
2-1	1	104264-59030	JOINT, PIPE 8	2	2					K	
	(A=E02912)	(B=E01412)									
3	1	129470-59120	PIPE, FUEL	1	1						
3-1	1	129570-59121	PIPE, FUEL	1	1					R	
	(A=E02844)	(B=E01386)									
4	1	129470-59120	PIPE, FUEL	1	1						
4-1	1	129470-59122	PIPE, FUEL	1	1					R	
	(A=E02844)	(B=E01386)									
5	1	104200-59170	GASKET, 12	1	1					Z	
	(A=E00106)	(B=E00111)									
6	1	129198-59540	BOLT, PIPE JOINT M8	2	2						
7	1	124223-59750	JOINT	1	1					Z	1
	(A=E02912)	(B=E01412)									
8	1	121750-59890	BAND, NYLON	1	1						
9	1	23080-013000	CLAMP, 13	4	4						
9-1	1	23000-016000	CLAMP, 16	4	4					S	
	(A=E02844)	(B=E01386)									
10	1	23414-080000	GASKET, 8X1.0	4	4						
10-1	1	22190-080002	WASHER, SEAL 8	4	4					N	
	(A=E02387)	(B=E01090)									
11	1	23414-120000	GASKET, 12X1.0	5	5						
11-1	1	22190-120002	WASHER, SEAL 12	5	5					N	
	(A=E02387)	(B=E01090)									
11-2	1	22190-120002	WASHER, SEAL 12	6	6					K	
	(A=E00106)	(B=E00111)									
12	1	23857-060000	BOLT, JOINT 6	3	3						
14	1	198220-51870	BAND, NYLON 200	1	1					W	
	(A=E00658)	(B=E00658)									

Remarks
(1)Steel pipe is shipbuliding arranges.

N:Old $\xleftarrow[\text{No}]{\text{Yes}}$ New, Q:Old $\xleftarrow[\text{Yes}]{\text{No}}$ New, R:Old $\xleftarrow[\text{Yes}]{\text{Yes}}$ New, S:Old $\xleftarrow[\text{No}]{\text{No}}$ New, W:Add, Z:Discontinued, F:Interchangeable by set, K:Q'ty Change

Copyright (C) 2014 YANMAR CO., LTD. All RightsReserved.

Fig.43. FUEL RETURN PIPE

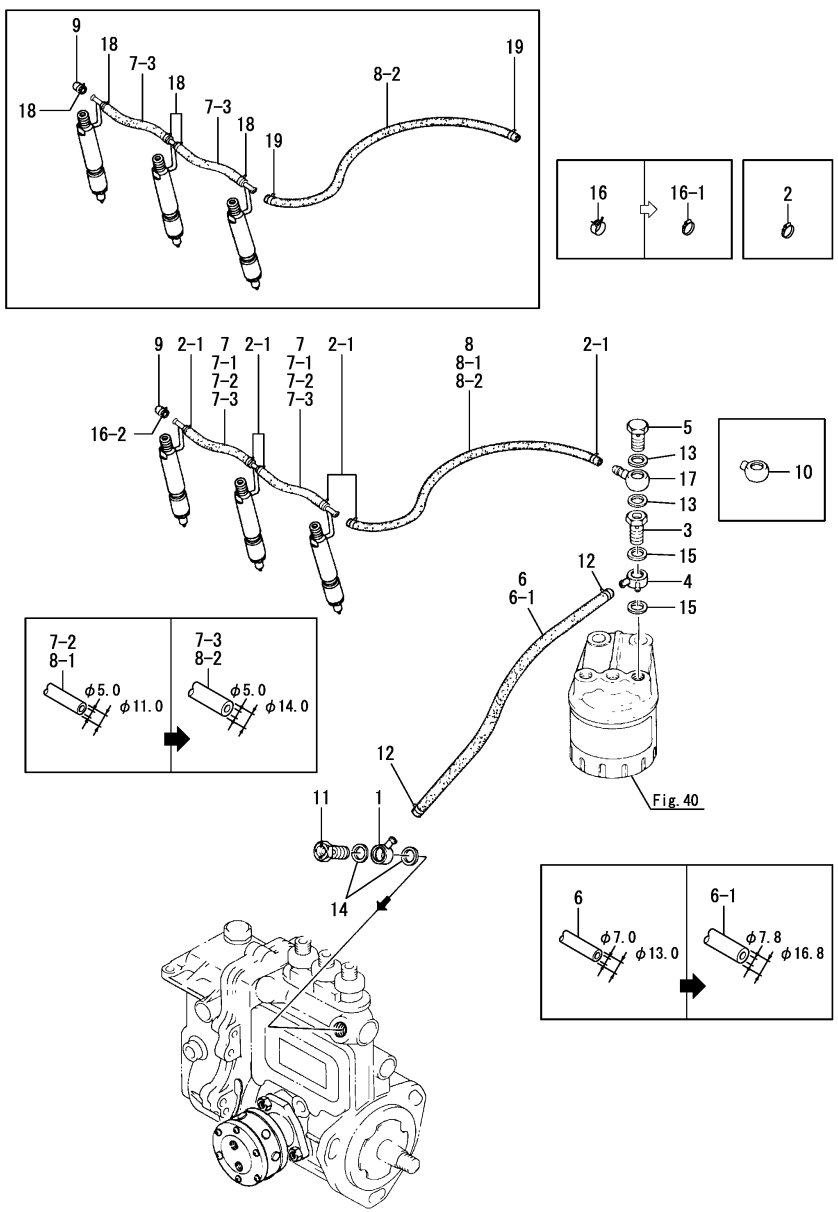

Remarks
(1)Steel pipe is shipbuliding arranges.

(A)=3JH25A (D)=
(B)=3JH30A (E)=
(C)= (F)=

No.	Lev.	Parts No.	Description	Q'ty (A)	(B)	(C)	(D)	(E)	(F)	I	R
1	1	101304-59020	JOINT, PIPE 12	1	1						
2	1	23000-013000	CLAMP, 13	6	6						
2-1	1	23000-016000	CLAMP, 16	6	6					S	
	(A=E02844)	(B=E01386)									
2-2	1	23000-016000	CLAMP, 16	6	6					Z	
	(A=E00106)	(B=E00111)									
3	1	129495-59300	BOLT, PIPE JOINT	1	1						
4	1	129198-59530	JOINT, PIPE	1	1						
5	1	129198-59540	BOLT, PIPE JOINT M8	1	1						
6	1	129470-59540	PIPE, FUEL	1	1						
6-1	1	129470-59542	PIPE, FUEL	1	1					R	
	(A=E02844)	(B=E01386)									
7	1	121250-59550	HOSE, FUEL D8X120	2	2						
7-1	1	119000-59550	HOSE, FUEL RETURN	2	2					N	
	(A=*1986.06)	(B=*1986.06)									
7-2	1	129495-59551	PIPE, FUEL RETURN	2	2					N	
	(A=*1989.11)	(B=*1989.11)									
7-3	1	129270-59550	PIPE, FUEL	2	2					R	
	(A=E02844)	(B=E01386)									
8	1	129470-59560	PIPE, FUEL RETURN	1	1						
8-1	1	129495-59561	HOSE, FUEL L=230	1	1					N	
	(A=*1989.11)	(B=*1989.11)									
8-2	1	129470-59562	PIPE, FUEL	1	1					R	
	(A=E02844)	(B=E01386)									
9	1	129150-59580	CAP	1	1						
9-1	1	119593-59580	CAP	1	1					N	
	(A=E01765)	(B=E00796)									
9-2	1	129270-59580	CAP	1	1					R	
	(A=E02844)	(B=E01386)									
10	1	124223-59750	JOINT	1	1					Z	1
	(A=E02912)	(B=E01412)									
11	1	129100-59951	VALVE ASSY, CHECK	1	1						
11-1	1	119813-59950	VALVE ASSY, CHECK	1	1					N	
	(A=E00219)	(B=E00238)									
12	1	23080-013000	CLAMP, 13	2	2					Z	
	(A=E00106)	(B=E00111)									
12-1	1	23000-016000	CLAMP, 16	2	2					W	
	(A=E00106)	(B=E00111)									
13	1	23414-080000	GASKET, 8X1.0	2	2						
13-1	1	22190-080002	WASHER, SEAL 8	2	2					N	
	(A=E02387)	(B=E01090)									
14	1	23414-120000	GASKET, 12X1.0	2	2						
14-1	1	22190-120002	WASHER, SEAL 12	2	2					N	
	(A=E02387)	(B=E01090)									
15	1	23414-140000	GASKET, 14X1.0	2	2						
15-1	1	22190-140002	WASHER, SEAL 14	2	2					N	
	(A=E02387)	(B=E01090)									
16	1	124066-59100	CLAMP, HOSE 8	1	1						
16-1	1	119593-59590	BAND	1	1					N	
	(A=E01765)	(B=E00796)									
16-2	1	23000-013000	CLAMP, 13	1	1					S	

N:Old $\xleftarrow[\text{No}]{\text{Yes}}$ New, Q:Old $\xleftarrow[\text{Yes}]{\text{No}}$ New, R:Old $\xleftarrow[\text{Yes}]{\text{Yes}}$ New, S:Old $\xleftarrow[\text{No}]{\text{No}}$ New, W:Add, Z:Discontinued, F:Interchangeable by set, K:Q'ty Change

++ CONTINUE ++

Copyright (C) 2014 YANMAR CO., LTD. All RightsReserved.

Fig.43. FUEL RETURN PIPE

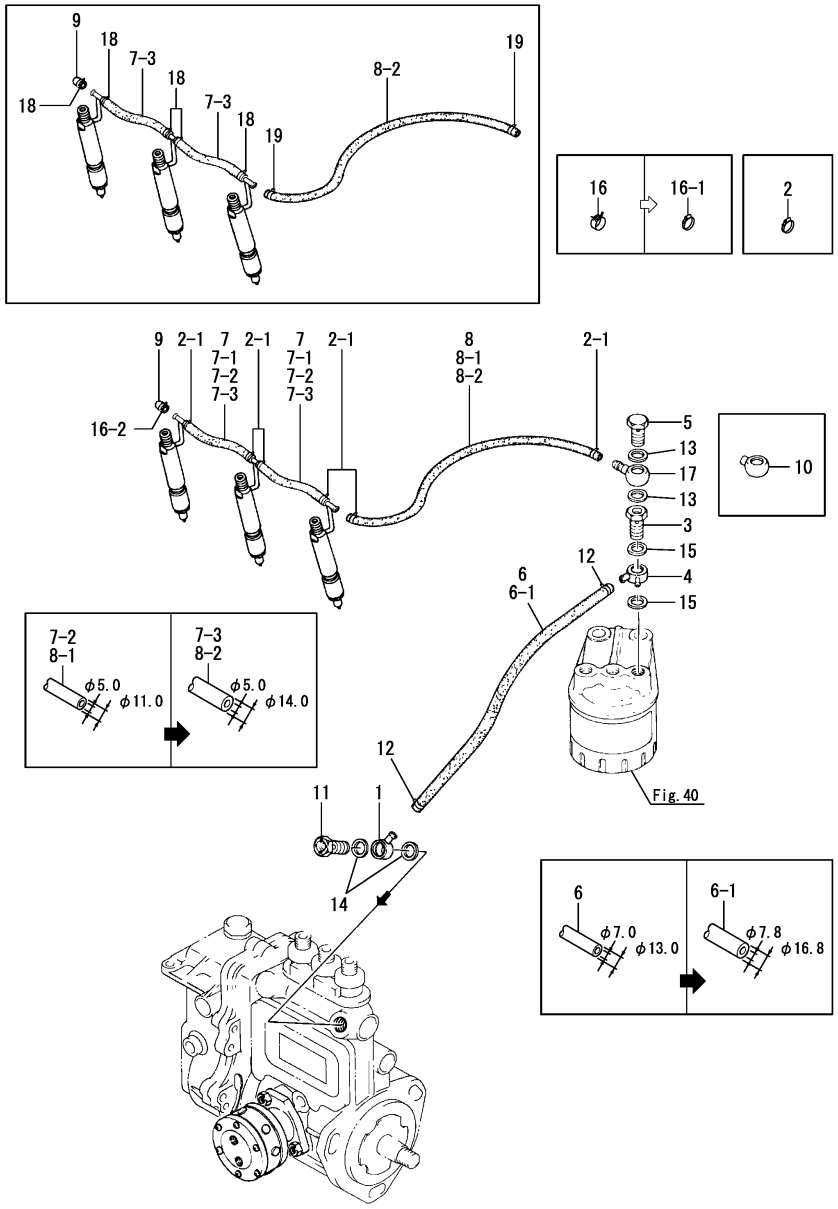

(A)=3JH25A (D)=
(B)=3JH30A (E)=
(C)= (F)=

No.	Lev.	Parts No.	Description	Q'ty (A)	(B)	(C)	(D)	(E)	(F)	I	R
		(A=E02844) (B=E01386)									
16-3	1	23000-013000	CLAMP, 13	1	1					Z	
		(A=E00106) (B=E00111)									
17	1	104264-59030	JOINT, PIPE 8	1	1					W	
		(A=E02912) (B=E01412)									
18	1	23000-013000	CLAMP, 13	5	5					W	
		(A=E00106) (B=E00111)									
19	1	23000-013000	CLAMP, 13	2	2					W	
		(A=E00106) (B=E00111)									

Remarks
(1)Steel pipe is shipbuliding arranges.

N:Old $\xleftarrow[\text{No}]{\text{Yes}}$ New, Q:Old $\xleftarrow[\text{Yes}]{\text{No}}$ New, R:Old $\xleftarrow[\text{Yes}]{\text{Yes}}$ New, S:Old $\xleftarrow[\text{No}]{\text{No}}$ New, W:Add, Z:Discontinued, F:Interchangeable by set, K:Q'ty Change

Copyright (C) 2014 YANMAR CO., LTD. All RightsReserved.

Fig.44. GOVERNOR(TO DEC., 1991)

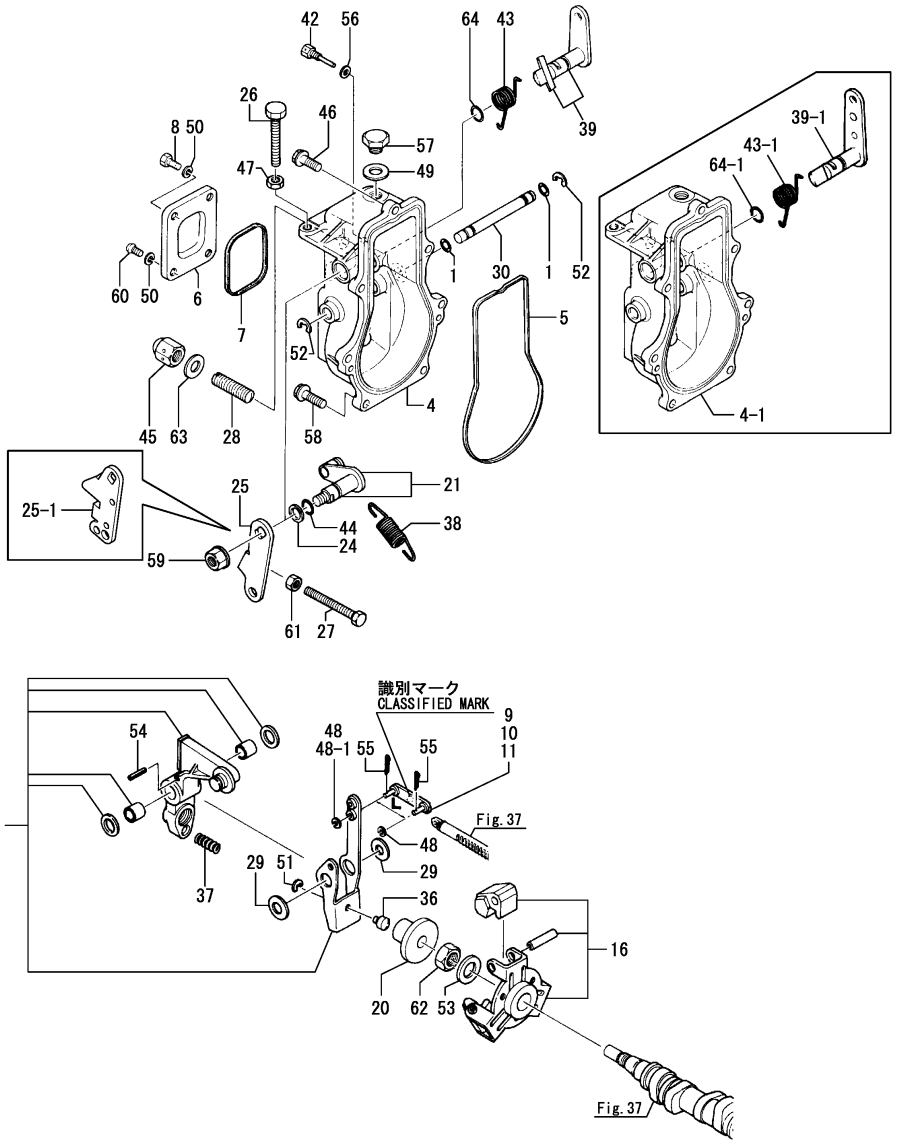

(A)=3JH25A (D)=
(B)=3JH30A (E)=
(C)= (F)=

No.	Lev.	Parts No.	Description	Q'ty (A)	(B)	(C)	(D)	(E)	(F)	I	R
1	2	129155-51280	O-RING, S6	2	2						
4	2	129155-61010	CASE, GOVERNOR	1	1						
4-1	2	129155-61011	CASE, GOVERNOR	1	1					S	2
	(A=*1988.09)	(B=*1988.09)									
5	2	129155-61050	GASKET	1	1						
6	2	129155-61060	COVER, GOVERNOR CASE	1	1						
7	2	129155-61070	GASKET	1	1						
8	2	129155-61090	BOLT	1	1						
9	2	129155-61120	LINK, L=30 MARK 0	1	1						1
10	2	129155-61130	LINK, L=31 MARK 1	1	1						1
11	2	129155-61140	LINK, L=30.5 MARK 05	1	1						1
16	2	129155-61201	WEIGHT ASSY,GOVERNOR	1	1						
20	2	129155-61341	SLEEVE	1	1						
21	2	129155-61400	SHAFT ASSY	1	1						
24	2	129155-61430	SHIM, SHAFT	1	1						
25	2	129470-61440	LEVER, CONTROL	1	1						
25-1	2	129499-61440	LEVER, CONTROL	1	1					N	
	(A=*1988.05)	(B=*1988.05)									
26	2	129470-61450	BOLT, LIMITER	1	1						
26-1	2	129155-61450	BOLT, LIMITING	1	1					N	
	(A=*1988.05)	(B=*1988.05)									
27	2	129155-61460	BOLT, LIMITING	1	1						
28	2	129155-61470	BOLT, FO CONTROL	1	1						
29	2	129155-61480	SHIM ASSY	2	2						
30	2	129155-61490	SHAFT	1	1						
31	2	129155-61500	LEVER ASSY, GOVERNOR	1	1						
36	2	129155-61540	SHIFTER	1	1						
37	2	129470-61650	SPRING, FUEL CONTROL	1	1						
38	2	129198-61700	SPRING, GOVERNOR	1	1						
39	2	129473-61800	LEVER ASSY, STOP	1	1						
39-1	2	129473-61801	LEVER, STOP	1	1					S	2
	(A=*1988.09)	(B=*1988.09)									
42	2	129155-61810	PIN	1	1						
43	2	129155-61820	SPRING, RETURN	1	1						
43-1	2	129100-61821	SPRING, RETURN	1	1					S	2
	(A=*1988.09)	(B=*1988.09)									
44	2	129155-61830	O-RING, S10	1	1						
45	2	129100-61930	NUT, CAP	1	1						
46	2	129155-61950	BOLT	1	1						
47	2	124550-66370	NUT, M6	1	1						
48	2	22117-040000	WASHER, 4	2	2						
48-1	2	22117-040000	WASHER, 4	1	1					K	
	(A=*1992.04)	(B=*1992.04)									
49	2	22190-100000	WASHER, SEAL 10	1	1						
50	2	22217-050000	WASHER, SPRING 5	4	4						
51	2	22272-000040	RING, E- 4	1	1						
52	2	22272-000060	RING, E- 6	2	2						
53	2	22282-120000	WASHER 12	1	1						
54	2	22351-030016	PIN, SPRING 3.0X16	1	1						
55	2	22360-050000	SNAP PIN 5	2	2						
55-1	2	22372-040000	PIN, SNAP 4	2	2					R	

Remarks
(1)Certain the classification mark, then place your order(Refer to illustration).
(2)Interchangeable by simultaneous replacement with No.4-1, 39-1, 43-1 & 64-1.

N:Old $\overset{\text{Yes}}{\underset{\text{No}}{\leftrightarrow}}$ New, Q:Old $\overset{\text{No}}{\underset{\text{Yes}}{\leftrightarrow}}$ New, R:Old $\overset{\text{Yes}}{\underset{\text{Yes}}{\leftrightarrow}}$ New, S:Old $\overset{\text{No}}{\underset{\text{No}}{\leftrightarrow}}$ New, W:Add, Z:Discontinued, F:Interchangeable by set, K:Q'ty Change

++ CONTINUE ++

Copyright (C) 2014 YANMAR CO., LTD. All RightsReserved.

Fig.44. GOVERNOR(TO DEC., 1991)

(A)=3JH25A (D)=
(B)=3JH30A (E)=
(C)= (F)=

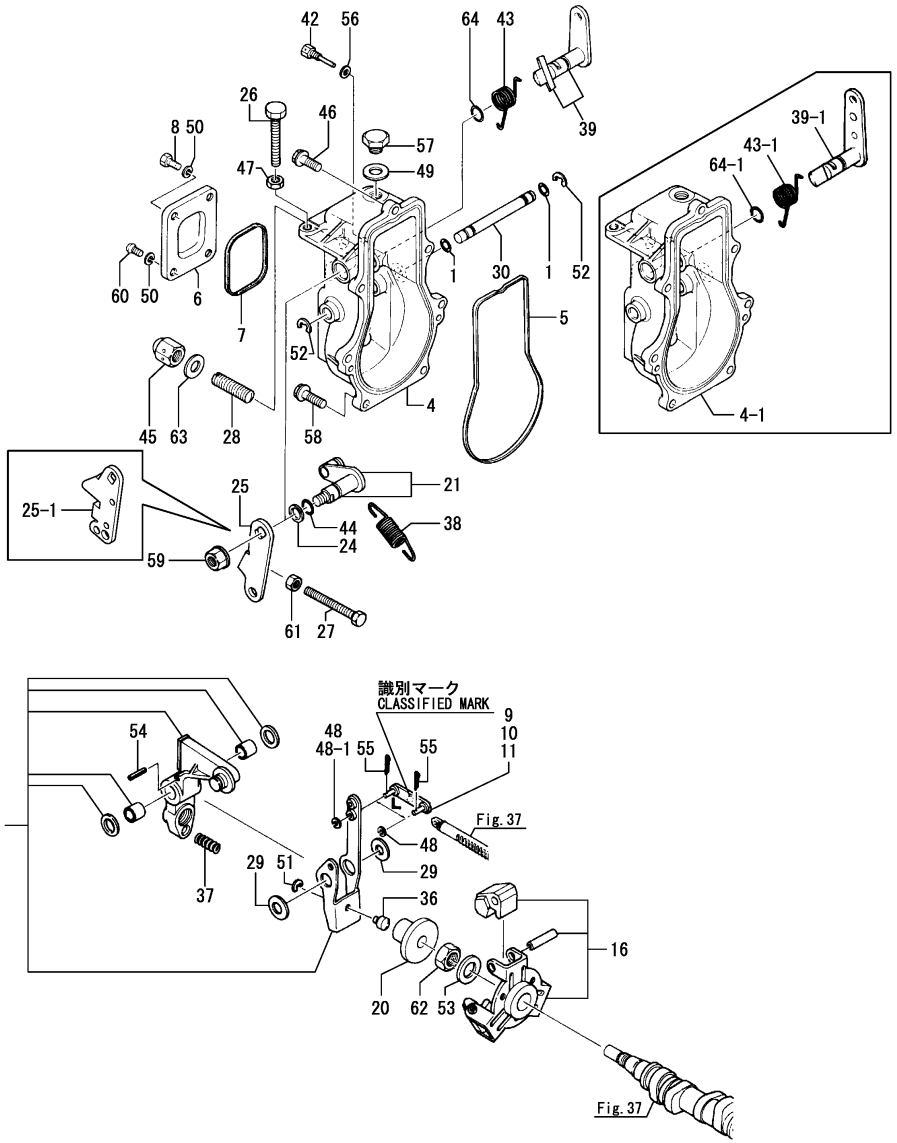

No.	Lev.	Parts No.	Description	Q'ty (A)	(B)	(C)	(D)	(E)	(F)	I	R
	(A=*1991.02)	(B=*1991.02)									
56	2	22190-060002	WASHER, SEAL 6	1	1						
57	2	23887-100002	PLUG, 10	1	1						
58	2	26106-060202	BOLT, M6X 20 PLATED	6	6						
59	2	26366-080002	NUT, M8	1	1						
60	2	26557-050102	SCREW, M5X10	3	3						
61	2	26757-060002	NUT, LOCK M6	1	1						
62	2	26776-120002	NUT, LOCK M12	1	1						
63	2	23414-100014	GASKET, 10X1.0	1	1						
64	2	24311-000080	O-RING, 1AP8.0	1	1						
64-1	2	24311-240100	O-RING, 1AP10A	1	1					S	2
	(A=*1988.09)	(B=*1988.09)									

Remarks
(1)Certain the classification mark, then place your order(Refer to illustration).
(2)Interchangeable by simultaneous replacement with No.4-1, 39-1, 43-1 & 64-1.

N:Old ←Yes/No→ New, Q:Old ←No/Yes→ New, R:Old ←Yes/Yes→ New, S:Old ←No/No→ New, W:Add, Z:Discontinued, F:Interchangeable by set, K:Q'ty Change

Copyright (C) 2014 YANMAR CO., LTD. All RightsReserved.

Fig.93. (44A)GOVERNOR(FROM JAN., 1992)

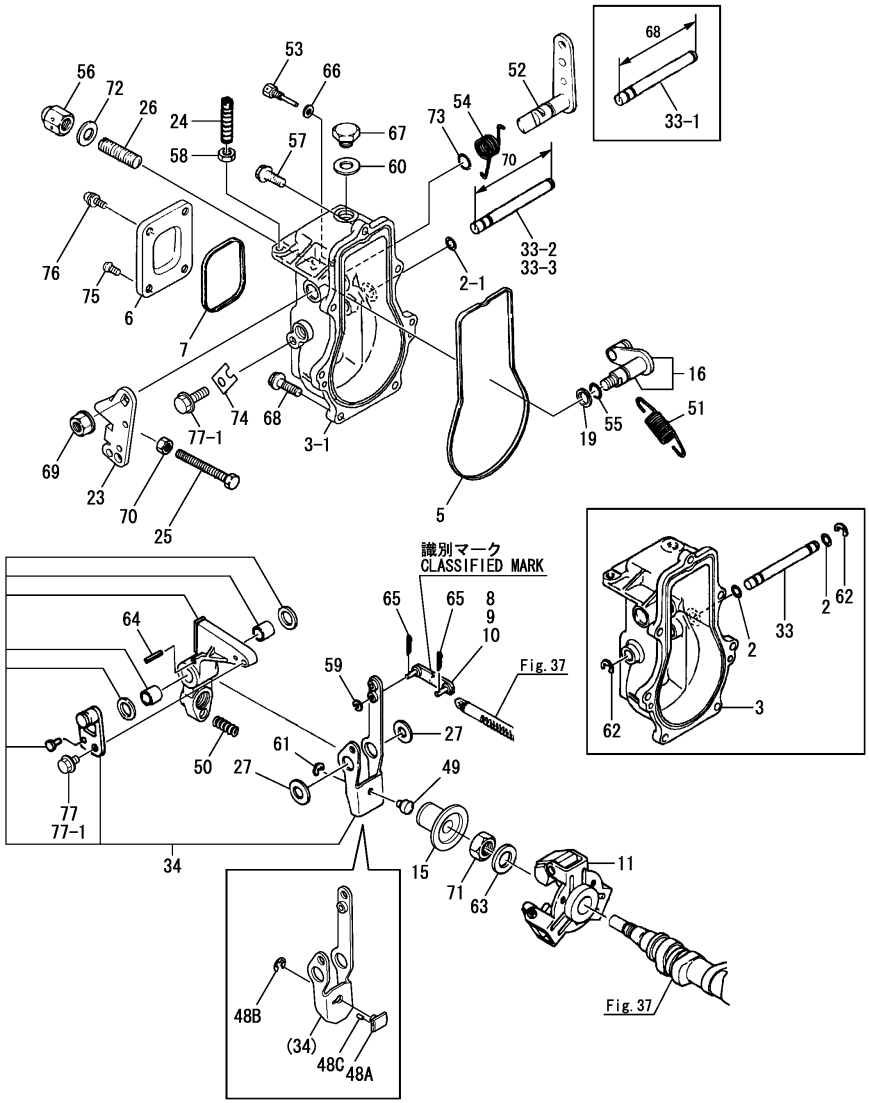

(A)=3JH25A (D)=
(B)=3JH30A (E)=
(C)= (F)=

No.	Lev.	Parts No.	Description	Q'ty (A)	(B)	(C)	(D)	(E)	(F)	I	R
2	3	129155-51280	O-RING, S6	2	2						
2-1	3	129155-51280	O-RING, S6	1	1					K	
	(A=*1996.08)	(B=*1996.08)									
3	3	129155-61012	CASE, GOVERNOR	1	1					W	
	(A=*1991.12)	(B=*1991.12)									
3-1	3	129155-61013	CASE, GOVERNOR	1	1					S	
	(A=*1996.08)	(B=*1996.08)									
5	3	129155-61050	GASKET	1	1						
5-1	3	129155-61051	GASKET	1	1					N	
	(A=E00155)	(B=E00160)									
6	3	129155-61060	COVER, GOVERNOR CASE	1	1						
7	3	129155-61070	GASKET	1	1						
7-1	3	129155-61071	GASKET	1	1					N	
	(A=E00155)	(B=E00160)									
8	3	129155-61120	LINK, L=30 MARK 0	1	1						1
9	3	129155-61130	LINK, L=31 MARK 1	1	1						1
10	3	129155-61140	LINK, L=30.5 MARK 05	1	1						1
11	3	129595-61200	WEIGHT ASSY,GOVERNOR	1	1						
11-1	3	129595-61201	WEIGHT ASSY,GOVERNOR	1	1					R	
	(A=*1999.11)	(B=*1999.11)									
15	3	129155-61341	SLEEVE	1	1						
15-1	3	129155-61350	SLEEVE, L=24.9	1	1					R	
	(A=E07882)	(B=E07873)									
16	3	129155-61400	SHAFT ASSY	1	1						
19	3	129155-61430	SHIM, SHAFT	1	1						
23	3	129499-61440	LEVER, CONTROL	1	1						
24	3	129155-61450	BOLT, LIMITING	1	1						
25	3	129155-61460	BOLT, LIMITING	1	1						
26	3	129155-61470	BOLT, FO CONTROL	1	1						
26-1	3	120323-61470	BOLT, CONTROL	1	1					N	
	(A=E05485)	(B=E05484)									
27	3	129155-61480	SHIM ASSY	2	2						
33	3	129155-61490	SHAFT	1	1						
33-1	3	129155-61380	SHAFT	1	1					S	
	(A=*1996.08)	(B=*1996.08)									
33-2	3	119660-61491	SHAFT,GOVERNOR LEVER	1	1					S	
	(A=*1997.03)	(B=*1997.03)									
33-3	3	119660-61590	SHAFT	1	1					N	
	(A=*2000.04)	(B=*2000.04)									
34	3	129155-61500	LEVER ASSY, GOVERNOR	1	1						
34-1	3	129190-61500	LEVER ASSY, GOVERNOR	1	1					R	
	(A=*1997.08)	(B=*1997.08)									
48A	4	129100-61540	SHIFTER	1	1					W	
	(A=E06930)	(B=E06929)									
48B	3	22272-000040	RING, E- 4	1	1					W	
	(A=E06930)	(B=E06929)									
48C	4	22351-020004	PIN, SPRING 2.0X 4	1	1					W	
	(A=E06930)	(B=E06929)									
49	3	129155-61540	SHIFTER	1	1					Z	
	(A=*2010.05)	(B=*2010.05)									
50	3	129470-61650	SPRING, FUEL CONTROL	1	1						

N:Old $\xleftarrow[\text{No}]{\text{Yes}}$ New, Q:Old $\xleftarrow[\text{Yes}]{\text{No}}$ New, R:Old $\xleftarrow[\text{Yes}]{\text{Yes}}$ New, S:Old $\xleftarrow[\text{No}]{\text{No}}$ New, W:Add, Z:Discontinued, F:Interchangeable by set, K:Q'ty Change

Remarks
(1)Certain the classification mark, then place your order(Refer to illustration).

++ CONTINUE ++

Copyright (C) 2014 YANMAR CO., LTD. All RightsReserved.

Fig.93. (44A)GOVERNOR(FROM JAN., 1992)

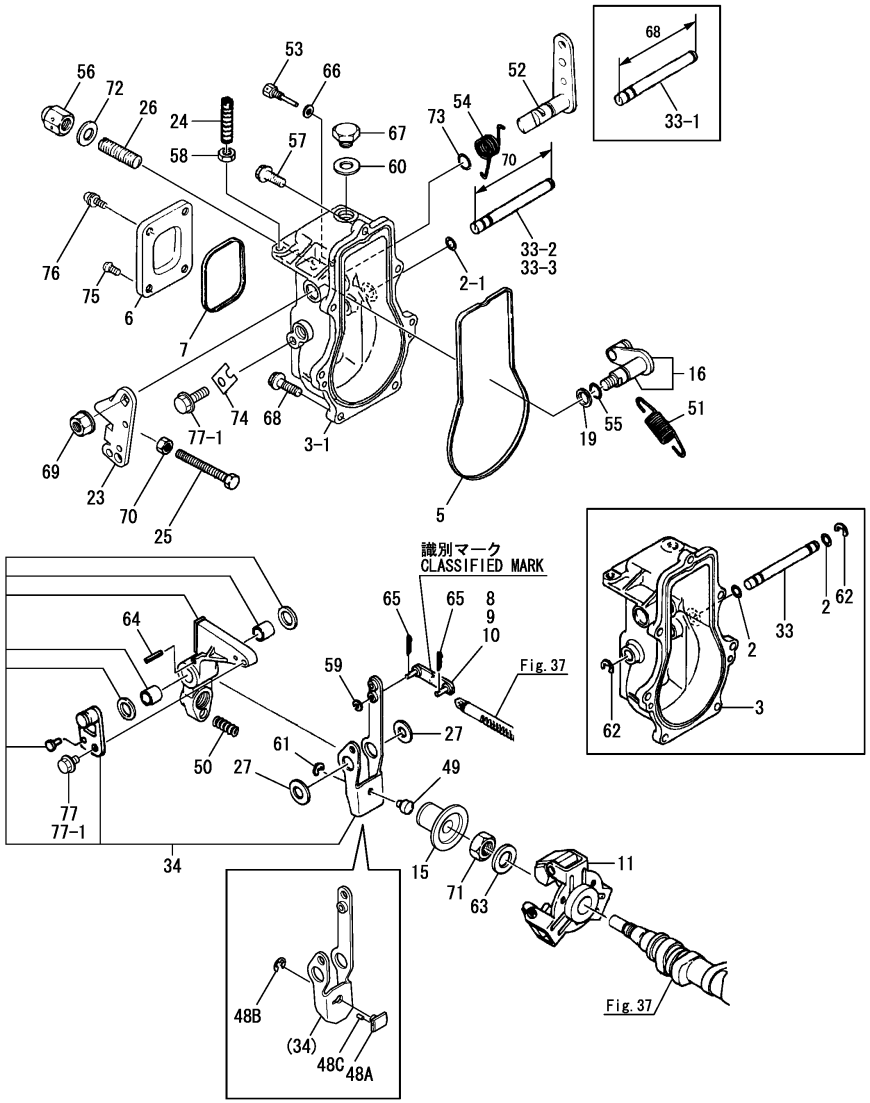

(A)=3JH25A (D)=
(B)=3JH30A (E)=
(C)= (F)=

No.	Lev.	Parts No.	Description	Q'ty (A)	(B)	(C)	(D)	(E)	(F)	I	R
51	3	129198-61700	SPRING, GOVERNOR	1	1						
52	3	129473-61801	LEVER, STOP	1	1						
53	3	129155-61810	PIN	1	1						
54	3	129100-61821	SPRING, RETURN	1	1						
55	3	129155-61830	O-RING, S10	1	1						
56	3	129100-61930	NUT, CAP	1	1						
57	3	129155-61950	BOLT	1	1						
58	3	124550-66370	NUT, M6	1	1						
59	3	22117-040000	WASHER, 4	1	1						
60	3	22190-100002	WASHER, SEAL 10	1	1						
61	3	22272-000040	RING, E- 4	1	1					Z	
	(A=E06930)		(B=E06929)								
62	3	22272-000060	RING, E- 6	2	2					Z	
	(A=*1996.08)		(B=*1996.08)								
63	3	22287-120000	WASHER, 12	1	1						
64	3	22351-030016	PIN, SPRING 3.0X16	1	1						
65	3	22372-040000	PIN, SNAP 4	2	2						
66	3	22190-060002	WASHER, SEAL 6	1	1						
66-1	3	22190-060003	SEAL WASER 6	1	1					R	
	(A=*1998.07)		(B=*1998.07)								
67	3	23887-100002	PLUG, 10	1	1						
68	3	26106-060202	BOLT, M6X 20 PLATED	6	6						
69	3	26366-080002	NUT, M8	1	1						
70	3	26756-060002	NUT, LOCK M6	1	1						
71	3	26776-120002	NUT, LOCK M12	1	1						
72	3	23414-100014	GASKET, 10X1.0	1	1						
73	3	24311-240100	O-RING, 1AP10A	1	1						
74	3	119660-61901	STOPPER, SHAFT	1	1					W	
	(A=*1996.08)		(B=*1996.08)								
75	3	26022-050102	SCREW, M5X10	2	2						
76	3	26023-050102	SCREW, M5X10	2	2						
77	3	26106-060102	BOLT, M6X 10 PLATED	1	1						
77-1	3	26106-060102	BOLT, M6X 10 PLATED	2	2					K	
	(A=*1996.08)		(B=*1996.08)								

Remarks
(1)Certain the classification mark, then place your order(Refer to illustration).

N:Old $\xleftarrow[\text{No}]{\text{Yes}}$ New, Q:Old $\xleftarrow[\text{Yes}]{\text{No}}$ New, R:Old $\xleftarrow[\text{Yes}]{\text{Yes}}$ New, S:Old $\xleftarrow[\text{No}]{\text{No}}$ New, W:Add, Z:Discontinued, F:Interchangeable by set, K:Q'ty Change

Copyright (C) 2014 YANMAR CO., LTD. All RightsReserved.

Fig.45. ENGINE STOP DEVICE

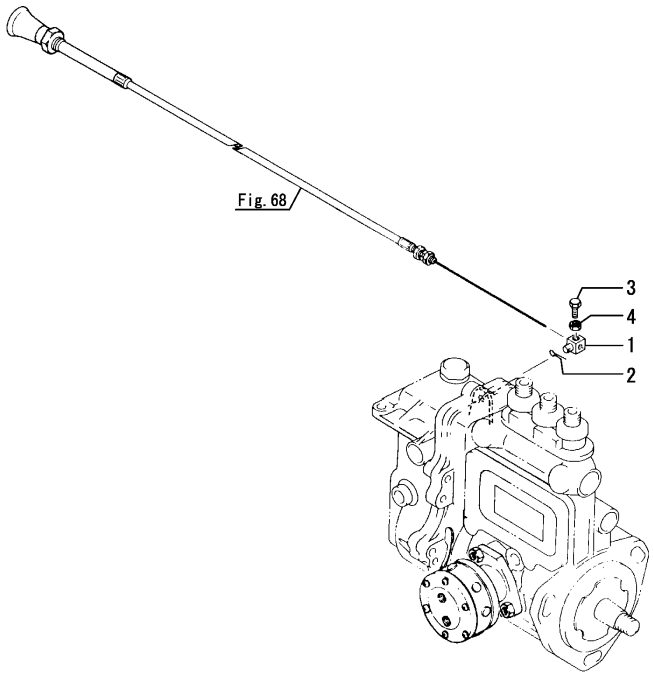

(A)=3JH25A (D)=
(B)=3JH30A (E)=
(C)= (F)=

No.	Lev.	Parts No.	Description	Q'ty (A)	(B)	(C)	(D)	(E)	(F)	I	R
1	1	129795-67310	RETAINER	1	1						
1-1	1	129590-67310	RETAINER	1	1					R	
	(A=*1987.08)	(B=*1987.08)									
2	1	22414-250150	PIN, COTTER 2.5X15	1	1						
3	1	26116-050142	BOLT, M5X 14 PLATED	1	1						
4	1	26756-050002	NUT, LOCK M5	1	1						

N:Old $\xleftrightarrow[\text{No}]{\text{Yes}}$ New, Q:Old $\xleftrightarrow[\text{Yes}]{\text{No}}$ New, R:Old $\xleftrightarrow[\text{Yes}]{\text{Yes}}$ New, S:Old $\xleftrightarrow[\text{No}]{\text{No}}$ New, W:Add, Z:Discontinued, F:Interchangeable by set, K:Q'ty Change

Copyright (C) 2014 YANMAR CO., LTD. All RightsReserved.

Fig.46. SPEED REMOTE CONTROL DEVICE

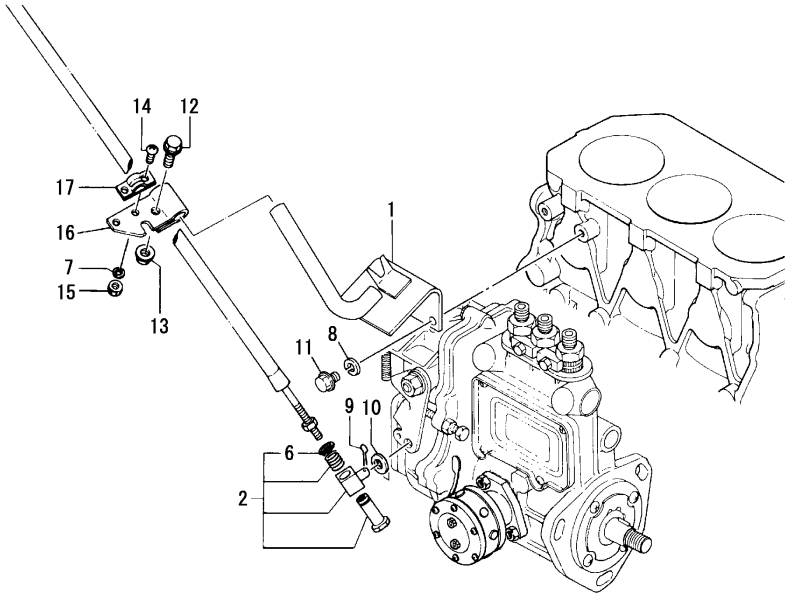

(A)=3JH25A (D)=
(B)=3JH30A (E)=
(C)= (F)=

No.	Lev.	Parts No.	Description	Q'ty (A)	(B)	(C)	(D)	(E)	(F)	I	R
1	1	129170-67100	BRACKET, GOVERNOR	1	1						
2	1	129470-67200	RETAINER ASSY	1	1						
6	2	22242-000100	RING, 10	1	1						
7	1	22217-050000	WASHER, SPRING 5	2	2						
8	1	22217-080000	WASHER, SPRING 8	2	2						
9	1	22414-250150	PIN, COTTER 2.5X15	1	1						
10	1	23414-080000	GASKET, 8X1.0	1	1						
11	1	26106-080122	BOLT, M8X 12 PLATED	2	2						
12	1	26106-080252	BOLT, M8X 25 PLATED	1	1						
13	1	26366-080002	NUT, M8	1	1						
13-1	1	26306-080002	NUT, M8	1	1					R	
	(A=*2001.04)	(B=*2001.04)									
14	1	26557-050122	SCREW, M5X12	2	2						
15	1	26716-050002	NUT, M5	2	2						
16	1	41701-001720	BRACKET	1	1						
17	1	41710-000410	CLAMP	1	1						

N:Old $\overset{\text{Yes}}{\underset{\text{No}}{\leftrightarrows}}$ New, Q:Old $\overset{\text{No}}{\underset{\text{Yes}}{\leftrightarrows}}$ New, R:Old $\overset{\text{Yes}}{\underset{\text{Yes}}{\leftrightarrows}}$ New, S:Old $\overset{\text{No}}{\underset{\text{No}}{\leftrightarrows}}$ New, W:Add, Z:Discontinued, F:Interchangeable by set, K:Q'ty Change

Copyright (C) 2014 YANMAR CO., LTD. All RightsReserved.

Fig.47. STARTING MOTOR

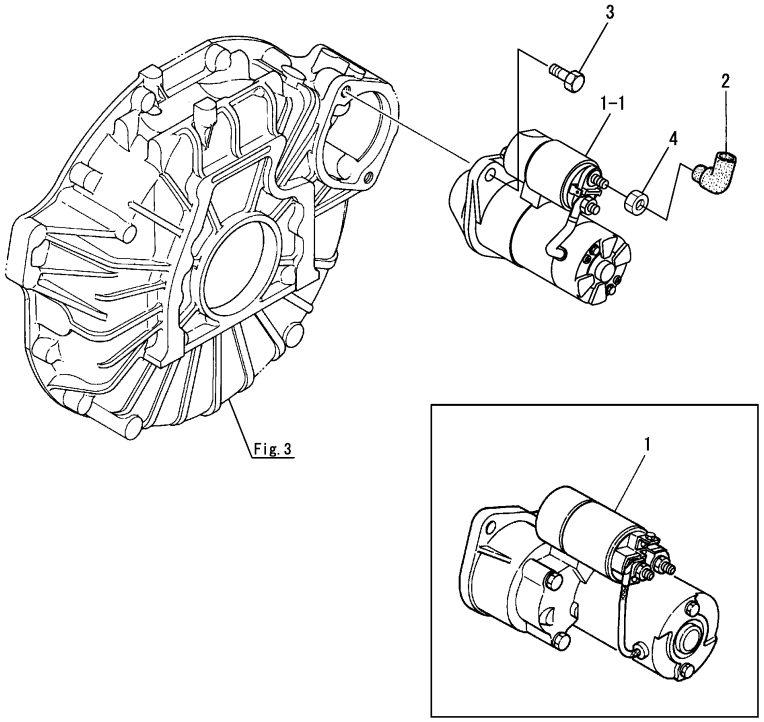

(A)=3JH25A (D)=
(B)=3JH30A (E)=
(C)= (F)=

No.	Lev.	Parts No.	Description	Q'ty (A)	(B)	(C)	(D)	(E)	(F)	I	R
1	1	171008-77010	STARTER ASSY	1	1						1
1-1	1	129608-77010	STARTER ASSY	1	1					N	2
	(A=E03391)	(B=E03391)									
2	1	124550-77030	COVER, TERMINAL	1	1						
3	1	26116-120302	BOLT, M12X 30 PLATED	2	2						
4	1	26756-080002	NUT, LOCK M8	1	1					W	
	(A=E00106)	(B=E00111)									

Remarks
(1)Inner parts are shown in Fig.55(47A).
(2)Inner parts are shown in Fig.89(47B).

N:Old $\xleftrightarrow[\text{No}]{\text{Yes}}$ New, Q:Old $\xleftrightarrow[\text{Yes}]{\text{No}}$ New, R:Old $\xleftrightarrow[\text{Yes}]{\text{Yes}}$ New, S:Old $\xleftrightarrow[\text{No}]{\text{No}}$ New, W:Add, Z:Discontinued, F:Interchangeable by set, K:Q'ty Change

Copyright (C) 2014 YANMAR CO., LTD. All RightsReserved.

Fig.55. (47A)STARTING MOTOR INNER PARTS

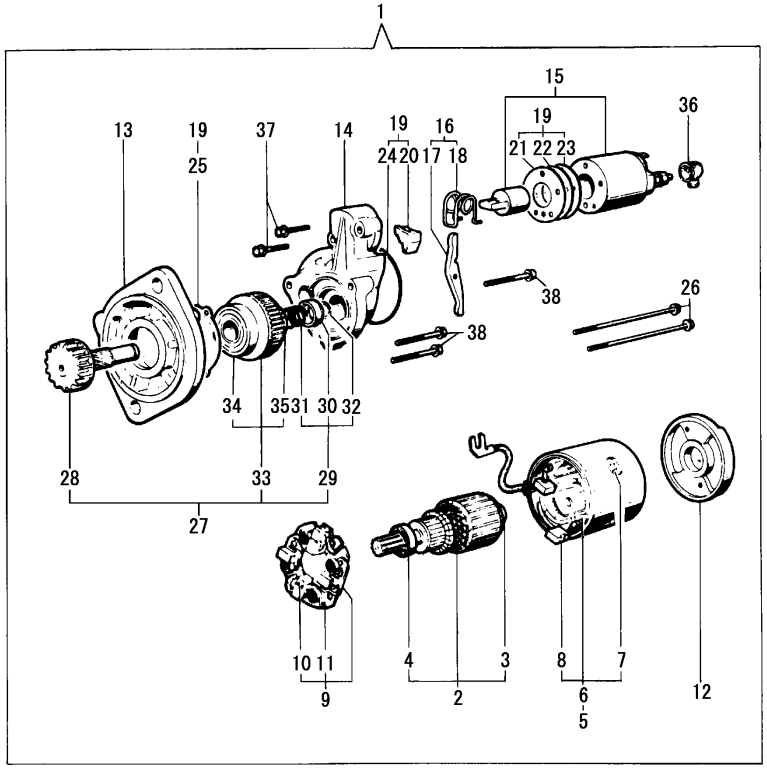

(A)=3JH25A (D)=
(B)=3JH30A (E)=
(C)= (F)=

No.	Lev.	Parts No.	Description	Q'ty (A)	(B)	(C)	(D)	(E)	(F)	I	R
1	1	171008-77010	STARTER ASSY	1	1					Z	
	(A=E03391)	(B=E03391)									
2	2	171008-77400	ARMATURE ASSY	1	1						
3	3	171008-77410	BEARING, BALL	1	1						
4	3	171008-77420	BEARING, BALL	1	1						
5	2	171008-77430	YOKE ASSY	1	1						
6	3	171008-77440	COIL ASSY, FIELD	1	1						
7	4	171008-77450	SCREW, CORE SET	4	4						
8	4	171008-77460	BRUSH (+)	2	2						
9	2	171008-77470	HOLDER ASSY, BRUSH	1	1						
10	3	171008-77480	BRUSH (-)	2	2						
11	3	171008-77490	SPRING, BRUSH	4	4						
12	2	171008-77500	COVER, REAR	1	1						
13	2	171008-77510	CASE, GEAR	1	1						
14	2	171008-77520	HOUSING, CENTER	1	1						
15	2	171008-77530	SWITCH, MAGNETIC	1	1						
16	2	171008-77540	LEVER SET	1	1						
17	3	171008-77550	LEVER, SHIFT	1	1						
18	3	171008-77560	SPRING, RETURN	1	1						
19	2	171008-77570	COVER KIT, DUST	1	1						
20	3	171008-77580	COVER (A,DUST	1	1						
21	3	171008-77590	COVER (B,DUST	1	1						
22	3	171008-77600	COVER (C,DUST	1	1						
23	3	171008-77610	COVER (D,DUST	1	1						
24	3	171008-77620	COVER (E,DUST	1	1						
25	3	171008-77630	COVER (F,DUST	1	1						
26	2	171008-77640	BOLT, THROUGH	2	2						
27	2	171008-77650	PINION ASSY,W/CLUTCH	1	1						
28	3	171008-77660	SHAFT, PINION	1	1						
29	3	171008-77670	STOPPER SET, PINION	1	1						
30	4	171008-77680	STOPPER	1	1						
31	4	171008-77690	SPRING, RETURN	1	1						
32	4	171008-77700	CLIP	1	1						
33	3	171008-77720	CLUTCH ASSY	1	1						
34	4	171008-77730	BEARING, BALL	1	1						
35	4	171008-77740	BEARING, BALL	1	1						
36	2	171008-77750	COVER, TERMINAL	1	1						
37	2	26106-060322	BOLT, M6X 32 PLATED	2	2						
38	2	26106-060402	BOLT, M6X 40 PLATED	3	3						

N:Old $\overset{\text{Yes}}{\underset{\text{No}}{\leftrightarrows}}$ New, Q:Old $\overset{\text{No}}{\underset{\text{Yes}}{\leftrightarrows}}$ New, R:Old $\overset{\text{Yes}}{\underset{\text{Yes}}{\leftrightarrows}}$ New, S:Old $\overset{\text{No}}{\underset{\text{No}}{\leftrightarrows}}$ New, W:Add, Z:Discontinued, F:Interchangeable by set, K:Q'ty Change

Copyright (C) 2014 YANMAR CO., LTD. All RightsReserved.

Fig.89. (47B)STARTING MOTOR INNER PARTS

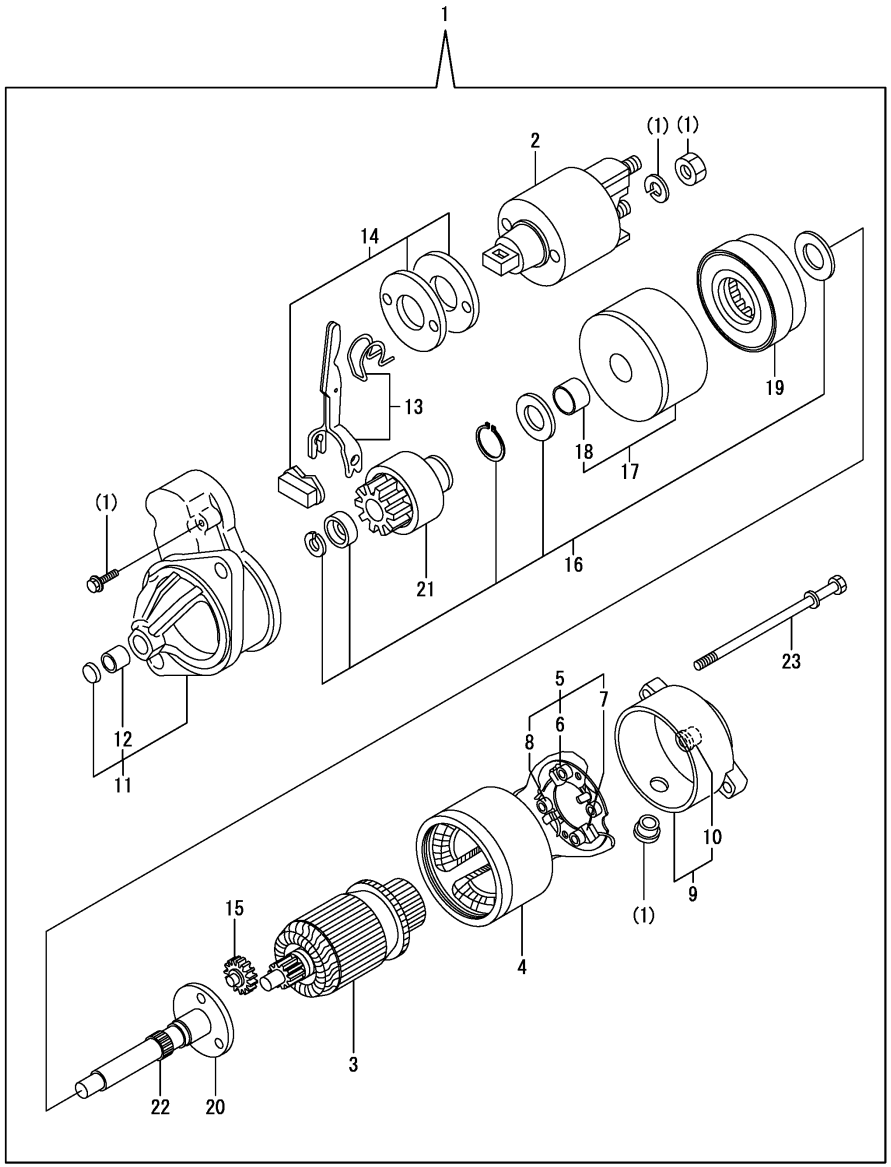

(A)=3JH25A (D)=
(B)=3JH30A (E)=
(C)= (F)=

No.	Lev.	Parts No.	Description	Q'ty (A)	(B)	(C)	(D)	(E)	(F)	I	R
1	1	129608-77010	STARTER ASSY	1	1					W	
	(A=E03391)	(B=E03391)									
2	2	129698-77020	SWITCH ASSY, MAGNET	1	1						
3	2	129698-77101	ARMATURE ASSY	1	1						
4	2	129608-77110	YOKE ASSY	1	1						
5	2	129698-77120	HOLDER ASSY, BRUSH	1	1						
6	3	129698-77140	BRUSH SET	1	1						
7	3	129698-77130	BRUSH	2	2						
8	3	129698-77150	SPRING, BRUSH	4	4						
9	2	129698-77161	COVER ASSY	1	1						
10	3	129698-77170	BEARING, COVER	1	1						
11	2	129698-77260	CASE ASSY, GEAR	1	1						
12	3	X2114535200	BEARING, STARTER	1	1						
13	2	129698-77270	LEVER SET, SHIFT	1	1						
14	2	129698-77280	COVER KIT, DUST	1	1						
15	2	129698-77240	GEAR, PLANETARY	3	3						
16	2	129698-77250	WASHER SET	1	1						
17	2	129698-77180	BRACKET, CENTER	1	1						
18	3	129698-77190	BRACKET, CENTER	1	1						
19	2	129698-77200	GEAR, INTERNAL	1	1						
20	2	129698-77210	BRACKET	1	1						
21	2	129698-77220	PINION ASSY	1	1						
22	2	129698-77230	SHAFT, PINION	1	1						
23	2	124195-77770	BOLT, THROUGH	2	2						

N:Old $\xleftrightarrow[\text{No}]{\text{Yes}}$ New, Q:Old $\xleftrightarrow[\text{Yes}]{\text{No}}$ New, R:Old $\xleftrightarrow[\text{Yes}]{\text{Yes}}$ New, S:Old $\xleftrightarrow[\text{No}]{\text{No}}$ New, W:Add, Z:Discontinued, F:Interchangeable by set, K:Q'ty Change

Copyright (C) 2014 YANMAR CO., LTD. All RightsReserved.

Fig.48. GENERATOR(HITACHI : TO JUNE, 2012)(12V-35A)

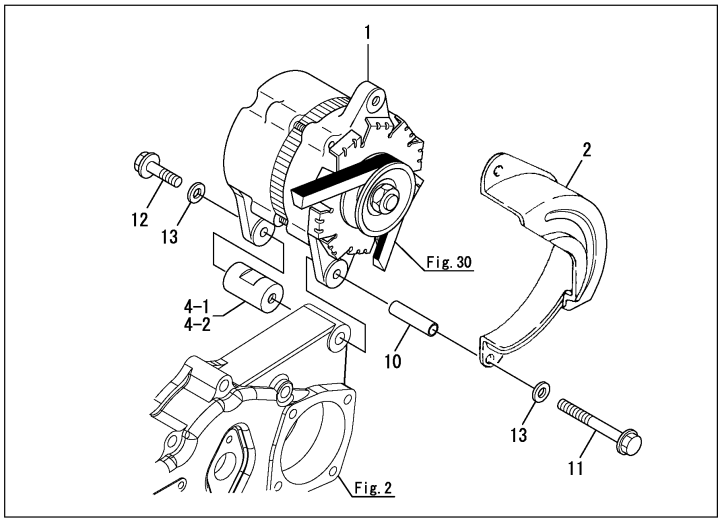

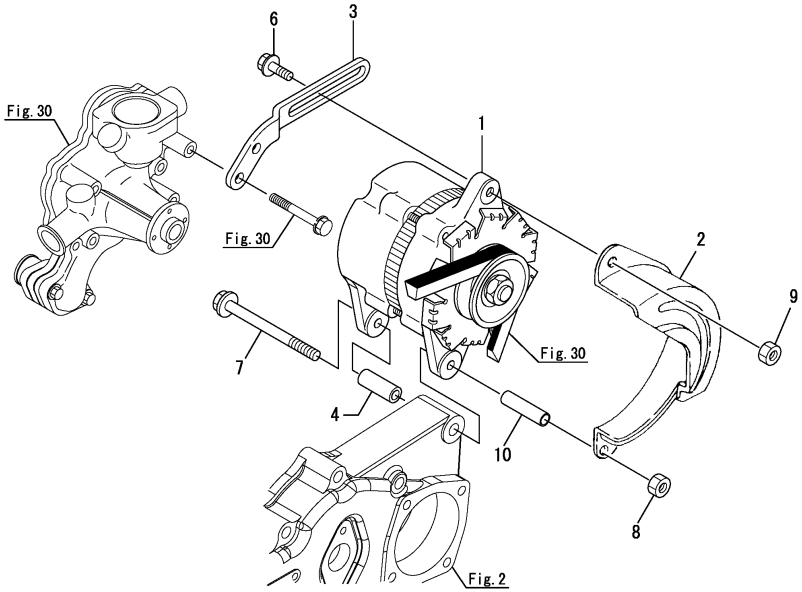

(A)=3JH25A (D)=
(B)=3JH30A (E)=
(C)= (F)=

No.	Lev.	Parts No.	Description	Q'ty (A)	(B)	(C)	(D)	(E)	(F)	I	R
1	1	128270-77200	GENERATOR, LR135-105	1	1					Z	1
	(A=E08566)	(B=E08566)									
2	1	129795-77210	COVER	1	1						
2-1	1	129693-77210	COVER	1	1					N	
	(A=*1996.02)	(B=*1996.02)									
3	1	129495-77330	ADJUSTER, BELT	1	1						
4	1	129470-77340	PIECE, DISTANCE	1	1						
4-1	1	129490-77340	PIECE, DISTANCE	1	1					N	
	(A=*1987.02)	(B=*1987.02)									
4-2	1	129695-77340	PIECE, DISTANCE	1	1					S	
	(A=E00106)	(B=E00111)									
6	1	26106-080352	BOLT, M8X 35 PLATED	1	1						
7	1	26106-081202	BOLT, M8X120 PLATED	1	1					Z	
	(A=E00106)	(B=E00111)									
8	1	26716-080002	NUT, M8	1	1					Z	
	(A=E00106)	(B=E00111)									
9	1	26716-080002	NUT, M8	1	1						
10	1	129693-77350	SPACER	1	1					W	
	(A=*1997.03)	(B=*1997.03)									
11	1	129695-77350	BOLT, M8X75	1	1					W	
	(A=E00106)	(B=E00111)									
12	1	129695-77360	BOLT, M8X30	1	1					W	
	(A=E00106)	(B=E00111)									
13	1	22137-080000	WASHER, 8	2	2					W	
	(A=E00106)	(B=E00111)									

Remarks
* This item is applicable to [(A)(B)=E0856] or previous machines [Refer to Fig.90(48B)].
(1)Refer to Fig.56 for the component parts.

N:Old $\xleftarrow[\text{No}]{\text{Yes}}$ New, Q:Old $\xleftarrow[\text{Yes}]{\text{No}}$ New, R:Old $\xleftrightarrow[\text{Yes}]{\text{Yes}}$ New, S:Old $\xleftrightarrow[\text{No}]{\text{No}}$ New, W:Add, Z:Discontinued, F:Interchangeable by set, K:Q'ty Change

Copyright (C) 2014 YANMAR CO., LTD. All RightsReserved.

Fig.94. (48A)GENERATOR(HITACHI : TO JUNE, 1992)(12V-60A)

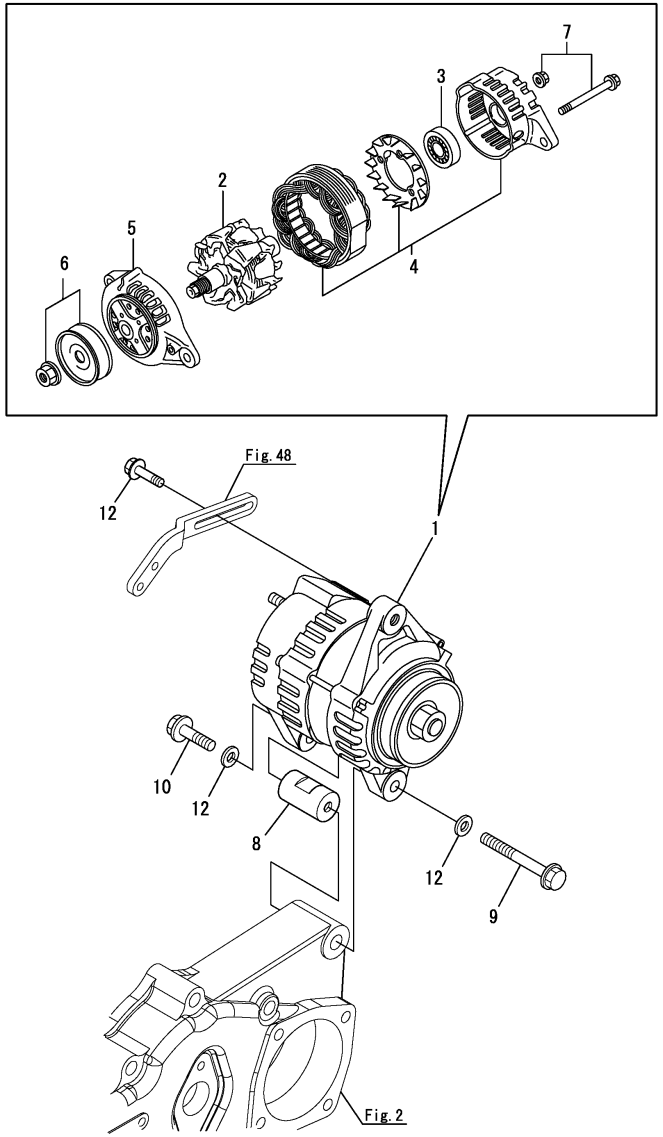

(A)=3JH25A (D)=
(B)=3JH30A (E)=
(C)= (F)=

No.	Lev.	Parts No.	Description	Q'ty (A)	(B)	(C)	(D)	(E)	(F)	I	R
1	1	128271-77200	GENERATOR, 12V-60A	1	1					W	
	(A=E07726)	(B=E07716)									
1-1	1	128271-77200	GENERATOR, 12V-60A	1	1					Z	
	(A=E08567)	(B=E08562)									
2	2	123900-77700	ROTOR ASSY	1	1						
3	2	129900-77810	BEARING, BALL	1	1						
4	2	128271-77730	BRACKET(STATOR+REGUL	1	1						
5	2	123900-77730	BRACKET ASSY	1	1						
6	2	128271-77740	PULLEY	1	1						
7	2	128271-77750	SCREW KIT	1	1						
8	1	129670-77340	PIECE, DISTANCE	1	1						
9	1	129695-77371	BOLT, M10X70	1	1						
10	1	129695-77380	BOLT, M10X30	1	1						
12	1	26106-080252	BOLT, M8X 25 PLATED	1	1						

Remarks
* This item is applicable to [(A)(B)=June, 2012] or previous machines [Refer to Fig.90(48B)].

N:Old $\overset{\text{Yes}}{\underset{\text{No}}{\leftrightarrow}}$ New, Q:Old $\overset{\text{No}}{\underset{\text{Yes}}{\leftrightarrow}}$ New, R:Old $\overset{\text{Yes}}{\underset{\text{Yes}}{\leftrightarrow}}$ New, S:Old $\overset{\text{No}}{\underset{\text{No}}{\leftrightarrow}}$ New, W:Add, Z:Discontinued, F:Interchangeable by set, K:Q'ty Change

Copyright (C) 2014 YANMAR CO., LTD. All RightsReserved.

Fig.56. (48C)GENERATOR INNER PARTS(HITACHI 12V-35A : TO JUNE, 2012)

(A)=3JH25A
(B)=3JH30A
(C)=
(D)=
(E)=
(F)=

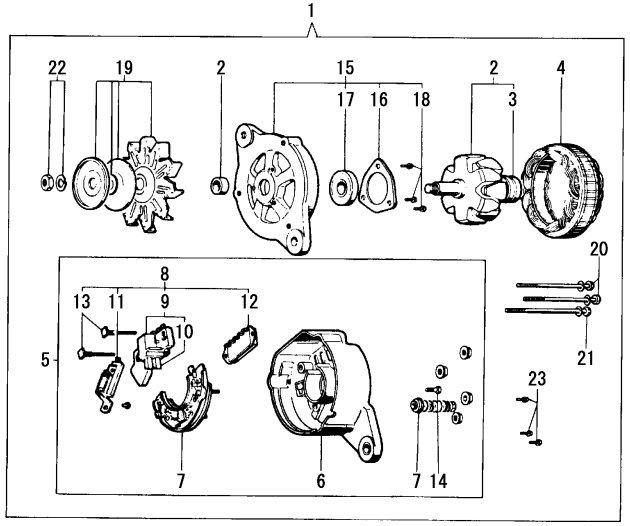

No.	Lev.	Parts No.	Description	Q'ty (A)	(B)	(C)	(D)	(E)	(F)	I	R
1	1	128270-77200	GENERATOR, LR135-105	1	1					Z	
	(A=E08566)	(B=E08566)									
2	2	XL13561001	ROTOR ASSY	1	1						
3	3	X6201SD	BALL BEARING	1	1						
4	2	XL13542001	STATER ASSY	1	1						
5	2	XL13563003	COVER ASSY	1	1						
6	3	XL1358301	COVER	1	1						
7	3	XL1353320	DIODE ASSY	1	1						
8	3	XL13513152	BRUSH REGULATOR(W/CO	1	1						
9	4	XL1354326	BRUSH, CARBON	1	1						
10	5	XL12013262	BRUSH	2	2						
11	4	XL1352318	CONDENSER ASSY	1	1						
12	4	XTR1Z63	REGULATOR	1	1						
13	4	XL13513134	BOLT M5	2	2						
14	3	26557-050142	SCREW M 5X 14	1	1						
15	2	XL1359400	COVER ASSY, FRONT	1	1						
16	3	XL13514042	RETAINER	1	1						
17	3	X6302BM	BALL BEARING	1	1						
18	3	26557-040122	SCREW, M4X12	3	3						
19	2	XL13525001	PULLEY ASSY	1	1						
20	2	XL1254801	BOLT, THROUGH	2	2						
21	2	XL1255801	BOLT, THROUGH	1	1						
22	2	XB495469B	NUT ASSY, PULLEY	1	1						
23	2	XL12010001	SCREW KIT	1	1						

Remarks
* This item is applicable to [(A)(B)=E0856] or previous machines [Refer to Fig.90(48B)].

N:Old $\overset{\text{Yes}}{\underset{\text{No}}{\leftrightarrows}}$ New, Q:Old $\overset{\text{No}}{\underset{\text{Yes}}{\leftrightarrows}}$ New, R:Old $\overset{\text{Yes}}{\underset{\text{Yes}}{\leftrightarrows}}$ New, S:Old $\overset{\text{No}}{\underset{\text{No}}{\leftrightarrows}}$ New, W:Add, Z:Discontinued, F:Interchangeable by set, K:Q'ty Change

Copyright (C) 2014 YANMAR CO., LTD. All RightsReserved.

Fig.90. (48B)GENERATOR(DENSO:FROM JULY, 2012)(12V-55A)

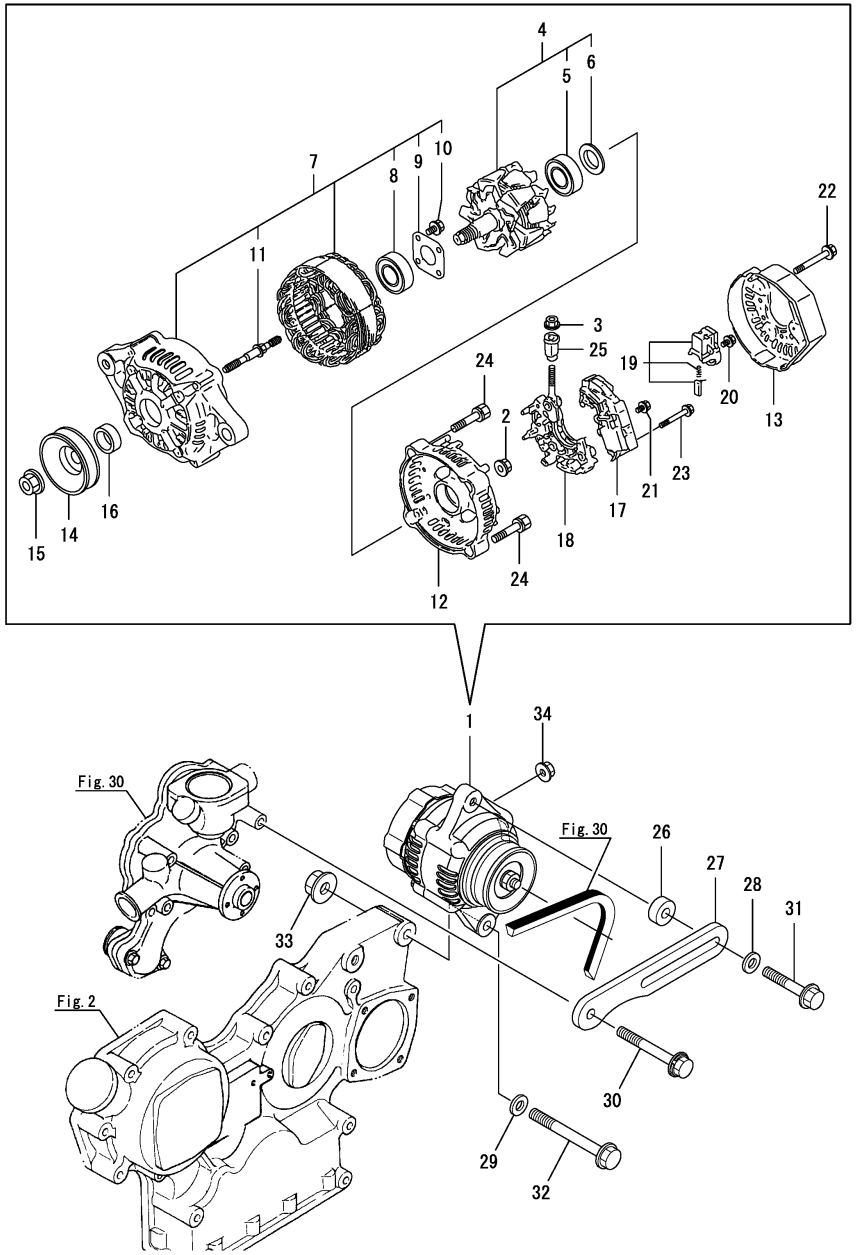

(A)=3JH25A (D)=
(B)=3JH30A (E)=
(C)= (F)=

No.	Lev.	Parts No.	Description	Q'ty (A)	(B)	(C)	(D)	(E)	(F)	I	R
1	1	119626-77210	ALTERNATOR, 12V-55A	1	1					W	
	(A=E08567)	(B=E08567)									
2	2	119620-79350	NUT	2	2						
3	2	X9490561001	NUT	1	1						
4	2	129052-77380	ROTOR ASSY	1	1						
5	3	123501-79240	BEARING, BALL	1	1						
6	3	119620-79250	COVER, BEARING	1	1						
7	2	129052-77422	FRAME ASSY	1	1						
8	3	119620-79200	BEARING, BALL	1	1						
9	3	119620-79210	RETAINER	1	1						
10	3	119620-79220	SCREW	4	4						
11	3	119620-79230	BOLT, STUD	2	2						
12	2	128401-77440	COVER	1	1						
13	2	119626-77450	FRAME	1	1						
14	2	119620-77461	PULLEY, GENERATOR	1	1						
15	2	119620-77471	NUT	1	1						
16	2	119620-77490	COLLAR	1	1						
17	2	129423-77710	REGULATOR ASSY	1	1						
18	2	129052-79260	HOLDER	1	1						
19	2	129052-79270	HOLDER, BRUSH	1	1						
20	2	119620-79290	SCREW	6	6						
21	2	119620-79300	SCREW	1	1						
22	2	119620-79310	BOLT	3	3						
23	2	119620-79320	SCREW	2	2						
24	2	119620-79330	BOLT	2	2						
25	2	119620-79340	BUSH, INSULATION	1	1						
26	1	129198-77270	SPACER,ALTERNATOR	1	1						
27	1	119171-77330	ADJUSTER, BELT	1	1						
28	1	22137-080000	WASHER, 8	1	1						
29	1	22137-100000	WASHER, 10	1	1						
30	1	26014-080652	BOLT, M8X 65	1	1						
31	1	26106-080402	BOLT, M8X 40 PLATED	1	1						
32	1	26106-100752	BOLT, M10X 75 PLATED	1	1						
33	1	26306-100002	NUT, M10	1	1						
34	1	26366-060002	NUT, M6	1	1					W	
	(A=*2012.09)	(B=*2012.09)									

Remarks
* This item is applicable to [(A)(B)=E08567] or following machines [Refer to Fig.48, 94(48A)].

N:Old $\overset{\text{Yes}}{\underset{\text{No}}{\leftrightarrows}}$ New, Q:Old $\overset{\text{No}}{\underset{\text{Yes}}{\leftrightarrows}}$ New, R:Old $\overset{\text{Yes}}{\underset{\text{Yes}}{\leftrightarrows}}$ New, S:Old $\overset{\text{No}}{\underset{\text{No}}{\leftrightarrows}}$ New, W:Add, Z:Discontinued, F:Interchangeable by set, K:Q'ty Change

Copyright (C) 2014 YANMAR CO., LTD. All RightsReserved.

Fig.49. WIRE HARNESS & SENSOR

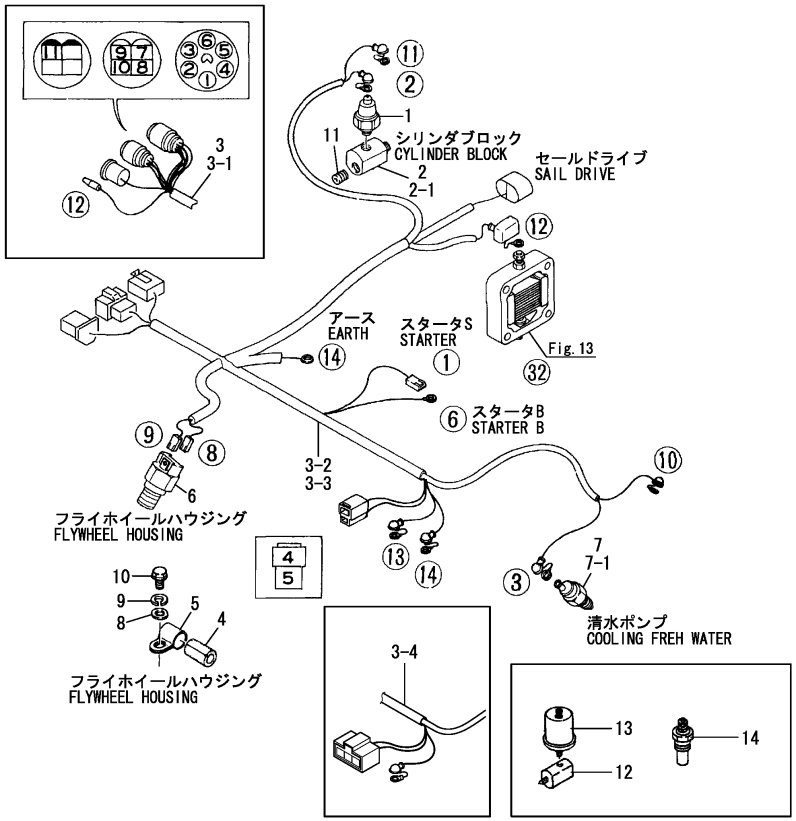

番号 No	線径 WIRE DIAMETER	線色 WIRE COLOR	番号 No	線径 WIRE DIAMETER	線色 WIRE COLOR
①	5.0	W : 白 WHITE	⑧	0.85	L/R : 青・赤 BLUE/RED
②	0.85	Y/W : 黄・白 YELLOW/WHITE	⑨	0.85	Or : 橙 ORANGE
③	0.85	W/L : 白・青 WHITE/BLUE	⑩	0.85	W/B : 白・黒 WHITE/BLACK
④	0.85	R/B : 赤・黒 RED/BLACK	⑪	0.85	Y/B : 黄・黒 YELLOW/BLACK
⑤	0.85	L/B : 青・黒 BLUE/BLACK	⑫	5.0	L : 青 BLUE
⑥	5.0	R : 赤 RED	⑬	5.0	R : 赤 RED
⑦	0.85	B : 黒 BLACK	⑭	5.0	B : 黒 BLACK

Remarks
(1)Support for DENSO Generator.
(2)Optional parts.

(A)=3JH25A (D)=
(B)=3JH30A (E)=
(C)= (F)=

No.	Lev.	Parts No.	Description	Q'ty (A)	(B)	(C)	(D)	(E)	(F)	I	R
1	1	124060-39451	SWITCH, 0.2KG	1	1						
1-1	1	124060-39452	SWITCH, 0.2KG	1	1					N	
	(A=*2000.02)	(B=*2000.02)									
1-2	1	121252-39450	SWITCH, HYDRAULIC	1	1					N	
	(A=E03855)	(B=E03865)									
2	1	129470-39600	DAMPER ASSY	1	1						
2-1	1	43580-500680	DAMPER ASSY, PT1/8	1	1					N	
	(A=E00554)	(B=E00306)									
2-2	1	129670-39600	DAMPER ASSY, R1/8	1	1					N	
	(A=E00106)	(B=E00111)									
3	1	129198-77930	HARNESS, WIRE	1	1						
3-1	1	129198-77931	HARNESS, WIRE	1	1					N	
	(A=E00538)	(B=E00300)									
3-2	1	129198-77932	HARNESS, WIRE	1	1					S	
	(A=E00630)	(B=E00383)									
3-3	1	129198-77933	HARNESS, WIRE	1	1					N	
	(A=*1999.08)	(B=*1999.08)									
3-4	1	129198-77934	HARNESS, WIRE	1	1					S	1
	(A=E08567)	(B=E08562)									
4	1	124770-77940	PROTECTOR	1	1						
5	1	124070-77950	CLAMP	1	1						
5-1	1	23297-180081	CLAMP, A18X 8	1	1					N	
	(A=*2007.11)	(B=*2007.11)									
6	1	128170-91160	SENSOR	1	1						
7	1	127610-91350	SWITCH, 95	1	1						
7-1	1	120130-91370	SWITCH, 100	1	1					S	
	(A=E00591)	(B=E00355)									
8	1	22137-080000	WASHER, 8	1	1						
9	1	22217-080000	WASHER, SPRING 8	1	1						
10	1	26106-080162	BOLT, M8X 16 PLATED	1	1						
11	1	23871-010000	PLUG, R01	1	1					W	
	(A=E00554)	(B=E00306)									
11-1	1	23871-010000	PLUG, R01	1	1					Z	
	(A=E00106)	(B=E00111)									
12	1	123482-39670	DAMPER CMP	1	1						2
13	1	119773-91501	SENSOR, PRESSURE	1	1						2
14	1	144626-91570	SENDER UNIT	1	1						2

N:Old $\xleftarrow[\text{No}]{\text{Yes}}$ New, Q:Old $\xleftarrow[\text{Yes}]{\text{No}}$ New, R:Old $\xleftarrow[\text{Yes}]{\text{Yes}}$ New, S:Old $\xleftarrow[\text{No}]{\text{No}}$ New, W:Add, Z:Discontinued, F:Interchangeable by set, K:Q'ty Change

Copyright (C) 2014 YANMAR CO., LTD. All RightsReserved.

Fig.50. BATTERY SWITCH(OPTIONAL)

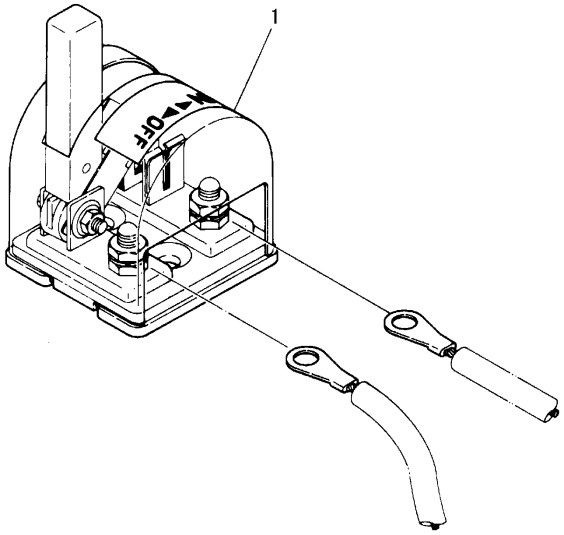

(A)=3JH25A
(B)=3JH30A
(C)=
(D)=
(E)=
(F)=

No.	Lev.	Parts No.	Description	Q'ty (A)	(B)	(C)	(D)	(E)	(F)	I	R
1	1	123310-77640	SWITCH, BATTERY	2	2						

N:Old ◄Yes/No► New, Q:Old ◄No/Yes► New, R:Old ◄Yes/Yes► New, S:Old ◄No/No► New, W:Add, Z:Discontinued, F:Interchangeable by set, K:Q'ty Change

Copyright (C) 2014 YANMAR CO., LTD. All RightsReserved.

Fig.51. CLUTCH

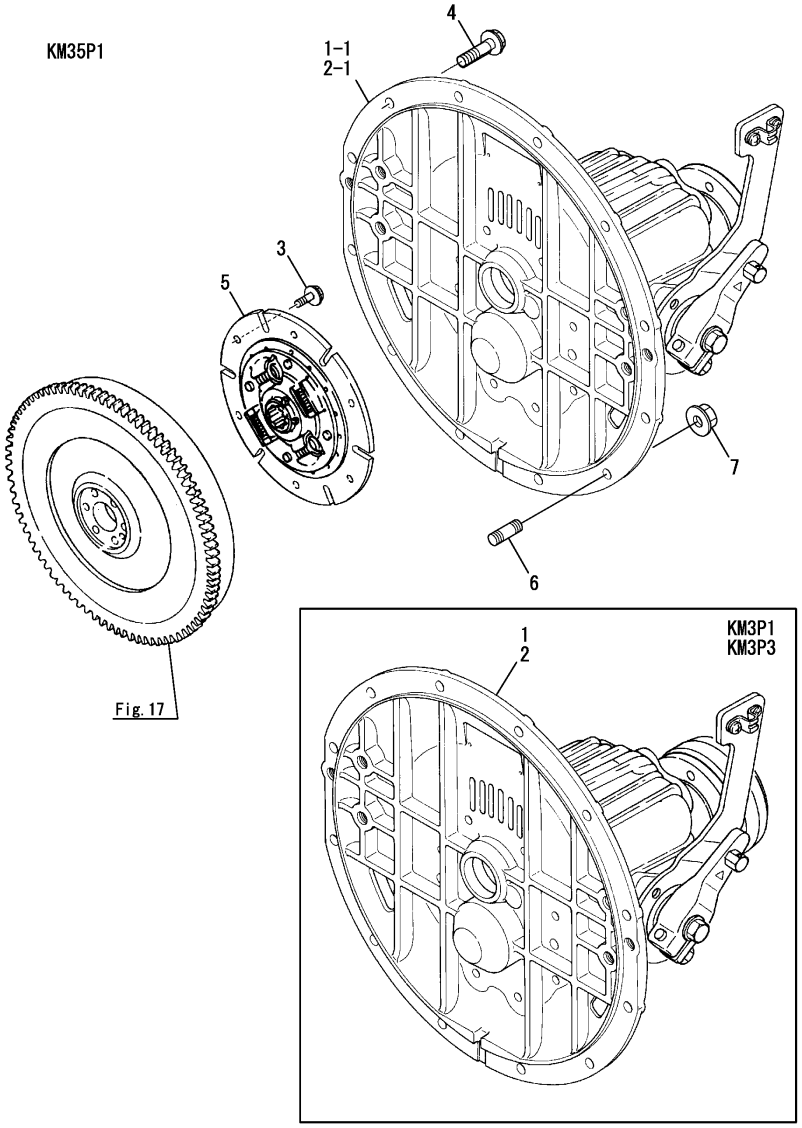

(A)=3JH25A (D)=
(B)=3JH30A (E)=
(C)= (F)=

No.	Lev.	Parts No.	Description	Q'ty (A)	(B)	(C)	(D)	(E)	(F)	I	R
1	1	129198-85010	CLUTCH ASSY, 2.36	1							
1-1	1	129270-81190	CLUTCH ASSY, 2.36	1						S	
	(A=*2002.06)										
2	1	129198-85050	CLUTCH ASSY, 2.36		1						
2-1	1	129270-81190	CLUTCH ASSY, 2.36		1					S	
		(B=*2002.06)									
3	1	26106-080162	BOLT, M8X 16 PLATED	6	6						
4	1	26106-100302	BOLT, M10X 30 PLATED	10	10						
5	1	177070-03510	DISK, DAMPER	1	1						
5-1	1	177070-03511	DISK, DAMPER	1	1					R	
	(A=*1991.07)	(B=*1991.07)									
6	1	26226-100202	STUD, M10X 20	2	2						
7	1	26306-100002	NUT, M10	2	2						

N:Old $\overset{\text{Yes}}{\underset{\text{No}}{\rightleftarrows}}$ New, Q:Old $\overset{\text{No}}{\underset{\text{Yes}}{\rightleftarrows}}$ New, R:Old $\overset{\text{Yes}}{\underset{\text{Yes}}{\rightleftarrows}}$ New, S:Old $\overset{\text{No}}{\underset{\text{No}}{\rightleftarrows}}$ New, W:Add, Z:Discontinued, F:Interchangeable by set, K:Q'ty Change

Copyright (C) 2014 YANMAR CO., LTD. All RightsReserved.

Fig.52. COUPLING

3JH25A

KM3P1
KM35P1

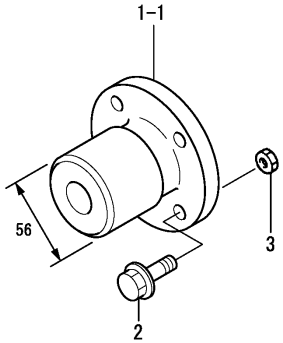

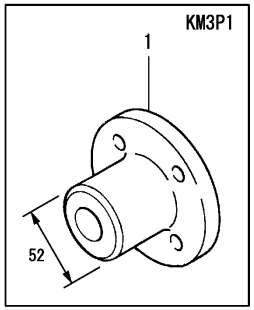

3JH30A

KM35P1

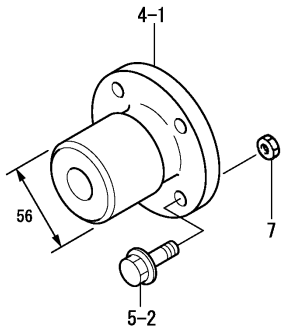

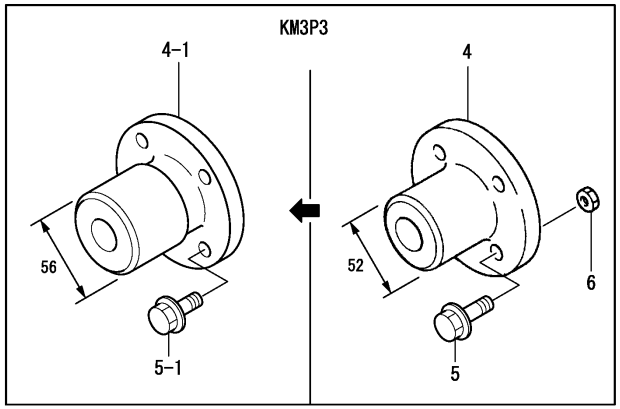

(A)=3JH25A (D)=
(B)=3JH30A (E)=
(C)= (F)=

No.	Lev.	Parts No.	Description	Q'ty (A)	(B)	(C)	(D)	(E)	(F)	I	R
1	1	105583-85900	COUPLING, 22	1							
1-1	1	129198-85520	COUPLING, 35	1						S	
	(A=*1986.09)										
2	1	26106-100322	BOLT, M10X 32 PLATED	4							
3	1	26706-100002	NUT, M10	4							
4	1	105583-85900	COUPLING, 22		1						
4-1	1	129198-85520	COUPLING, 35		1					S	
		(B=*1986.09)									
5	1	26106-100322	BOLT, M10X 32 PLATED		4						
5-1	1	26106-100252	BOLT, M10X 25 PLATED		4					S	
		(B=*1986.09)									
5-2	1	26106-100322	BOLT, M10X 32 PLATED		4					S	
		(B=*2002.06)									
6	1	26706-100002	NUT, M10		4					Z	
		(B=*1986.09)									
7	1	26706-100002	NUT, M10		4					W	
		(B=*2002.06)									

N:Old $\xleftrightarrow[\text{No}]{\text{Yes}}$ New, Q:Old $\xleftrightarrow[\text{Yes}]{\text{No}}$ New, R:Old $\xleftrightarrow[\text{Yes}]{\text{Yes}}$ New, S:Old $\xleftrightarrow[\text{No}]{\text{No}}$ New, W:Add, Z:Discontinued, F:Interchangeable by set, K:Q'ty Change

Copyright (C) 2014 YANMAR CO., LTD. All RightsReserved.

Fig.53. INSTRUMENT PANEL (B-TYPE)

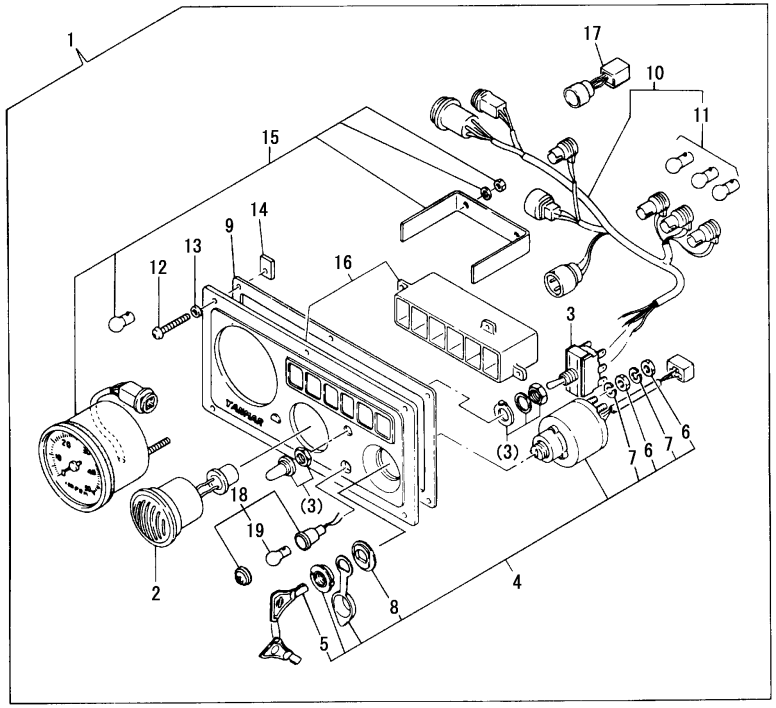

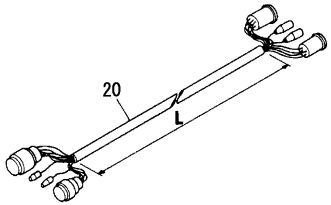

(A)=3JH25A (D)=
(B)=3JH30A (E)=
(C)= (F)=

No.	Lev.	Parts No.	Description	Q'ty (A)	(B)	(C)	(D)	(E)	(F)	I	R
1	1	129495-91100	PANEL ASSY, B	1	1					Z	
	(A=E00630)	(B=E00383)									
2	2	104271-91351	BUZZER	1	1						
3	2	128170-91310	SWITCH	1	1						
4	2	121575-91250	SWITCH, KEY	1	1						
5	3	123482-91291	SWITCH, KEY	1	1						
6	3	26716-050002	NUT, M5	10	10						
7	3	22217-050000	WASHER, SPRING 5	10	10						
8	3	121575-91260	ADAPTER	1	1						
9	2	128170-91020	GASKET	1	1						
10	2	129495-91120	HARNESS, WIRE	1	1						
11	3	124617-91920	BULB, 12V-3W	3	3						
12	2	128170-91810	SCREW, M5X35	6	6						
13	2	128170-91820	WASHER, 5	6	6						
14	2	128170-91830	NUT, M5	6	6						
15	2	129495-91150	TACHOMETER	1	1						
16	2	129495-91010	BODY, PANEL	1	1						
17	2	129795-91800	TIMER	1	1						
18	2	129795-91190	LAMP ASSY, PILOT	1	1						
19	3	124617-91920	BULB, 12V-3W	1	1						
20	1	129772-77500	HARNESS, WIRE 3.8M	1	1						

Remarks
* This figure is applicable to [(A)=E00629][(B)=E00382] or previous machines [Refer to Fig.83(53A)].

N:Old $\overset{\text{Yes}}{\underset{\text{No}}{\leftrightarrows}}$ New, Q:Old $\overset{\text{No}}{\underset{\text{Yes}}{\leftrightarrows}}$ New, R:Old $\overset{\text{Yes}}{\underset{\text{Yes}}{\leftrightarrows}}$ New, S:Old $\overset{\text{No}}{\underset{\text{No}}{\leftrightarrows}}$ New, W:Add, Z:Discontinued, F:Interchangeable by set, K:Q'ty Change

Copyright (C) 2014 YANMAR CO., LTD. All RightsReserved.

Fig.83. (53A)INSTRUMENT PANEL(B-TYPE)

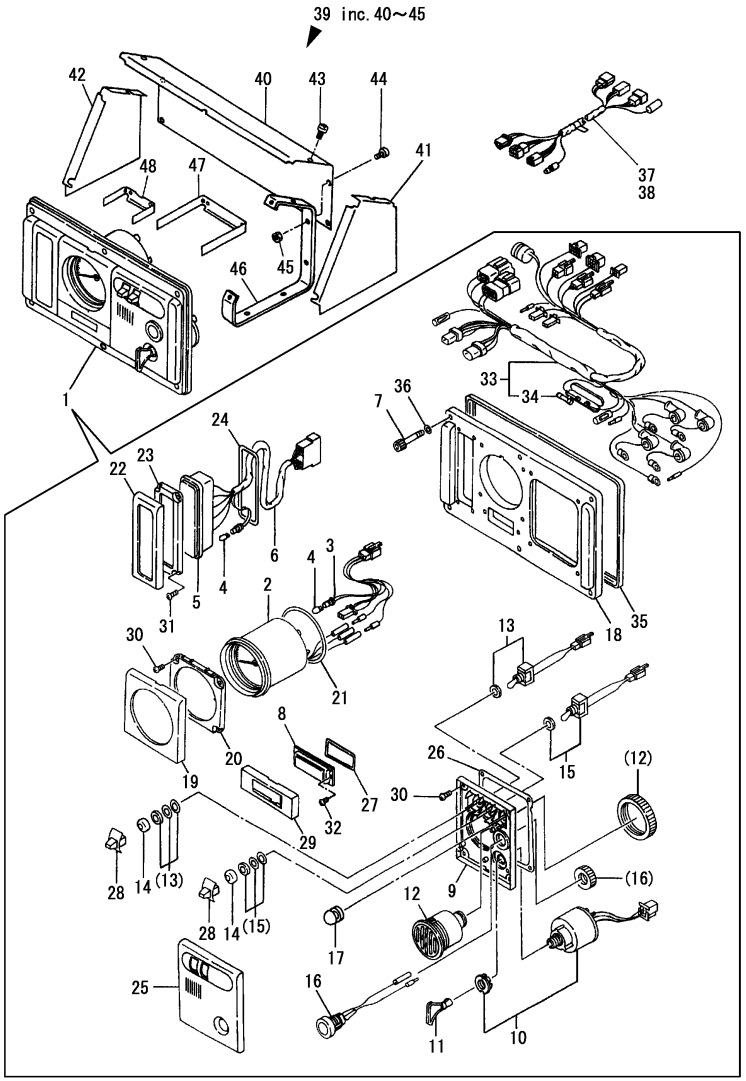

(A)=3JH25A (D)=
(B)=3JH30A (E)=
(C)= (F)=

No.	Lev.	Parts No.	Description	Q'ty (A)	(B)	(C)	(D)	(E)	(F)	I	R
1	1	129495-91130	PANEL ASSY, INSTRUM	1	1					W	
	(A=E00630)	(B=E00383)									
2	2	129574-91200	METER KIT,TACHO/HOUR	1	1						
3	2	129574-91870	HARNESS, WIRE	1	1						
4	2	124617-91980	BULB, 12V-1.7W	5	5						
5	2	129495-91260	BOX	1	1						
6	2	129495-91860	HARNESS, WIRE	1	1						
7	2	127687-91870	BOLT, M6X35	6	6						
8	2	129170-91650	COVER	1	1						
9	2	129574-91410	BRACKET, SWITCH	1	1						
10	2	121575-91250	SWITCH, KEY	1	1						
11	2	123482-91291	SWITCH, KEY	1	1						
12	2	104271-91352	BUZZER 12V	1	1						
13	2	129170-91800	SWITCH	1	1						
14	2	129574-91780	CAP, RUBBER	2	2						
15	2	129574-91790	SWITCH	1	1						
16	2	129470-91190	SWITCH, STOP	1	1						
17	2	129170-91810	COVER	1	1						
18	2	128391-91930	PANEL	1	1						
19	2	129574-91620	BEZEL	1	1						
20	2	129574-91420	BRACKET	1	1						
21	2	129574-91720	GASKET	1	1						
22	2	128391-91640	BEZEL	1	1						
23	2	128391-91440	PLATE	1	1						
24	2	128391-91740	GASKET	1	1						
25	2	129170-91610	BEZEL	1	1						
26	2	129574-91710	GASKET	1	1						
27	2	129574-91750	GASKET	1	1						
28	2	129574-91770	KNOB	2	2						
29	2	129574-91650	BEZEL	1	1						
30	2	127692-91410	SCREW	8	8						
31	2	127692-91440	SCREW	4	4						
32	2	127692-91450	SCREW	2	2						
33	2	129570-91850	HARNESS, WIRE	1	1						
34	3	124617-91990	FUSE	1	1						
35	2	128391-91700	GASKET	1	1						
36	2	127687-91880	WASHER	6	6						
37	1	129574-77710	HARNESS, WIRE 4M	1	1						
38	1	129198-77700	HARNESS, WIRE 0.3M	1	1					W	1
	(A=E00684)	(B=E00413)									
39	1	129574-91900	COVER ASSY	1	1					W	1
	(A=E00674)	(B=E00409)									
40	2	129574-91950	COVER, PANEL	1	1					W	
	(A=E00674)	(B=E00409)									
41	2	129574-91960	COVER, PANEL	1	1					W	
	(A=E00674)	(B=E00409)									
42	2	129574-91970	COVER, PANEL	1	1					W	
	(A=E00674)	(B=E00409)									
43	2	26559-060122	SCREW, M6X12	2	2					W	
	(A=E00674)	(B=E00409)									
44	2	26556-060122	SCREW M 6X12	4	4					W	2

N:Old $\xleftarrow[\text{No}]{\text{Yes}}$ New, Q:Old $\xleftarrow[\text{Yes}]{\text{No}}$ New, R:Old $\xleftarrow[\text{Yes}]{\text{Yes}}$ New, S:Old $\xleftarrow[\text{No}]{\text{No}}$ New, W:Add, Z:Discontinued, F:Interchangeable by set, K:Q'ty Change

Remarks
* This figure is applicable to [(A)=E00630 - E00702][(B)=E00383 - E00432] machines
(Refer to Fig.53).
(1)Optional parts.
(2)Not needed when mounting on the side.

++ CONTINUE ++

Copyright (C) 2014 YANMAR CO., LTD. All RightsReserved.

Fig.83. (53A)INSTRUMENT PANEL(B-TYPE)

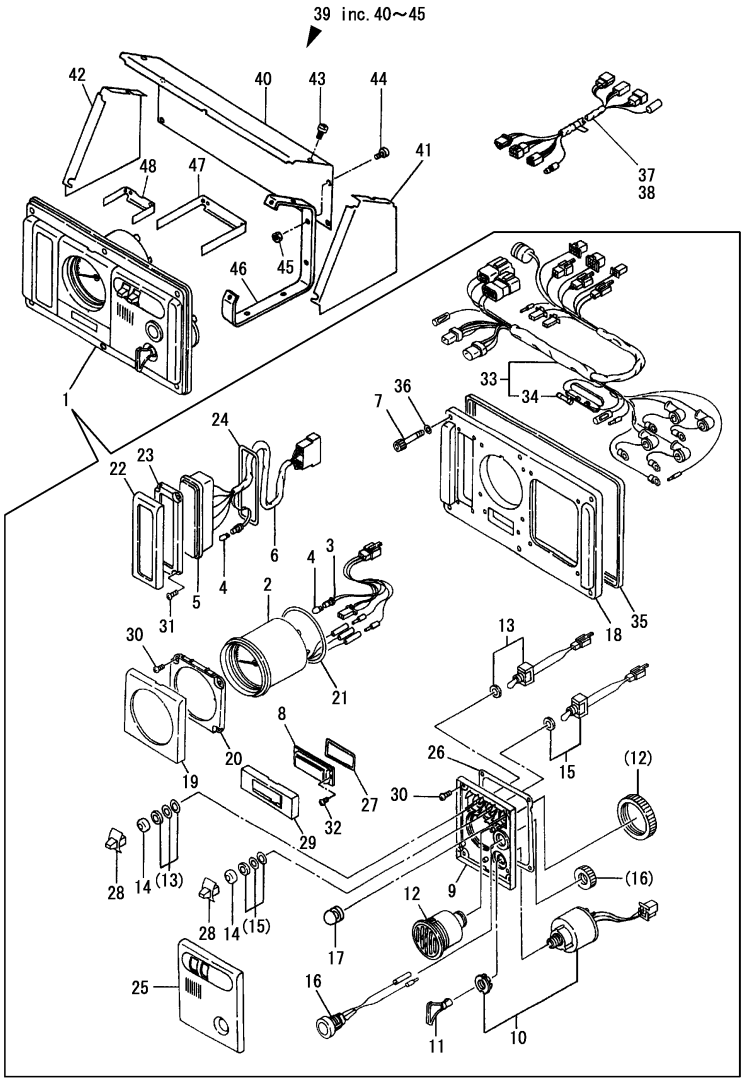

(A)=3JH25A (D)=
(B)=3JH30A (E)=
(C)= (F)=

No.	Lev.	Parts No.	Description	Q'ty (A)	(B)	(C)	(D)	(E)	(F)	I	R
	(A=E00674)	(B=E00409)									
45	2	26716-060002	NUT, M6	4	4					W	2
	(A=E00674)	(B=E00409)									
46	1	129574-91530	BRACKET, PANEL	2	2					W	1
	(A=E00674)	(B=E00409)									
47	1	129574-91540	BRACKET	1	1					W	1
	(A=E00674)	(B=E00409)									
48	1	129574-91550	BRACKET	1	1					W	1
	(A=E00674)	(B=E00409)									

Remarks
* This figure is applicable to [(A)=E00630 - E00702][(B)=E00383 - E00432] machines
(Refer to Fig.53).
(1)Optional parts.
(2)Not needed when mounting on the side.

N:Old ←Yes/No→ New, Q:Old ←No/Yes→ New, R:Old ←Yes/Yes→ New, S:Old ←No/No→ New, W:Add, Z:Discontinued, F:Interchangeable by set, K:Q'ty Change

Copyright (C) 2014 YANMAR CO., LTD. All RightsReserved.

Fig.84. (53B)INSTRUMENT PANEL(B-TYPE)

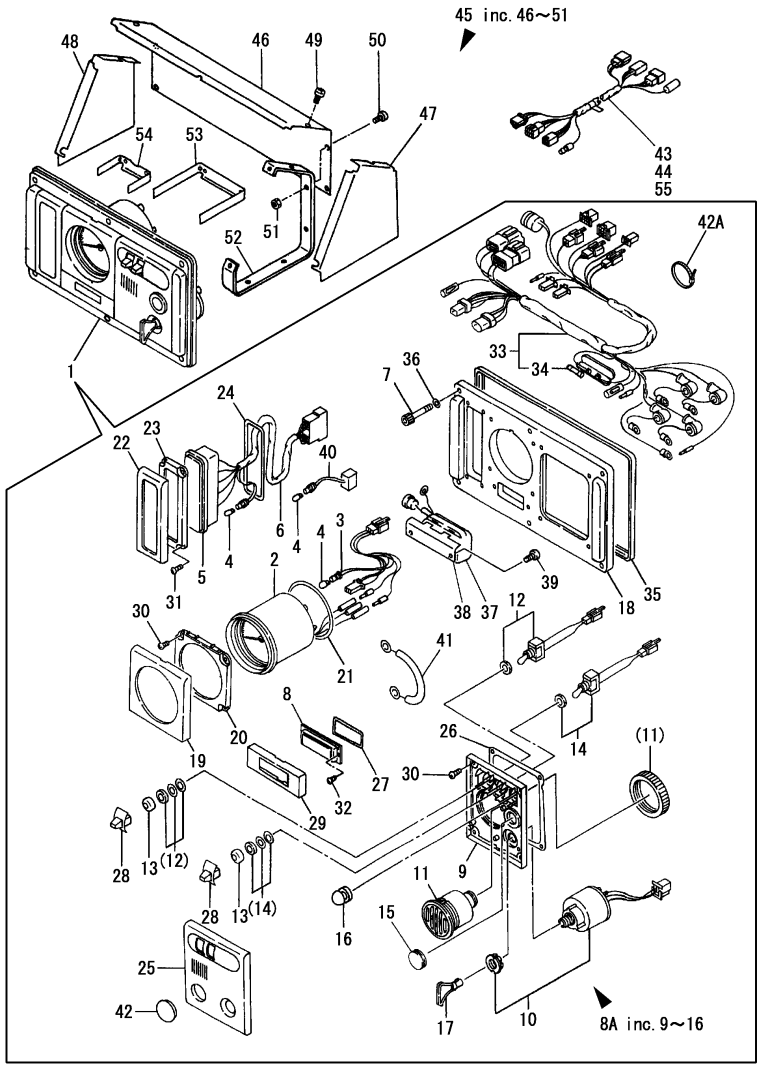

(A)=3JH25A (D)=
(B)=3JH30A (E)=
(C)= (F)=

No.	Lev.	Parts No.	Description	Q'ty (A)	(B)	(C)	(D)	(E)	(F)	I	R
1	1	129198-91130	PANEL, INSTRUMENT B	1	1					W	1
	(A=E00703)	(B=E00433)									
2	2	129574-91200	METER KIT,TACHO/HOUR	1	1						
3	2	129574-91870	HARNESS, WIRE	1	1						
4	2	124617-91980	BULB, 12V-1.7W	6	6						
5	2	129198-91260	BOX, ALARM	1	1						
6	2	129198-91860	HARNESS, WIRE	1	1						
7	2	127687-91870	BOLT, M6X35	6	6						
8	2	129170-91650	COVER	1	1						
8A	2	129198-91230	BOX, SWITCH	1	1					W	
	(A=E00876)	(B=E00876)									
9	3	129574-91410	BRACKET, SWITCH	1	1						
10	3	121575-91250	SWITCH, KEY	1	1						
11	3	104271-91352	BUZZER 12V	1	1						
12	3	129170-91800	SWITCH	1	1						
13	3	129574-91780	CAP, RUBBER	2	2						
14	3	129574-91790	SWITCH	1	1						
15	3	120324-91690	COVER	1	1						
16	3	129170-91810	COVER	1	1						
17	2	123482-91291	SWITCH, KEY	1	1						
18	2	128391-91930	PANEL	1	1						
19	2	129574-91620	BEZEL	1	1						
20	2	129574-91420	BRACKET	1	1						
21	2	129574-91720	GASKET	1	1						
22	2	128391-91640	BEZEL	1	1						
23	2	128391-91440	PLATE	1	1						
24	2	128391-91740	GASKET	1	1						
25	2	120324-91610	BEZEL	1	1						
26	2	129574-91710	GASKET	1	1						
27	2	129574-91750	GASKET	1	1						
28	2	129574-91770	KNOB	2	2						
29	2	129574-91650	BEZEL	1	1						
30	2	127692-91410	SCREW	8	8						
31	2	127692-91440	SCREW	4	4						
32	2	127692-91450	SCREW	2	2						
33	2	129198-91850	HARNESS, WIRE	1	1						
34	3	124617-91990	FUSE	1	1						
35	2	128391-91700	GASKET	1	1						
36	2	127687-91880	WASHER	6	6						
37	2	129795-91800	TIMER	1	1						
38	2	129198-91810	BRACKET	1	1						
39	2	129198-91820	SCREW	2	2						
40	2	129198-91880	WIRE	1	1						
41	2	129198-91890	CORD ASSY	1	1						
42	2	129574-91760	COVER	1	1					W	
	(A=E00737)	(B=E00446)									
42A	2	198451-78680	CLAMP, CORD	1	1					W	
	(A=E00876)	(B=E00876)									
43	1	129574-77710	HARNESS, WIRE 4M	1	1						
44	1	129198-77700	HARNESS, WIRE 0.3M	1	1					W	1
	(A=E00684)	(B=E00413)									

Remarks
* This figure is applicable to [(A)=E00703][(B)=E00433] or following machines [Refer to Fig.83(53A)].
(1)Optional parts.
(2)Not needed when mounting on the side.

N:Old $\xleftarrow[\text{No}]{\text{Yes}}$ New, Q:Old $\xleftarrow[\text{Yes}]{\text{No}}$ New, R:Old $\xleftarrow[\text{Yes}]{\text{Yes}}$ New, S:Old $\xleftarrow[\text{No}]{\text{No}}$ New, W:Add, Z:Discontinued, F:Interchangeable by set, K:Q'ty Change

++ CONTINUE ++

Copyright (C) 2014 YANMAR CO., LTD. All RightsReserved.

Fig.84. (53B)INSTRUMENT PANEL(B-TYPE)

(A)=3JH25A (D)=
(B)=3JH30A (E)=
(C)= (F)=

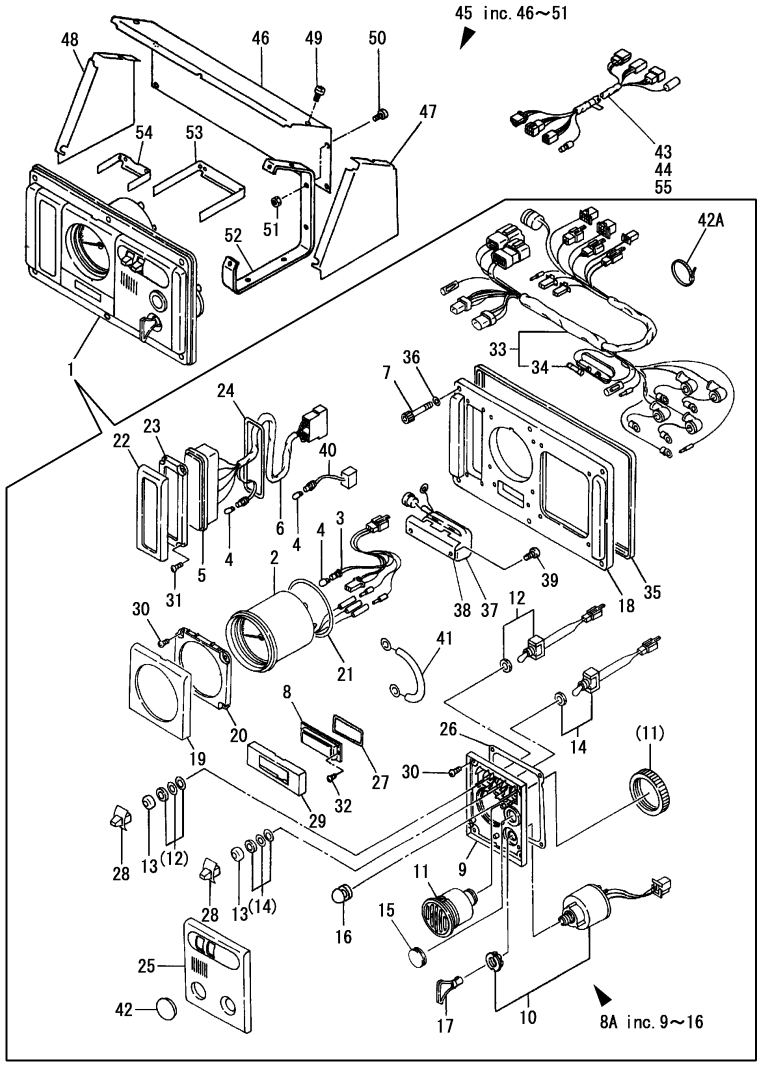

No.	Lev.	Parts No.	Description	Q'ty (A)	(B)	(C)	(D)	(E)	(F)	I	R
45	1	129574-91900	COVER ASSY	1	1					W	1
	(A=E00674)	(B=E00409)									
46	2	129574-91950	COVER, PANEL	1	1					W	
	(A=E00674)	(B=E00409)									
47	2	129574-91960	COVER, PANEL	1	1					W	
	(A=E00674)	(B=E00409)									
48	2	129574-91970	COVER, PANEL	1	1					W	
	(A=E00674)	(B=E00409)									
49	2	26559-060122	SCREW, M6X12	2	2					W	
	(A=E00674)	(B=E00409)									
50	2	26556-060122	SCREW M 6X12	4	4					W	2
	(A=E00674)	(B=E00409)									
51	2	26716-060002	NUT, M6	4	4					W	2
	(A=E00674)	(B=E00409)									
52	1	129574-91530	BRACKET, PANEL	2	2					W	1
	(A=E00674)	(B=E00409)									
53	1	129574-91540	BRACKET	1	1					W	1
	(A=E00674)	(B=E00409)									
54	1	129574-91550	BRACKET	1	1					W	1
	(A=E00674)	(B=E00409)									
55	1	129574-77720	HARNESS, WIRE 6M	1	1					W	
	(A=E07258)	(B=E07258)									

Remarks
* This figure is applicable to [(A)=E00703][(B)=E00433] or following machines [Refer to Fig.83(53A)].
(1)Optional parts.
(2)Not needed when mounting on the side.

N:Old $\overset{\text{Yes}}{\underset{\text{No}}{\leftrightarrows}}$ New, Q:Old $\overset{\text{No}}{\underset{\text{Yes}}{\leftrightarrows}}$ New, R:Old $\overset{\text{Yes}}{\underset{\text{Yes}}{\leftrightarrows}}$ New, S:Old $\overset{\text{No}}{\underset{\text{No}}{\leftrightarrows}}$ New, W:Add, Z:Discontinued, F:Interchangeable by set, K:Q'ty Change

Copyright (C) 2014 YANMAR CO., LTD. All RightsReserved.

Fig.85. (53C)INSTRUMENT PANEL(C-TYPE)(NEW)

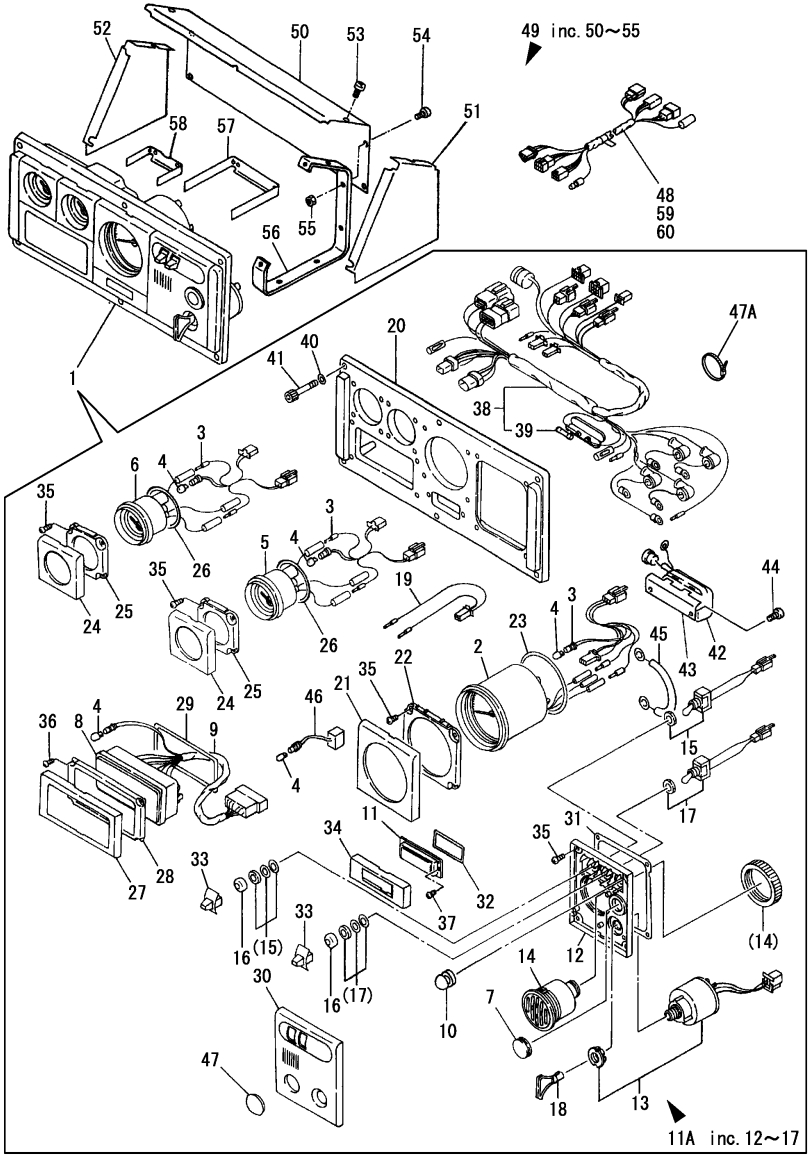

Remarks
(1)Not needed when mounting on the side.

(A)=3JH25A (D)=
(B)=3JH30A (E)=
(C)= (F)=

No.	Lev.	Parts No.	Description	Q'ty (A)	(B)	(C)	(D)	(E)	(F)	I	R
1	1	129198-91160	PANEL, INSTRUMENT C	1	1					W	
	(A=E00703)	(B=E00433)									
1-1	1	129198-91161	PANEL ASSY, C	1	1					N	
	(A=*1999.10)	(B=*1999.10)									
1-2	1	129198-91162	PANEL ASSY, C	1	1					R	
	(A=*2002.01)	(B=*2002.01)									
2	2	129574-91200	METER KIT,TACHO/HOUR	1	1						
3	2	129574-91870	HARNESS, WIRE	3	3						
4	2	124617-91980	BULB, 12V-1.7W	7	7						
5	2	129574-91210	METER, WATER TEMP.	1	1						
6	2	129574-91220	METER, OIL PRESSUER	1	1						
6-1	2	129574-91221	METER	1	1					N	
	(A=*1999.10)	(B=*1999.10)									
6-2	2	129574-91222	METER, OIL PRESSUER	1	1					R	
	(A=*2002.01)	(B=*2002.01)									
7	2	120324-91690	COVER	1	1						
8	2	129198-91280	BOX	1	1						
9	2	129198-91860	HARNESS, WIRE	1	1						
10	2	129170-91810	COVER	1	1						
11	2	129170-91650	COVER	1	1						
11A	2	129198-91230	BOX, SWITCH	1	1					W	
	(A=E00876)	(B=E00876)									
12	3	129574-91410	BRACKET, SWITCH	1	1						
13	3	121575-91250	SWITCH, KEY	1	1						
14	3	104271-91352	BUZZER 12V	1	1						
15	3	129170-91800	SWITCH	1	1						
16	3	129574-91780	CAP, RUBBER	2	2						
17	3	129574-91790	SWITCH	1	1						
18	2	123482-91291	SWITCH, KEY	1	1						
19	2	129574-91890	HARNESS, WIRE	1	1						
20	2	129170-91930	PANEL	1	1						
21	2	129574-91620	BEZEL	1	1						
22	2	129574-91420	BRACKET	1	1						
23	2	129574-91720	GASKET	1	1						
24	2	129574-91630	BEZEL	2	2						
25	2	129574-91430	BRACKET	2	2						
26	2	129574-91730	GASKET	2	2						
27	2	129574-91640	BEZEL	1	1						
28	2	129574-91440	BRACKET	1	1						
29	2	129574-91740	GASKET	1	1						
30	2	120324-91610	BEZEL	1	1						
31	2	129574-91710	GASKET	1	1						
32	2	129574-91750	GASKET	1	1						
33	2	129574-91770	KNOB	2	2						
34	2	129574-91650	BEZEL	1	1						
35	2	127692-91410	SCREW	16	16						
36	2	127692-91440	SCREW	4	4						
37	2	127692-91450	SCREW	2	2						
38	2	129198-91830	HARNESS, WIRE	1	1						
39	3	124617-91990	FUSE	1	1						
40	2	127687-91880	WASHER	6	6						

N:Old $\overset{\text{Yes}}{\underset{\text{No}}{\leftrightarrow}}$ New, Q:Old $\overset{\text{No}}{\underset{\text{Yes}}{\leftrightarrow}}$ New, R:Old $\overset{\text{Yes}}{\underset{\text{Yes}}{\leftrightarrow}}$ New, S:Old $\overset{\text{No}}{\underset{\text{No}}{\leftrightarrow}}$ New, W:Add, Z:Discontinued, F:Interchangeable by set, K:Q'ty Change

++ CONTINUE ++

Copyright (C) 2014 YANMAR CO., LTD. All RightsReserved.

Fig.85. (53C)INSTRUMENT PANEL(C-TYPE)(NEW)

(A)=3JH25A (D)=
(B)=3JH30A (E)=
(C)= (F)=

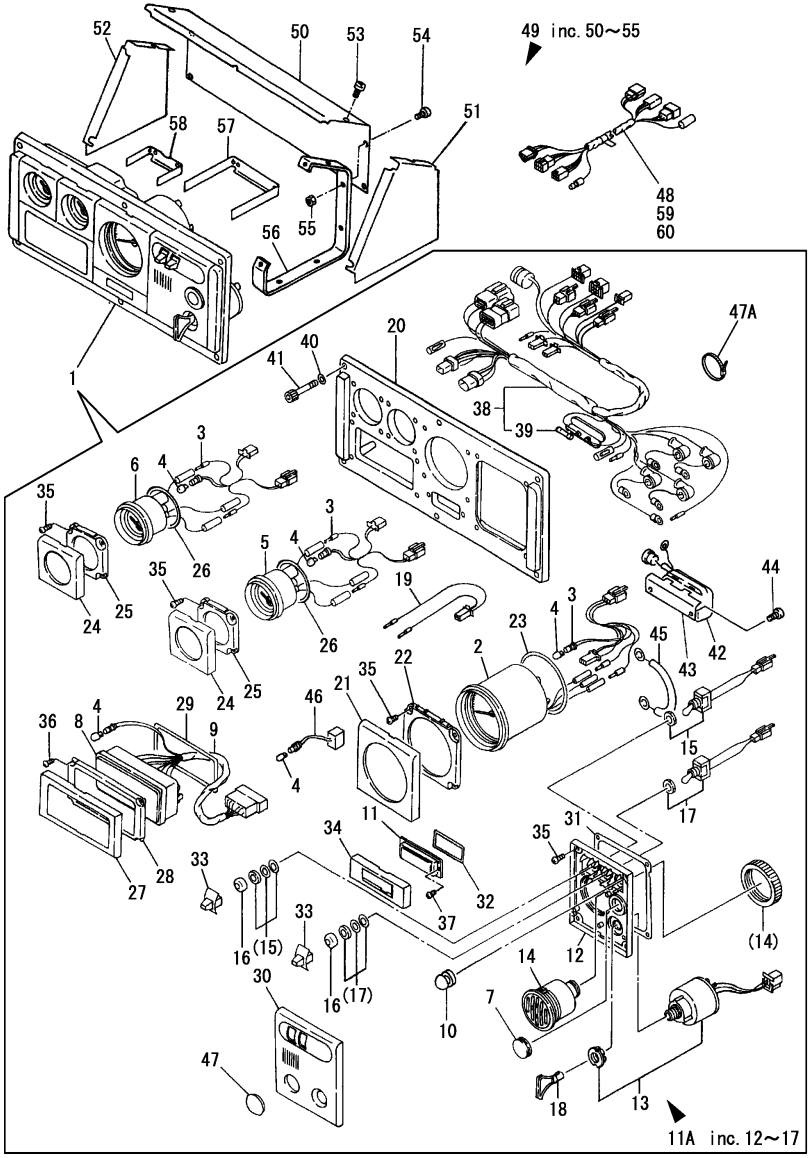

No.	Lev.	Parts No.	Description	Q'ty (A)	(B)	(C)	(D)	(E)	(F)	I	R
41	2	127687-91870	BOLT, M6X35	6	6						
42	2	129795-91800	TIMER	1	1						
43	2	129198-91810	BRACKET	1	1						
44	2	129198-91820	SCREW	2	2						
45	2	129198-91880	WIRE	1	1						
46	2	129198-91890	CORD ASSY	1	1						
47	2	129574-91760	COVER	1	1					W	
	(A=E00737)	(B=E00446)									
47A	2	198451-78680	CLAMP, CORD	1	1					W	
	(A=E00876)	(B=E00876)									
48	1	129198-77700	HARNESS, WIRE 0.3M	1	1					W	
	(A=E00684)	(B=E00413)									
49	1	120324-91900	COVER, PANEL	1	1					W	
	(A=E00674)	(B=E00409)									
50	2	120324-91950	COVER	1	1					W	
	(A=E00674)	(B=E00409)									
51	2	129574-91960	COVER, PANEL	1	1					W	
	(A=E00674)	(B=E00409)									
52	2	129574-91970	COVER, PANEL	1	1					W	
	(A=E00674)	(B=E00409)									
53	2	26559-060122	SCREW, M6X12	2	2					W	
	(A=E00674)	(B=E00409)									
54	2	26556-060122	SCREW M 6X12	4	4					W	1
	(A=E00674)	(B=E00409)									
55	2	26716-060002	NUT, M6	4	4					W	1
	(A=E00674)	(B=E00409)									
56	1	129574-91530	BRACKET, PANEL	2	2					W	
	(A=E00674)	(B=E00409)									
57	1	129574-91540	BRACKET	1	1					W	
	(A=E00674)	(B=E00409)									
58	1	129574-91550	BRACKET	1	1					W	
	(A=E00674)	(B=E00409)									
59	1	129574-77710	HARNESS, WIRE 4M	1	1					W	
	(A=E00106)	(B=E00111)									
60	1	129574-77720	HARNESS, WIRE 6M	1	1					W	
	(A=E07258)	(B=E07258)									

Remarks
(1)Not needed when mounting on the side.

N:Old ←Yes/No→ New, Q:Old ←No/Yes→ New, R:Old ←Yes/Yes→ New, S:Old ←No/No→ New, W:Add, Z:Discontinued, F:Interchangeable by set, K:Q'ty Change

Copyright (C) 2014 YANMAR CO., LTD. All RightsReserved.

Fig.54. TOOLS

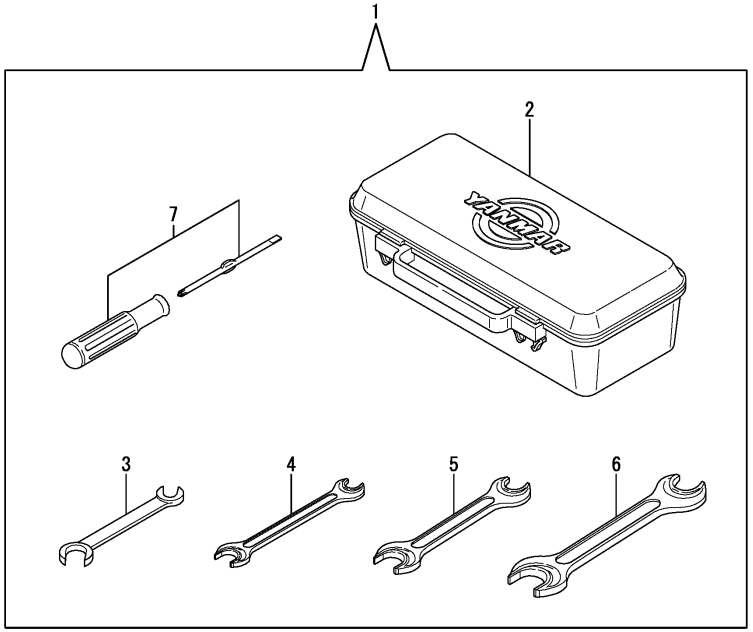

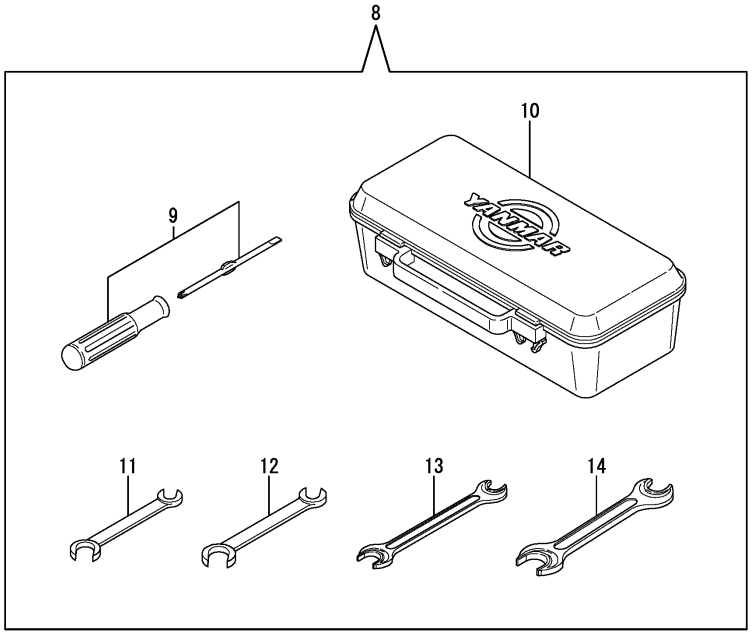

(A)=3JH25A (D)=
(B)=3JH30A (E)=
(C)= (F)=

No.	Lev.	Parts No.	Description	Q'ty (A)	(B)	(C)	(D)	(E)	(F)	I	R
1	1	724772-92100	BOX ASSY, TOOL	1	1					Z	
	(A=*2011.11)	(B=*2011.11)									
2	2	104200-92600	BOX, TOOL	1	1					Z	
	(A=*2011.14)	(B=*2011.14)									
3	2	28110-100130	SPANNER, 10X13	1	1					Z	
	(A=*2011.15)	(B=*2011.15)									
4	2	28110-120140	SPANNER, 12X14	1	1					Z	
	(A=*2011.16)	(B=*2011.16)									
5	2	28110-170190	SPANNER, 17X19	1	1					Z	
	(A=*2011.17)	(B=*2011.17)									
6	2	28110-220240	SPANNER, 22X24	1	1					Z	
	(A=*2011.12)	(B=*2011.12)									
7	2	104200-92350	SCREW-DRIVER	1	1					Z	
	(A=*2011.13)	(B=*2011.13)									
8	1	719195-92500	TOOL ASSY	1	1					W	
	(A=*2011.18)	(B=*2011.18)									
9	2	104200-92350	SCREW-DRIVER	1	1					W	
	(A=*2011.19)	(B=*2011.19)									
10	2	104200-92600	BOX, TOOL	1	1					W	
	(A=*2011.20)	(B=*2011.20)									
11	2	28110-080100	SPANNER, 8X10	1	1					W	
	(A=*2011.21)	(B=*2011.21)									
12	2	28110-100130	SPANNER, 10X13	1	1					W	
	(A=*2011.22)	(B=*2011.22)									
13	2	28110-120140	SPANNER, 12X14	1	1					W	
	(A=*2011.23)	(B=*2011.23)									
14	2	28110-170190	SPANNER, 17X19	1	1					W	
	(A=*2011.24)	(B=*2011.24)									

N:Old $\xleftrightarrow[\text{No}]{\text{Yes}}$ New, Q:Old $\xleftrightarrow[\text{Yes}]{\text{No}}$ New, R:Old $\xleftrightarrow[\text{Yes}]{\text{Yes}}$ New, S:Old $\xleftrightarrow[\text{No}]{\text{No}}$ New, W:Add, Z:Discontinued, F:Interchangeable by set, K:Q'ty Change

Copyright (C) 2014 YANMAR CO., LTD. All RightsReserved.

Fig.59. LABELS(BUNDLED)

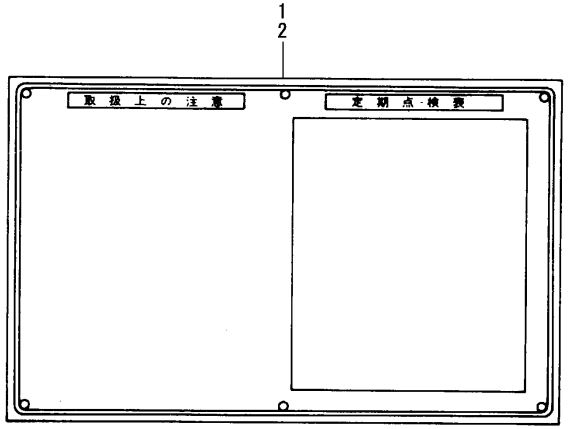

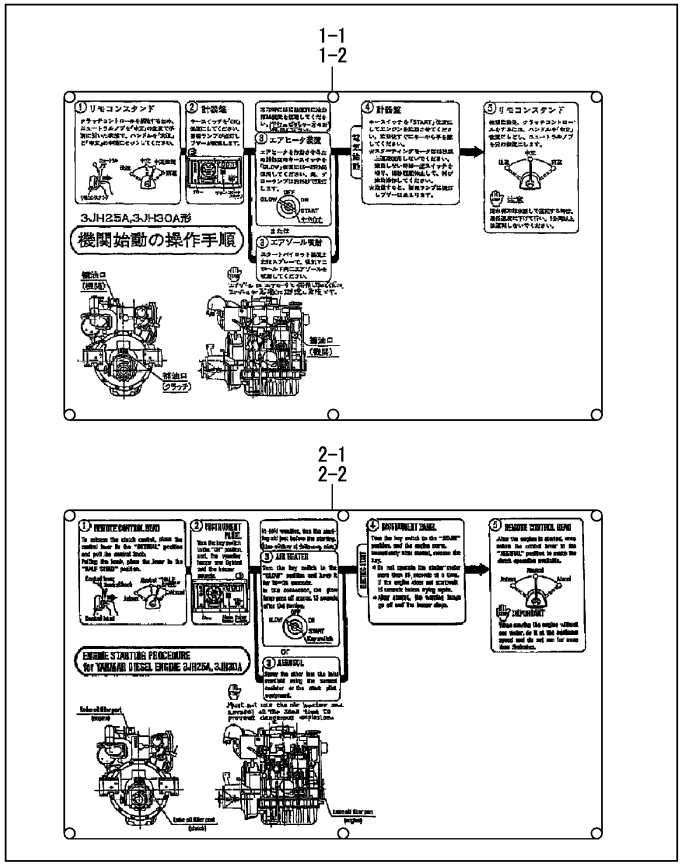

(A)=3JH25A (D)=
(B)=3JH30A (E)=
(C)= (F)=

No.	Lev.	Parts No.	Description	Q'ty (A)	(B)	(C)	(D)	(E)	(F)	I	R
1	1	129198-07460	LABEL, CAUTION	1	1						
1-1	1	129198-07470	LABEL	1	1					N	
	(A=*1986.08)	(B=*1986.08)									
1-2	1	129198-07471	LABEL,START.PROCEDUR	1	1					N	
	(A=*2002.07)	(B=*2002.07)									
2	1	129198-07450	LABEL, CAUTION	1	1						
2-1	1	129198-07480	LABEL, START	1	1					N	
	(A=*1986.08)	(B=*1986.08)									
2-2	1	129198-07481	LABEL, START	1	1					N	
	(A=*2002.07)	(B=*2002.07)									

N:Old $\overset{\text{Yes}}{\underset{\text{No}}{\leftrightarrow}}$ New, Q:Old $\overset{\text{No}}{\underset{\text{Yes}}{\leftrightarrow}}$ New, R:Old $\overset{\text{Yes}}{\underset{\text{Yes}}{\leftrightarrow}}$ New, S:Old $\overset{\text{No}}{\underset{\text{No}}{\leftrightarrow}}$ New, W:Add, Z:Discontinued, F:Interchangeable by set, K:Q'ty Change

Copyright (C) 2014 YANMAR CO., LTD. All RightsReserved.

Fig.101. (59A)LABELS(BUNDLED : WITH HAND STARTING SPEC)(OPTIONAL)

(A)=3JH25A
(B)=3JH30A
(C)=
(D)=
(E)=
(F)=

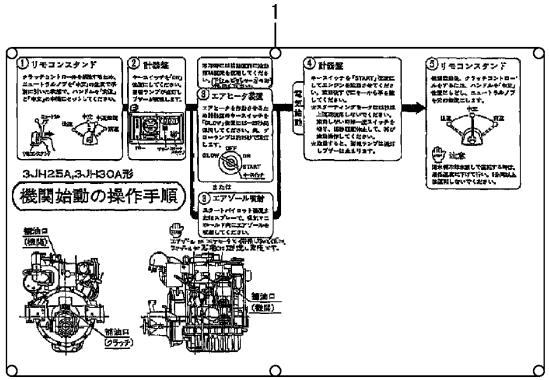

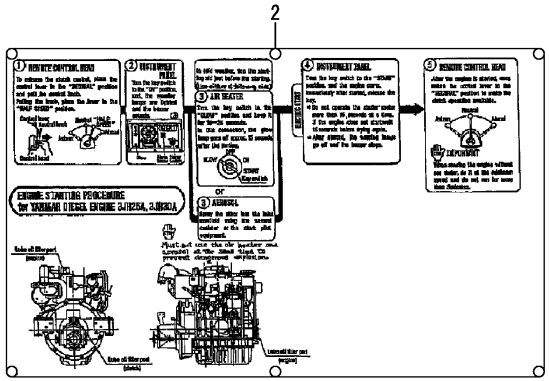

No.	Lev.	Parts No.	Description	Q'ty (A)	(B)	(C)	(D)	(E)	(F)	I	R
1	1	129198-07410	LABEL, START	1	1					W	
	(A=*1996.08)	(B=*1996.08)									
1-1	1	129198-07411	LABEL,START.PROCEDUR	1	1					N	
	(A=*2002.07)	(B=*2002.07)									
2	1	129198-07420	LABEL, START	1	1					W	
	(A=*1996.08)	(B=*1996.08)									
2-1	1	129198-07421	LABEL, START	1	1					N	
	(A=*2002.07)	(B=*2002.07)									

N:Old ◄Yes/No► New, Q:Old ◄No/Yes► New, R:Old ◄Yes/Yes► New, S:Old ◄No/No► New, W:Add, Z:Discontinued, F:Interchangeable by set, K:Q'ty Change

Copyright (C) 2014 YANMAR CO., LTD. All RightsReserved.

Fig.65. BILGE PUMP(OPTIONAL)

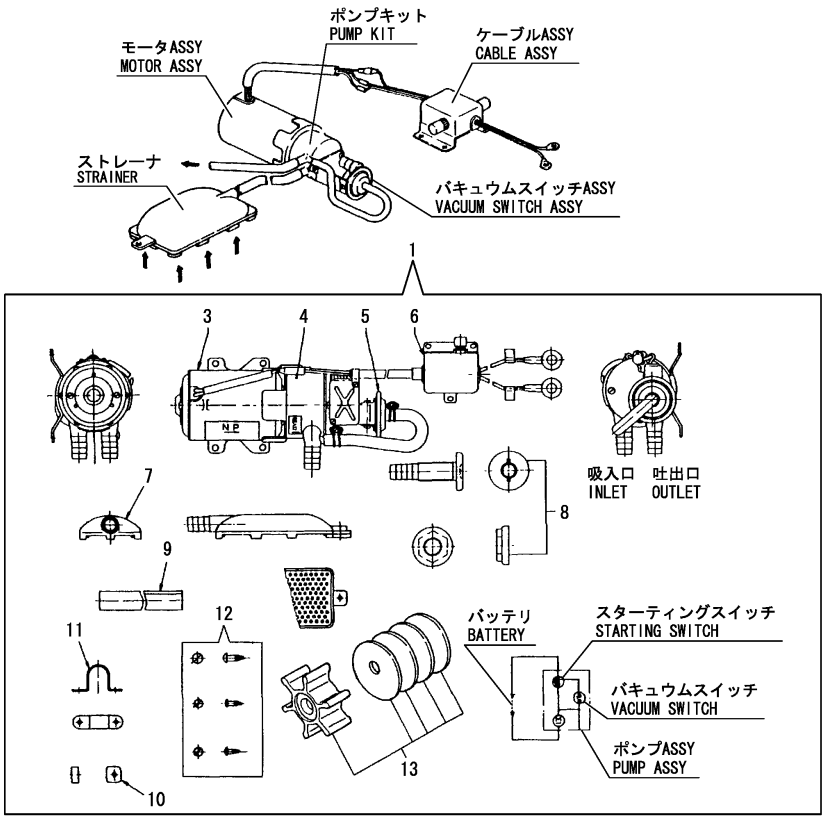

(A)=3JH25A (D)=
(B)=3JH30A (E)=
(C)= (F)=

No.	Lev.	Parts No.	Description	Q'ty (A)	(B)	(C)	(D)	(E)	(F)	I	R
1	1	977782-00121	PUMP ASSY, W/TIMMER	1	1					Z	
	(A=*1992.08)	(B=*1992.08)									
3	2	XBP1902200	MOTER ASSY	1	1						
4	2	XBP1901300	PUMP SET	1	1						
5	2	XBP1902400	VACUUM SWITCH ASSY	1	1						
6	2	XBP1905500	CABLE ASSY.	1	1						
7	2	XBP1902810	STRAINER	1	1						
8	2	XBP1901820	OUTLET	1	1						
9	2	XBP1901830	HOSE	1	1						
10	2	XBP1901910	SPACER	1	1						
11	2	XBP1901920	CLAMP	1	1						
12	2	XBP1901950	SCREW SET	1	1						
13	2	947859-20010	IMPELLER	1	1						

Remarks
* This item is applicable to [(A)(B)=July, 1992] or previous machines [Refer to Fig.95(65A), 96(65B)].

N:Old $\overset{\text{Yes}}{\underset{\text{No}}{\leftrightarrow}}$ New, Q:Old $\overset{\text{No}}{\underset{\text{Yes}}{\leftrightarrow}}$ New, R:Old $\overset{\text{Yes}}{\underset{\text{Yes}}{\leftrightarrow}}$ New, S:Old $\overset{\text{No}}{\underset{\text{No}}{\leftrightarrow}}$ New, W:Add, Z:Discontinued, F:Interchangeable by set, K:Q'ty Change

Copyright (C) 2014 YANMAR CO., LTD. All RightsReserved.

Fig.95. (65A)BILGE PUMP(STD)(OPTIONAL)

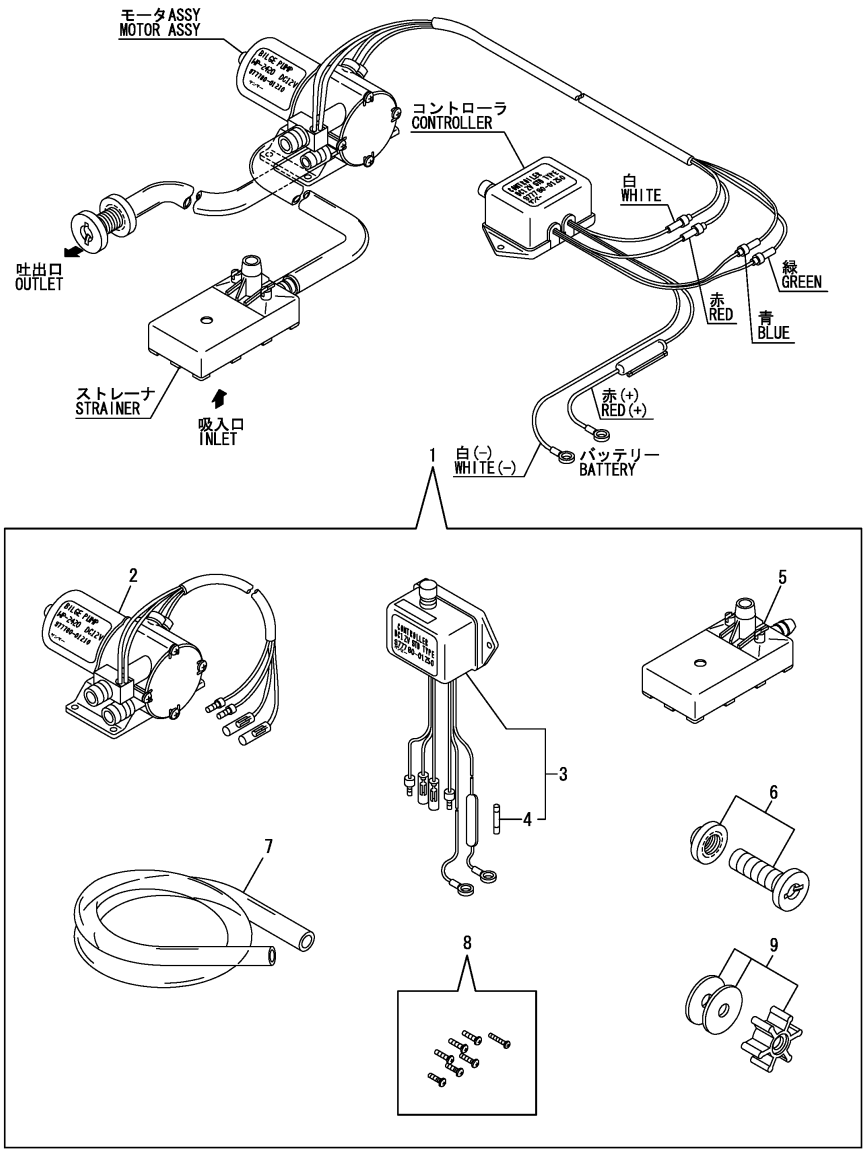

(A)=3JH25A (D)=
(B)=3JH30A (E)=
(C)= (F)=

No.	Lev.	Parts No.	Description	Q'ty (A)	(B)	(C)	(D)	(E)	(F)	I	R
1	1	977780-01210	PUMP(12V).BILGE	1	1					W	
	(A=*1992.08)	(B=*1992.08)									
1-1	1	977780-01211	PUMP ASSY, BILGE	1	1					N	1
	(A=*1997.01)	(B=*1997.01)									
2	2	977780-01230	MOTOR ASSY(BILG PUMP	1	1						
3	2	977780-01250	CONTROLLER	1	1						
4	3	X8636008003	FUSE	1	1						
5	2	X179100021X	STRAINER	1	1						
6	2	X179100100X	PIPE ASSY	1	1						
7	2	X0044021509	HOSE A	1	1						
8	2	X199903800X	SCREW KIT	1	1						
9	2	977780-03000	INPELLER	1	1						

Remarks
* This item is applicable to [(A)(B)=Aug., 1992] or following machines (Refer to Fig.65).
(1)Inner parts are shown in Fig.97(65C).

N:Old $\xleftarrow[\text{No}]{\text{Yes}}$ New, Q:Old $\xleftarrow[\text{Yes}]{\text{No}}$ New, R:Old $\xleftarrow[\text{Yes}]{\text{Yes}}$ New, S:Old $\xleftarrow[\text{No}]{\text{No}}$ New, W:Add, Z:Discontinued, F:Interchangeable by set, K:Q'ty Change

Copyright (C) 2014 YANMAR CO., LTD. All RightsReserved.

Fig.96. (65B)BILGE PUMP(DX)(OPTIONAL)

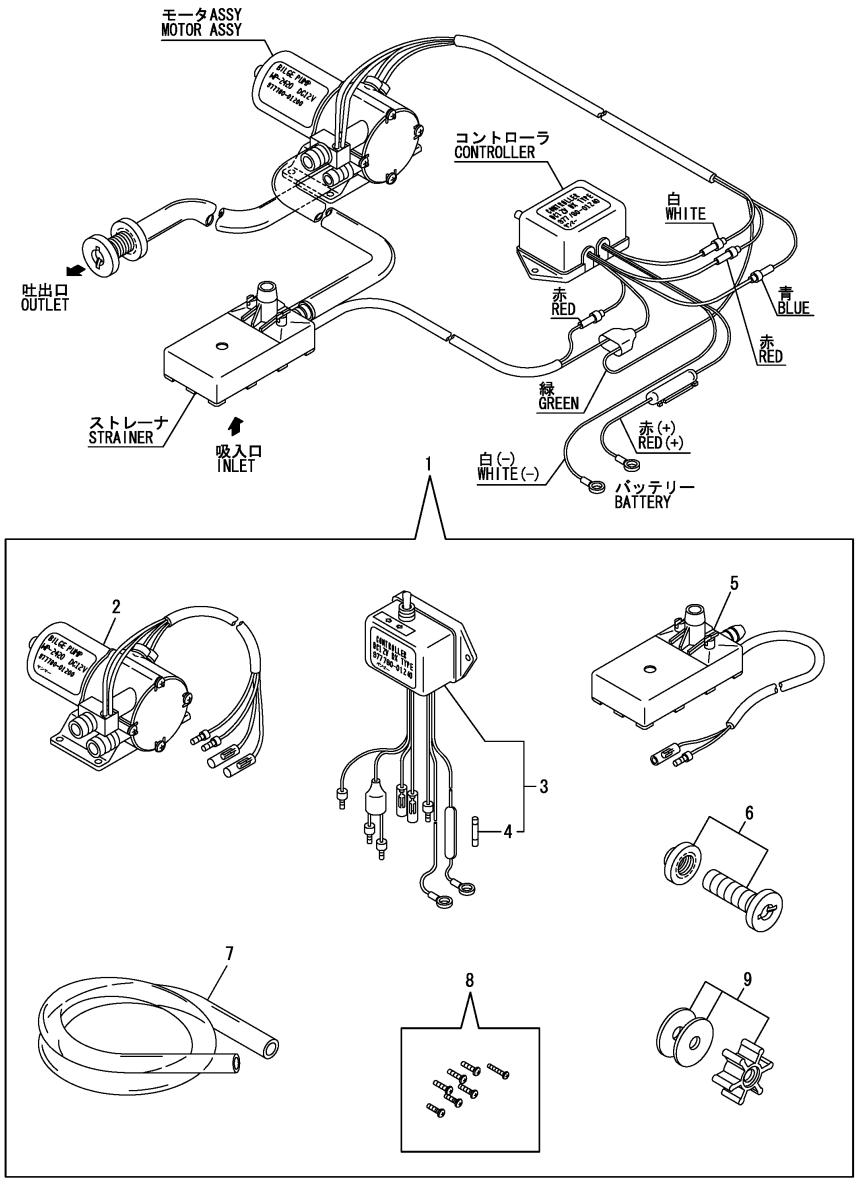

(A)=3JH25A (D)=
(B)=3JH30A (E)=
(C)= (F)=

No.	Lev.	Parts No.	Description	Q'ty (A)	(B)	(C)	(D)	(E)	(F)	I	R
1	1	977780-01200	PUMP(12V).BILGE	1	1					W	
	(A=*1992.08)	(B=*1992.08)									
1-1	1	977780-01211	PUMP ASSY, BILGE	1	1					N	1
	(A=*1997.01)	(B=*1997.01)									
2	2	977780-01230	MOTOR ASSY(BILG PUMP	1	1						
3	2	977780-01240	CONTROLLER	1	1						
4	3	X8636008003	FUSE	1	1						
5	2	X179100011X	STRAINER	1	1						
6	2	X179100100X	PIPE ASSY	1	1						
7	2	X0044021509	HOSE A	1	1						
8	2	X199903800X	SCREW KIT	1	1						
9	2	977780-03000	INPELLER	1	1						

Remarks
* This item is applicable to [(A)(B)=Aug., 1992] or following machines (Refer to Fig.65).
(1)Inner parts are shown in Fig.97(65C).

N:Old $\xleftarrow[\text{No}]{\text{Yes}}$ New, Q:Old $\xleftarrow[\text{Yes}]{\text{No}}$ New, R:Old $\xleftarrow[\text{Yes}]{\text{Yes}}$ New, S:Old $\xleftarrow[\text{No}]{\text{No}}$ New, W:Add, Z:Discontinued, F:Interchangeable by set, K:Q'ty Change

Copyright (C) 2014 YANMAR CO., LTD. All RightsReserved.

Fig.97. (65C)BILGE PUMP(OPTIONAL)

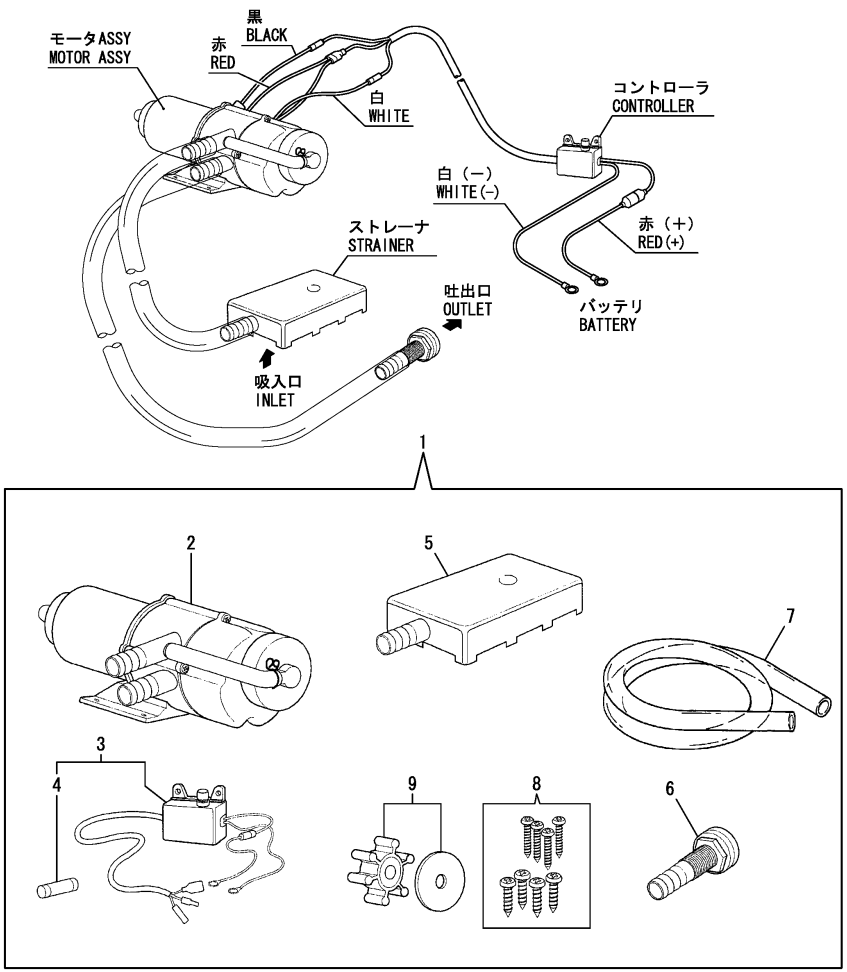

(A)=3JH25A
(B)=3JH30A
(C)=
(D)=
(E)=
(F)=

No.	Lev.	Parts No.	Description	Q'ty (A)	(B)	(C)	(D)	(E)	(F)	I	R
1	1	977780-01211	PUMP ASSY, BILGE	1	1					W	
	(A=*1997.01)	(B=*1997.01)									
2	2	X0318101004	MOTOR ASSY, BILGE	1	1						
3	2	X158606410X	SWITH	1	1						
4	3	X8636015001	FUSE	1	1						
5	2	X179100022X	STRAINER	1	1						
6	2	X179100100X	PIPE ASSY	1	1						
7	2	X0044021509	HOSE A	1	1						
8	2	X199906101X	SCREW SET	1	1						
9	2	977780-03000	INPELLER	1	1						

Remarks
* This item is applicable to [(A)(B)=Jan., 1996] or following machines [Refer to Fig.95(65A), Fig.96(65B)].

N:Old ◄Yes/No► New, Q:Old ◄No/Yes► New, R:Old ◄Yes/Yes► New, S:Old ◄No/No► New, W:Add, Z:Discontinued, F:Interchangeable by set, K:Q'ty Change

Copyright (C) 2014 YANMAR CO., LTD. All RightsReserved.

Fig.66. OIL/WATER SEPARATOR(OPTIONAL)

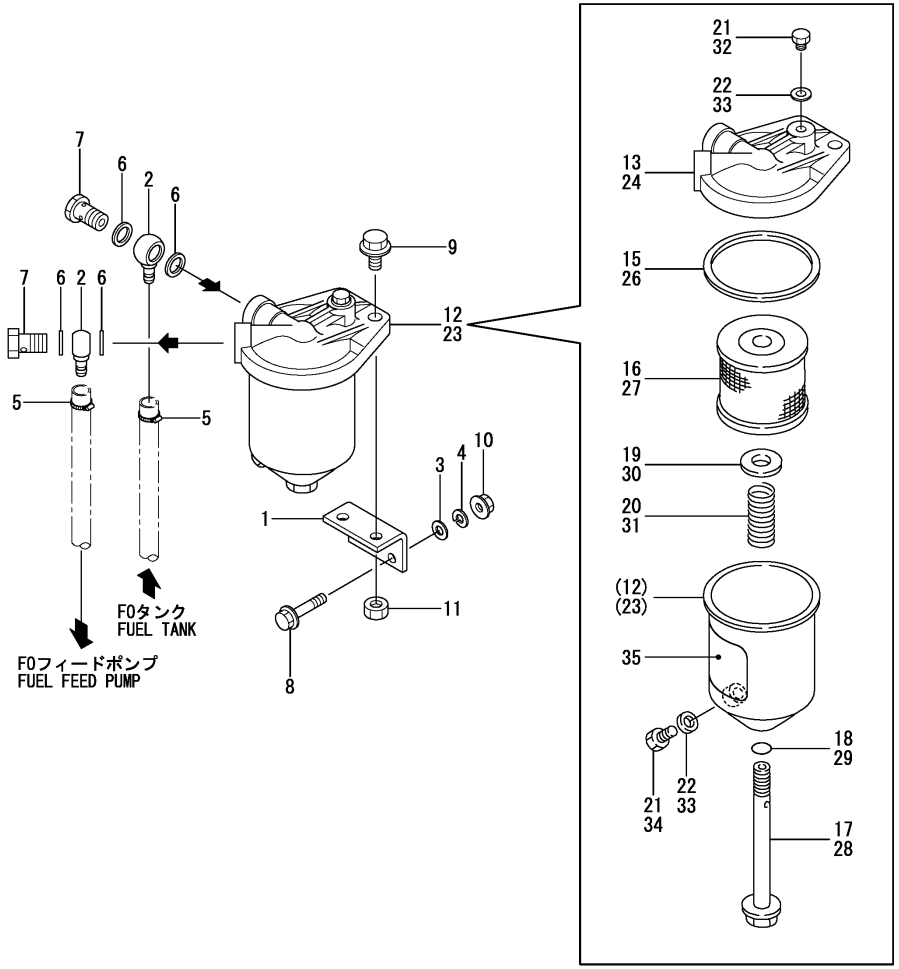

(A)=3JH25A (D)=
(B)=3JH30A (E)=
(C)= (F)=

No.	Lev.	Parts No.	Description	Q'ty (A)	(B)	(C)	(D)	(E)	(F)	I	R
1	1	123672-55811	BRACKET	1	1						
2	1	121750-59910	JOINT, BALL	2	2						
3	1	22137-080000	WASHER, 8	2	2						
4	1	22217-080000	WASHER, SPRING 8	2	2						
5	1	23000-016000	CLAMP, 16	2	2						
6	1	23414-140000	GASKET, 14X1.0	4	4						
7	1	23857-080000	BOLT, JOINT 8	2	2						
8	1	26106-080402	BOLT, M8X 40 PLATED	2	2						
9	1	26106-100202	BOLT, M10X 20 PLATED	2	2						
10	1	26366-080002	NUT, M8	2	2						
10-1	1	26306-080002	NUT, M8	2	2						R
	(A=*2001.04)	(B=*2001.04)									
11	1	26706-100002	NUT, M10	2	2						
12	1	43623-500030	SEPARATOR	1	1						Z
	(A=*1996.01)	(B=*1996.01)									
13	2	X2740134001	COVER ASSY	1	1						
15	2	123325-35140	GASKET	1	1						
16	2	42430-550060	ELEMENT, FUEL OIL	1	1						
17	2	123325-35110	BOLT	1	1						
18	2	24311-000120	O-RING, 1AP12.0	1	1						
19	2	123678-55860	SEAT, SPRING D30/16	1	1						
20	2	X0600160122	SPRING	1	1						
21	2	23887-080002	PLUG 8	2	2						
22	2	23414-080000	GASKET, 8X1.0	2	2						
23	1	120324-55750	SEPARATOR ASSY	1	1						W
	(A=*1996.01)	(B=*1996.01)									
23-1	1	120324-55751	SEPARATOR ASSY	1	1						N
	(A=*2008.08)	(B=*2008.08)									
24	2	X2740134001	COVER ASSY	1	1						Z
	(A=*2008.08)	(B=*2008.08)									
24-1	2	X2740134002	COVER ASSY	1	1						W
	(A=*2008.08)	(B=*2008.08)									
26	2	X0582810173	GASKET	1	1						
27	2	120324-55760	ELEMENT	1	1						
28	2	X0311121522	BOLT	1	1						
29	2	X0580121073	O-RING, 1A P 12.0	1	1						
30	2	X0300120414	SEAT, SPRING	1	1						
31	2	X0600160122	SPRING	1	1						
32	2	X0314080110	PLUG	1	1						
33	2	X0588080273	WASHER	2	2						
34	2	X0313080110	BOLT	1	1						Z
	(A=*2008.08)	(B=*2008.08)									
34-1	2	X0313080922	BOLT	1	1						W
	(A=*2008.08)	(B=*2008.08)									
35	2	X0993070671	LABEL	1	1						Z
	(A=*2008.08)	(B=*2008.08)									
35-1	2	X0993071171	LABEL, CAUTION	1	1						W
	(A=*2008.08)	(B=*2008.08)									

N:Old $\overset{\text{Yes}}{\underset{\text{No}}{\leftrightarrows}}$ New, Q:Old $\overset{\text{No}}{\underset{\text{Yes}}{\leftrightarrows}}$ New, R:Old $\overset{\text{Yes}}{\underset{\text{Yes}}{\leftrightarrows}}$ New, S:Old $\overset{\text{No}}{\underset{\text{No}}{\leftrightarrows}}$ New, W:Add, Z:Discontinued, F:Interchangeable by set, K:Q'ty Change

Copyright (C) 2014 YANMAR CO., LTD. All RightsReserved.

Fig.67. FUEL PIPE(BUNDLED)

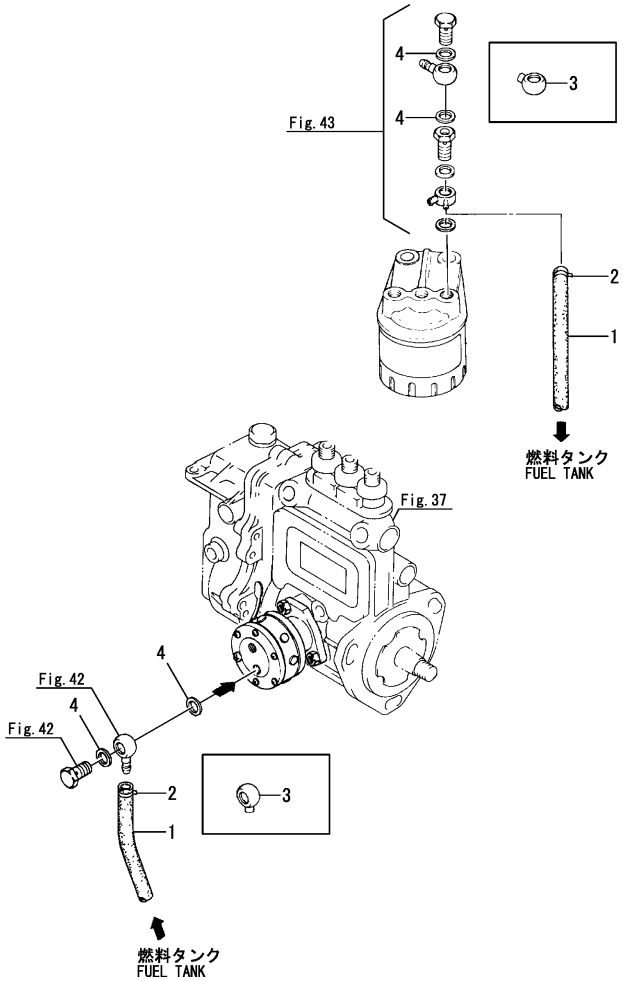

(A)=3JH25A (D)=
(B)=3JH30A (E)=
(C)= (F)=

No.	Lev.	Parts No.	Description	Q'ty (A)	(B)	(C)	(D)	(E)	(F)	I	R
1	1	129795-59100	PIPE, FUEL L=4000	1	1						
2	1	23000-016000	CLAMP, 16	4	4						
3	1	124223-59750	JOINT	2	2					W	1
	(A=E02912)	(B=E01412)									
4	1	22190-080002	WASHER, SEAL 8	4	4					W	1
	(A=E02912)	(B=E01412)									

Remarks
(1)Steel pipe is shipbuliding arranges.

N:Old $\xleftrightarrow[\text{No}]{\text{Yes}}$ New, Q:Old $\xleftrightarrow[\text{Yes}]{\text{No}}$ New, R:Old $\xleftrightarrow[\text{Yes}]{\text{Yes}}$ New, S:Old $\xleftrightarrow[\text{No}]{\text{No}}$ New, W:Add, Z:Discontinued, F:Interchangeable by set, K:Q'ty Change

Copyright (C) 2014 YANMAR CO., LTD. All RightsReserved.

Fig.68. ENGINE STOP CABLE(OPTIONAL)

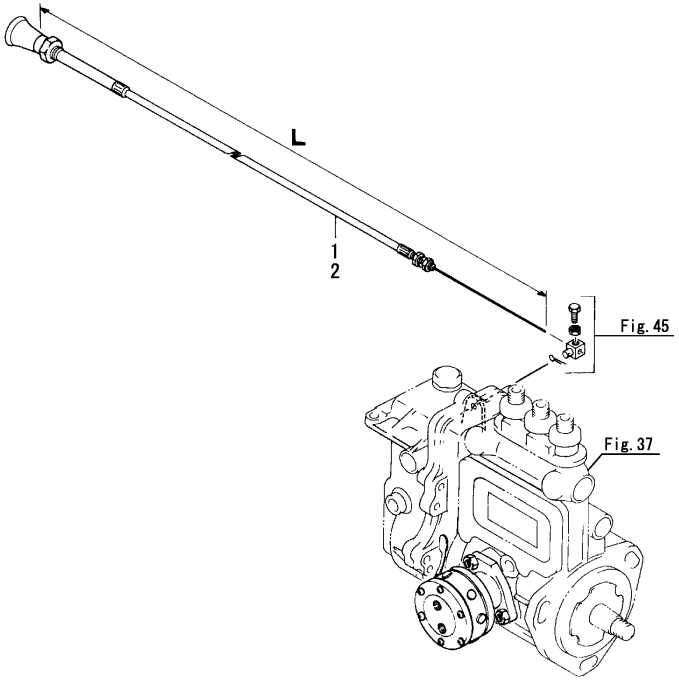

(A)=3JH25A (D)=
(B)=3JH30A (E)=
(C)= (F)=

No.	Lev.	Parts No.	Description	Q'ty (A)	(B)	(C)	(D)	(E)	(F)	I	R
1	1	129470-67550	CABLE, STOP L=4000	1	1						
2	1	129495-67550	CABLE, STOP L=2000	1	1						

N:Old $\xleftarrow[\text{No}]{\text{Yes}}$ New, Q:Old $\xleftarrow[\text{Yes}]{\text{No}}$ New, R:Old $\xleftarrow[\text{Yes}]{\text{Yes}}$ New, S:Old $\xleftarrow[\text{No}]{\text{No}}$ New, W:Add, Z:Discontinued, F:Interchangeable by set, K:Q'ty Change

Copyright (C) 2014 YANMAR CO., LTD. All RightsReserved.

Fig.69. HAND STARTING DEVICE(OPTIONAL)

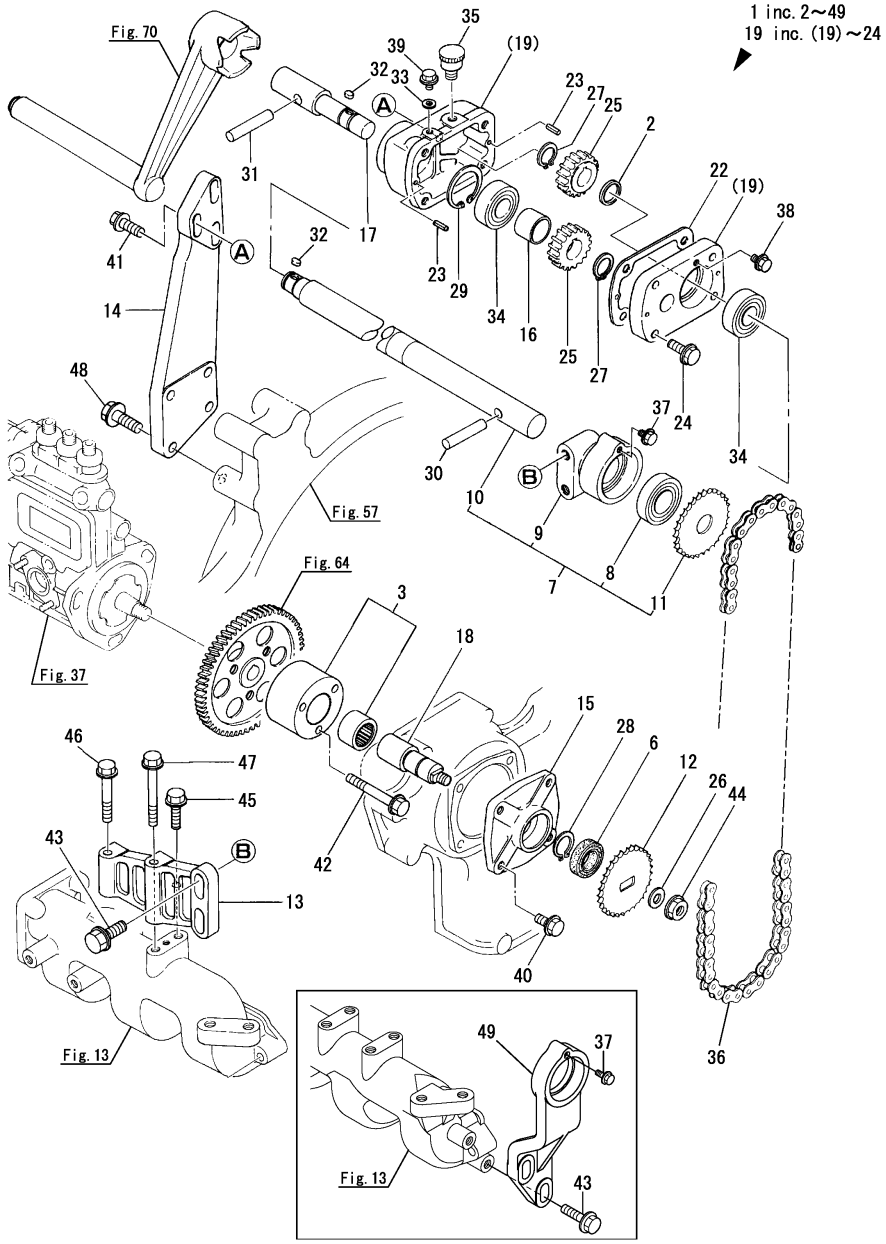

(A)=3JH25A (D)=
(B)=3JH30A (E)=
(C)= (F)=

No.	Lev.	Parts No.	Description	Q'ty (A)	(B)	(C)	(D)	(E)	(F)	I	R
1	1	729198-76710	STARTER ASSY, HAND	1	1						
2	2	145610-39290	COLLAR	1	1						
3	2	129198-76160	JOINT	1	1						
6	2	124770-52180	SEAL, TC20X35X8	1	1						
7	2	129198-76010	SHAFT ASSY, STARTING	1	1						
7-1	2	129198-76011	SHAFT ASSY	1	1					S	1
	(A=*1986.09)	(B=*1986.09)									
8	3	24107-060054	BEARING, BALL 6005ZZ	1	1						
9	3	129198-76130	HOUSING	1	1					Z	1
	(A=*1986.09)	(B=*1986.09)									
10	3	129198-76210	SHAFT, STARTING	1	1						
10-1	3	129198-76211	SHAFT, STARTING	1	1					S	
	(A=*1986.09)	(B=*1986.09)									
11	3	129198-76020	SPROCKET	1	1						
12	2	124770-76100	SPROCKET	1	1						
13	2	129198-76100	BRACKET	1	1					Z	1
	(A=*1986.09)	(B=*1986.09)									
14	2	129198-76110	BRACKET	1	1						
15	2	129198-76180	COVER	1	1						
16	2	104273-76190	COLLAR	1	1						
17	2	129198-76200	SHAFT, STARTING	1	1						
18	2	129198-76220	SHAFT, STARTING	1	1						
19	2	729198-76650	CASE ASSY, GEAR	1	1						
22	3	104273-76290	GASKET, GEAR CASE	1	1						
23	3	22351-040012	PIN, SPRING 4.0X12	2	2						
24	3	26106-080252	BOLT, M8X 25 PLATED	4	4						
25	2	104200-76401	GEAR, STARTING	2	2						
25-1	2	129198-76400	GEAR	2	2					N	
	(A=*1995.06)	(B=*1995.06)									
26	2	22137-100000	WASHER, 10	1	1						
27	2	22242-000180	RING, 18	2	2						
28	2	22242-000200	RING, 20	1	1						
29	2	22252-000420	RING, 42	1	1						
30	2	22312-100500	PIN, PARALLEL M10X50	1	1						
31	2	22312-100500	PIN, PARALLEL M10X50	1	1						
32	2	22512-050120	KEY, 5X 12	2	2						
33	2	23414-060000	GASKET, 6X1.0	1	1						
34	2	24102-060044	BEARING, BALL 6004U	2	2						
35	2	24754-200010	CUP, GREASE 20X1/8	1	1						
36	2	25210-430620	CHAIN, 43X 62	1	1						
37	2	26106-060102	BOLT, M6X 10 PLATED	1	1						
38	2	26106-060102	BOLT, M6X 10 PLATED	1	1						
39	2	26106-060102	BOLT, M6X 10 PLATED	1	1						
40	2	26106-080202	BOLT, M8X 20 PLATED	4	4						
41	2	26106-080252	BOLT, M8X 25 PLATED	3	3						
42	2	26106-080452	BOLT, M8X 45 PLATED	3	3						
43	2	26106-100302	BOLT, M10X 30 PLATED	2	2						
44	2	26376-100002	NUT, M10	1	1						
45	2	26106-080302	BOLT, M8X 30 PLATED	2	2					Z	
	(A=*1986.09)	(B=*1986.09)									
46	2	26106-080552	BOLT, M8X 55 PLATED	1	1					Z	

Remarks
(1)Interchangeable by simultaneous replacement with No.7-1, 49.

N:Old $\xleftarrow[\text{No}]{\text{Yes}}$ New, Q:Old $\xleftarrow[\text{Yes}]{\text{No}}$ New, R:Old $\xleftarrow[\text{Yes}]{\text{Yes}}$ New, S:Old $\xleftarrow[\text{No}]{\text{No}}$ New, W:Add, Z:Discontinued, F:Interchangeable by set, K:Q'ty Change

++ CONTINUE ++

Copyright (C) 2014 YANMAR CO., LTD. All RightsReserved.

Fig.69. HAND STARTING DEVICE(OPTIONAL)

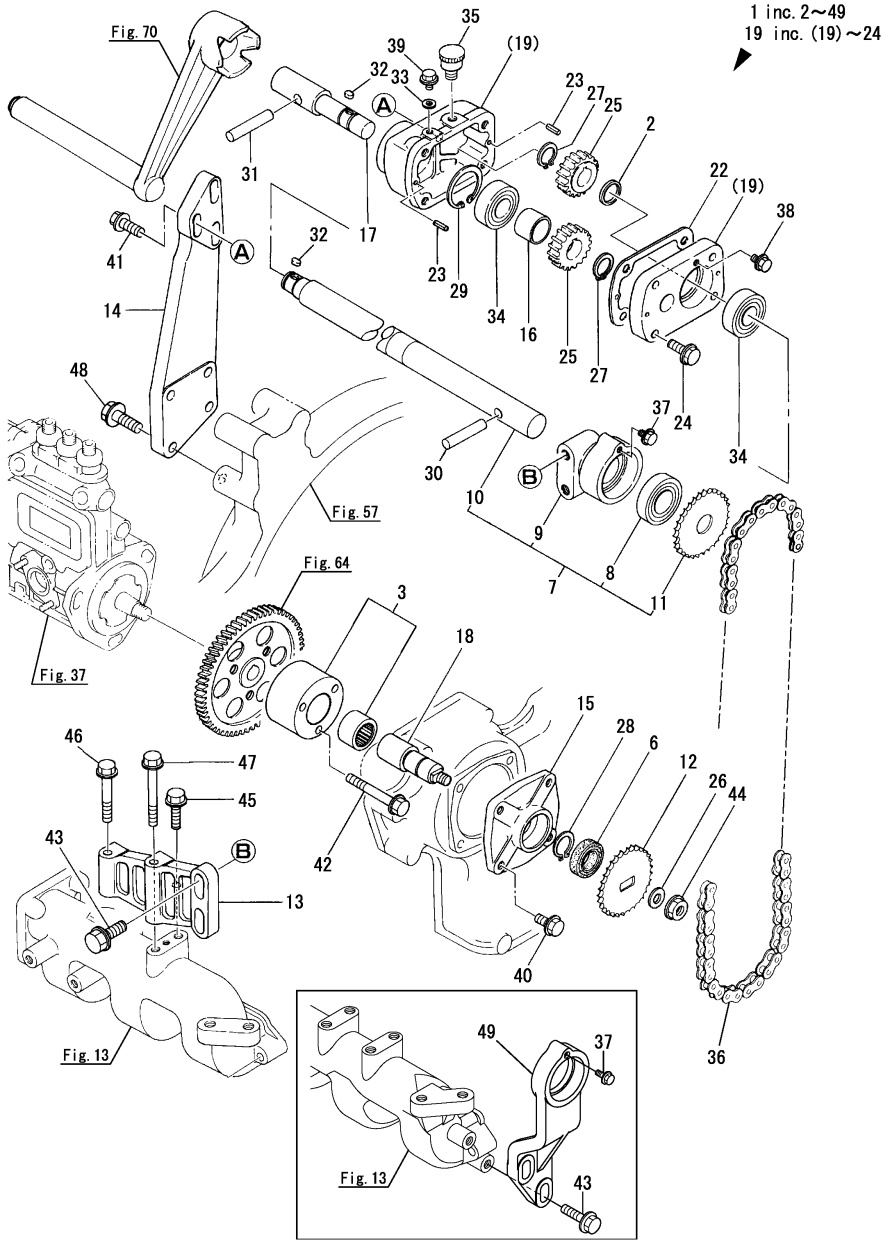

(A)=3JH25A (D)=
(B)=3JH30A (E)=
(C)= (F)=

No.	Lev.	Parts No.	Description	Q'ty (A)	(B)	(C)	(D)	(E)	(F)	I	R
	(A=*1986.09)	(B=*1986.09)									
47	2	26106-080702	BOLT, M8X 70 PLATED	1	1					Z	
	(A=*1986.09)	(B=*1986.09)									
48	2	26106-100302	BOLT, M10X 30 PLATED	4	4						
49	2	129198-76120	BRACKET	1	1					W	1
	(A=*1986.09)	(B=*1986.09)									

Remarks
(1)Interchangeable by simultaneous replacement with No.7-1, 49.

N:Old $\xleftarrow[\text{No}]{\text{Yes}}$ New, Q:Old $\xleftarrow[\text{Yes}]{\text{No}}$ New, R:Old $\xleftarrow[\text{Yes}]{\text{Yes}}$ New, S:Old $\xleftarrow[\text{No}]{\text{No}}$ New, W:Add, Z:Discontinued, F:Interchangeable by set, K:Q'ty Change

Copyright (C) 2014 YANMAR CO., LTD. All RightsReserved.

Fig.70. START HANDLE(WITH HAND STARTING SPEC)(OPTIONAL)

(A)=3JH25A
(B)=3JH30A
(C)=
(D)=
(E)=
(F)=

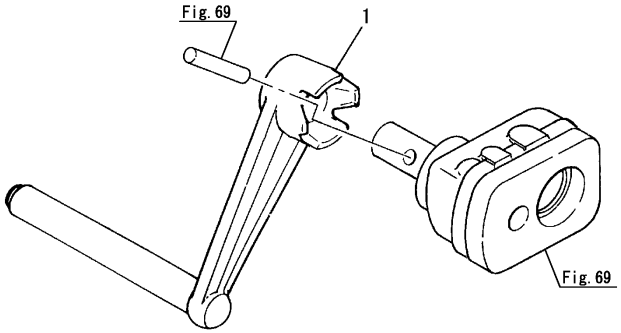

No.	Lev.	Parts No.	Description	Q'ty (A)	(B)	(C)	(D)	(E)	(F)	I	R
1	1	123340-76790	HANDLE, STARTING	1	1						

N:Old ◄Yes/No► New, Q:Old ◄No/Yes► New, R:Old ◄Yes/Yes► New, S:Old ◄No/No► New, W:Add, Z:Discontinued, F:Interchangeable by set, K:Q'ty Change

Copyright (C) 2014 YANMAR CO., LTD. All RightsReserved.

Fig.71. SINGLE LEVER CONTROL(OPTIONAL)

(A)=3JH25A
(B)=3JH30A
(C)=
(D)=
(E)=
(F)=

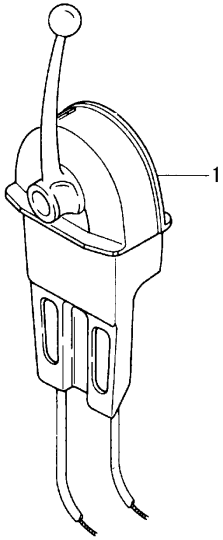

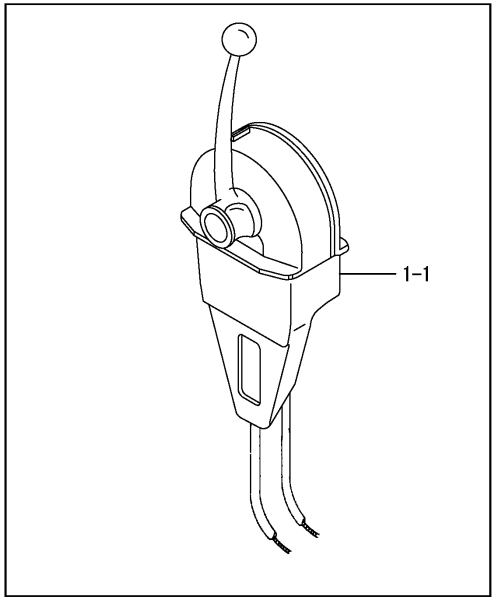

No.	Lev.	Parts No.	Description	Q'ty (A)	(B)	(C)	(D)	(E)	(F)	I	R
1	1	41730-000680	HEAD, REMOTE-CONTROL	1	1						
1-1	1	41730-000681	MT-3 REMO-CON	1	1					S	
	(A=*1992.04)		(B=*1992.04)								

N:Old ◄Yes/No► New, Q:Old ◄No/Yes► New, R:Old ◄Yes/Yes► New, S:Old ◄No/No► New, W:Add, Z:Discontinued, F:Interchangeable by set, K:Q'ty Change

Copyright (C) 2014 YANMAR CO., LTD. All RightsReserved.

Fig.72. MORSE CABLE(OPTIONAL)

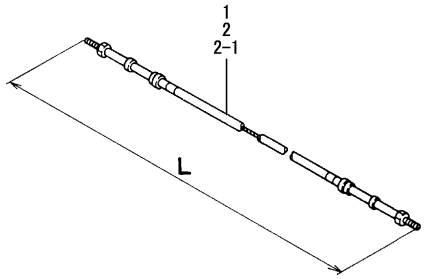

Remarks
(1)L=7000mm
(2)L=4000mm
(3)L=1400mm

(A)=3JH25A (D)=
(B)=3JH30A (E)=
(C)= (F)=

No.	Lev.	Parts No.	Description	Q'ty (A)	(B)	(C)	(D)	(E)	(F)	I	R
1	1	129470-86500	CABLE, L=7000	2	2						1
2	1	41710-000380	CABLE L=4000	2	2						2
2-1	1	27730-301400	CABLE (L=4000)	2	2					R	3

(A=*2012.07) (B=*2012.07)

N:Old $\xleftarrow[\text{No}]{\text{Yes}}$ New, Q:Old $\xleftarrow[\text{Yes}]{\text{No}}$ New, R:Old $\xleftarrow[\text{Yes}]{\text{Yes}}$ New, S:Old $\xleftarrow[\text{No}]{\text{No}}$ New, W:Add, Z:Discontinued, F:Interchangeable by set, K:Q'ty Change

Copyright (C) 2014 YANMAR CO., LTD. All RightsReserved.

Fig.73. FRONT DRIVING DEVICE(OPTIONAL)

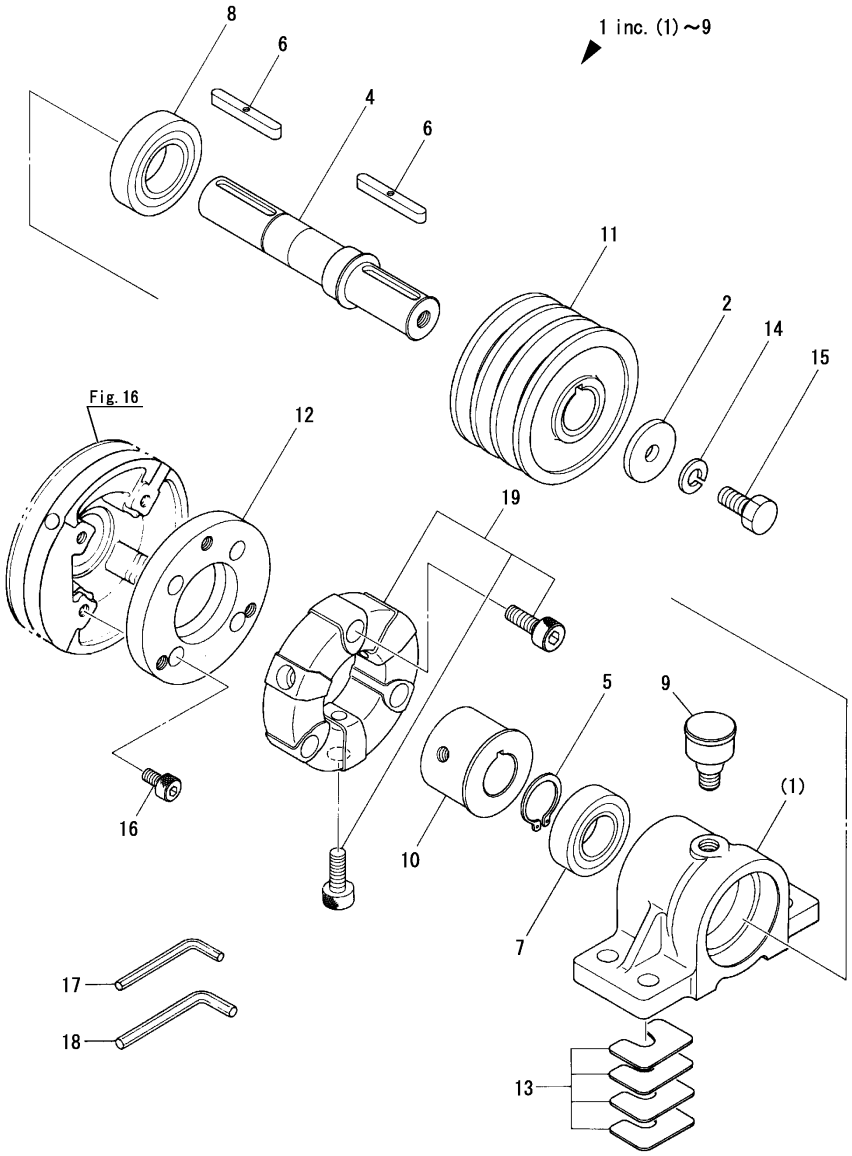

(A)=3JH25A
(B)=3JH30A
(C)=
(D)=
(E)=
(F)=

No.	Lev.	Parts No.	Description	Q'ty (A)	(B)	(C)	(D)	(E)	(F)	I	R
1	1	124790-89200	BEARING ASSY	1	1						
2	2	124060-21660	WASHER	1	1						
4	2	124790-89210	SHAFT, PTO	1	1						
5	2	22242-000300	RING, 30	1	1						
6	2	22512-070552	KEY, 7X 55	2	2						
7	2	24102-062064	BEARING, BALL 6206U	1	1						
8	2	24102-062074	BEARING, BALL 6207U	1	1						
9	2	24754-320020	CUP, GREASE 32X1/4	1	1						
10	1	124790-89230	HUB	1	1						
11	1	124790-89250	V-PULLEY	1	1						
12	1	129198-89260	FLANGE	1	1						
13	1	124790-89800	SHIM SET	1	1						
14	1	22212-120000	SPRING WASHER 12	1	1						
15	1	26156-120252	BOLT, M12X 25 PLATED	1	1						
16	1	26450-080162	BOLT, M8X 16	4	4						
17	1	28150-060000	WRENCH, BAR 6	1	1						
18	1	28150-080000	WRENCH, BAR 8	1	1						
19	1	45423-500731	JOINT	1	1						

N:Old $\xleftrightarrow[\text{No}]{\text{Yes}}$ New, Q:Old $\xleftrightarrow[\text{Yes}]{\text{No}}$ New, R:Old $\xleftrightarrow[\text{Yes}]{\text{Yes}}$ New, S:Old $\xleftrightarrow[\text{No}]{\text{No}}$ New, W:Add, Z:Discontinued, F:Interchangeable by set, K:Q'ty Change

Copyright (C) 2014 YANMAR CO., LTD. All RightsReserved.

Fig.74. SPECIAL TOOLS(OPTIONAL)

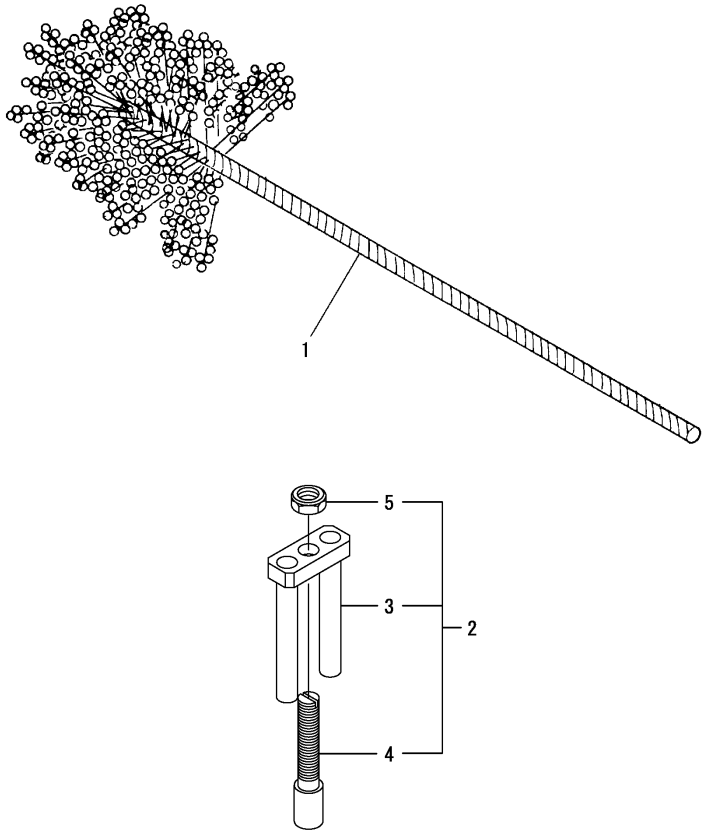

(A)=3JH25A (D)=
(B)=3JH30A (E)=
(C)= (F)=

No.	Lev.	Parts No.	Description	Q'ty (A)	(B)	(C)	(D)	(E)	(F)	I	R
1	1	129400-92420	HONE, FLEX	1	1						
2	1	129470-92300	TOOL ASSY, NOZZLE	1	1					W	
	(A=*1987.07)	(B=*1987.07)									
3	2	129470-92310	TOOL,NOZZLE REMOVE A	1	1					W	
	(A=*1987.07)	(B=*1987.07)									
4	2	129470-92320	TOOL,NOZZLE REMOVE B	1	1					W	
	(A=*1987.07)	(B=*1987.07)									
5	2	26716-120002	NUT, M12	1	1					W	
	(A=*1987.07)	(B=*1987.07)									

N:Old $\xleftrightarrow[\text{No}]{\text{Yes}}$ New, Q:Old $\xleftrightarrow[\text{Yes}]{\text{No}}$ New, R:Old $\xleftrightarrow[\text{Yes}]{\text{Yes}}$ New, S:Old $\xleftrightarrow[\text{No}]{\text{No}}$ New, W:Add, Z:Discontinued, F:Interchangeable by set, K:Q'ty Change

Copyright (C) 2014 YANMAR CO., LTD. All RightsReserved.

Fig.75. REPAIR PARTS

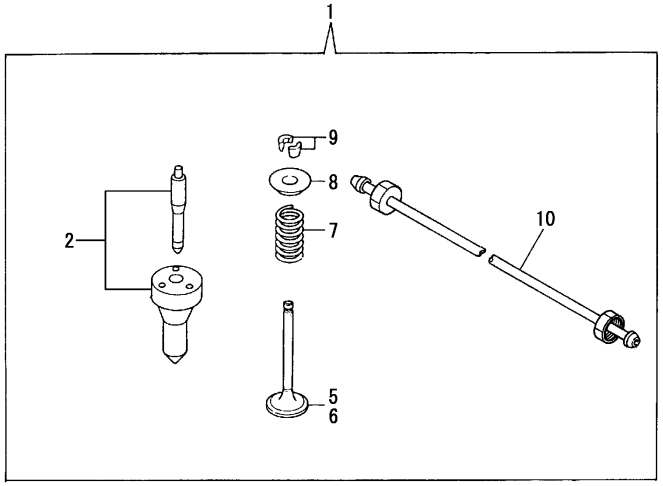

(A)=3JH25A (D)=
(B)=3JH30A (E)=
(C)= (F)=

No.	Lev.	Parts No.	Description	Q'ty (A)	(B)	(C)	(D)	(E)	(F)	I	R
1	1	729198-92500	PARTS KIT, SPARE	1	1						
2	2	129100-53000	NOZZLE ASSY, F.I.	1	1						
5	2	129100-11100	VALVE, SUCTION	1	1						
6	2	129100-11110	VALVE, EXHAUST	1	1						
6-1	2	129100-11111	VALVE, EXHAUST	1	1					R	
	(A=E01299)	(B=E01259)									
6-2	2	129100-11112	VALVE, EXHAUST	1	1					R	
	(A=E01964)	(B=E01950)									
7	2	129795-11120	SPRING, VALVE	2	2						
8	2	129795-11180	RETAINER, SPRING	2	2						
9	2	103338-11190	COTTER	2	2						
9-1	2	27310-080001	COTTER, 8	2	2					R	
	(A=*1994.10)	(B=*1994.10)									
10	2	129198-59810	PIPE ASSY, INJECTION	1	1						

N:Old $\xleftrightarrow[\text{No}]{\text{Yes}}$ New, Q:Old $\xleftrightarrow[\text{Yes}]{\text{No}}$ New, R:Old $\xleftrightarrow[\text{Yes}]{\text{Yes}}$ New, S:Old $\xleftrightarrow[\text{No}]{\text{No}}$ New, W:Add, Z:Discontinued, F:Interchangeable by set, K:Q'ty Change

Copyright (C) 2014 YANMAR CO., LTD. All RightsReserved.

Fig.98. (75A)REPAIR PARTS(FRESH-SEA WATER SPEC)

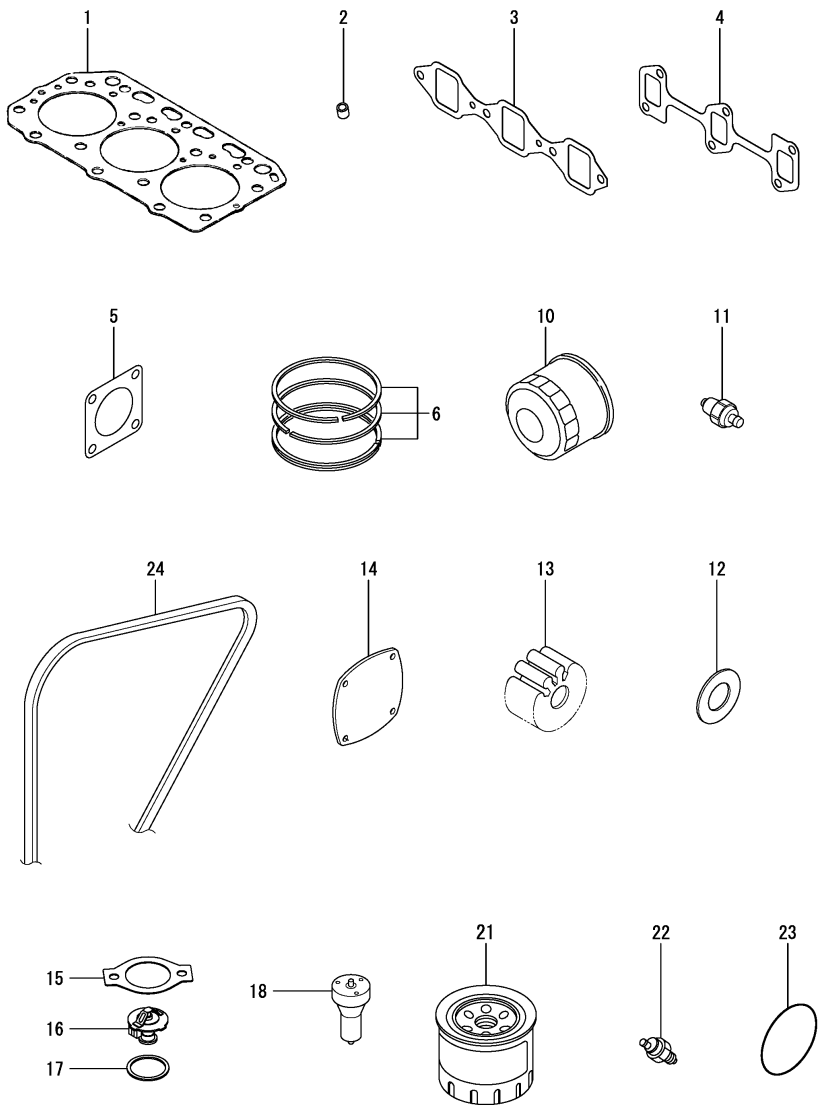

(A)=3JH25A (D)=
(B)=3JH30A (E)=
(C)= (F)=

No.	Lev.	Parts No.	Description	Q'ty (A)	(B)	(C)	(D)	(E)	(F)	I	R
1	1	129171-01330	GASKET, HEAD T=1.4	1	1						
2	1	119625-11870	PROTECTOR, NOZZLE	3	3						
3	1	129150-12111	GASKET, MANIFOLD	1	1						
4	1	129150-13110	GASKET, EXH.MANIFOLD	1	1						
5	1	129472-18090	GASKET	1	1						
6	1	729120-22500	RING SET, PISTON	3	3						
10	1	129150-35153	FILTER ASSY, D80X80L	1	1						1
10-1	1	129150-35170	FILTER,LO	1	1					R	2
11	1	121252-39450	SWITCH, HYDRAULIC	1	1						
12	1	129198-42520	PLATE	1	1						
13	1	129470-42532	IMPELLER	1	1						
14	1	129198-42540	COVER	1	1						
15	1	129795-49551	GASKET	1	1						
16	1	129470-49801	THERMOSTAT, 76.5	1	1						
17	1	129150-49811	GASKET, THERMOSTAT	1	1						
18	1	129100-53000	NOZZLE ASSY, F.I.	3	3						
21	1	129470-55703	FILTER, FUEL	1	1						1
21-1	1	129470-55810	FILTER, FUEL	1	1					R	2
22	1	127610-91350	SWITCH, 95	1	1						
23	1	24341-000600	O-RING, 1AS60.0	1	1						
24	1	25132-004500	V-BELT, A45	1	1						

Remarks
(1)Non-branded filter(without Yanmar logo).
(2)Branded filter(with Yanmar logo).

N:Old $\xleftrightarrow[\text{No}]{\text{Yes}}$ New, Q:Old $\xleftrightarrow[\text{Yes}]{\text{No}}$ New, R:Old $\xleftrightarrow[\text{Yes}]{\text{Yes}}$ New, S:Old $\xleftrightarrow[\text{No}]{\text{No}}$ New, W:Add, Z:Discontinued, F:Interchangeable by set, K:Q'ty Change

Copyright (C) 2014 YANMAR CO., LTD. All RightsReserved.

Fig.99. (75B)REPAIR PARTS(KEEL COOLER SPEC)

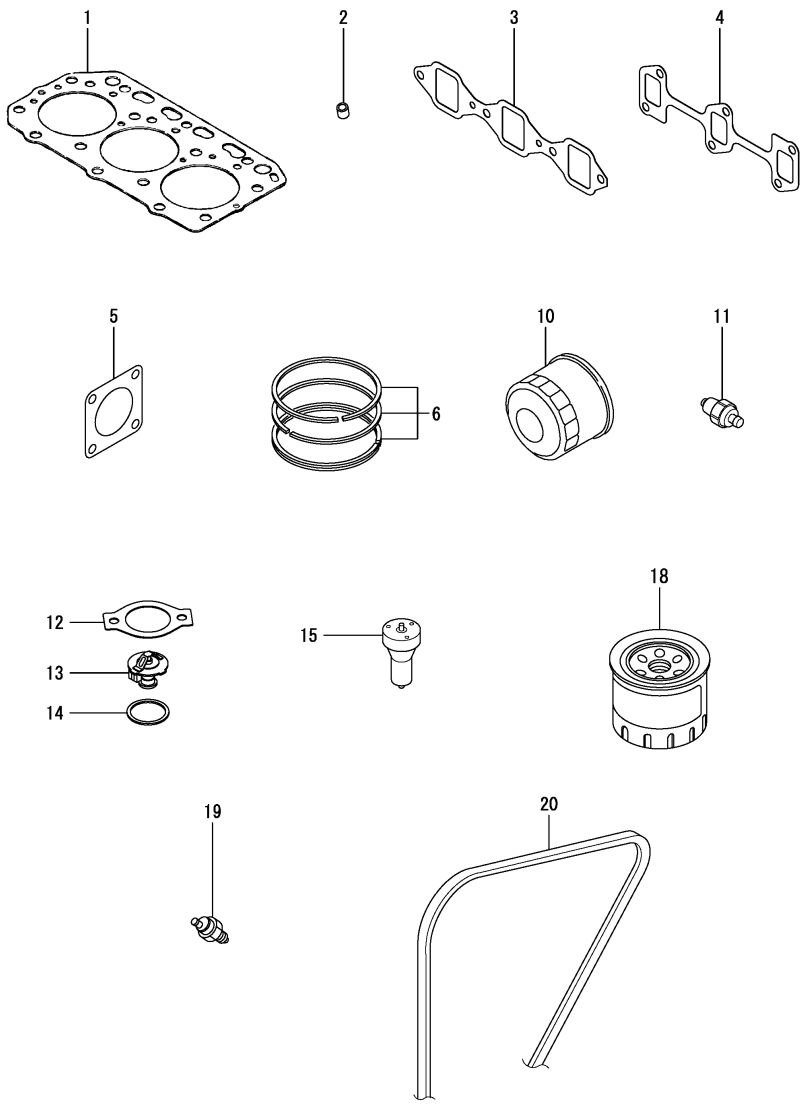

(A)=3JH25A (D)=
(B)=3JH30A (E)=
(C)= (F)=

No.	Lev.	Parts No.	Description	Q'ty (A)	(B)	(C)	(D)	(E)	(F)	I	R
1	1	129171-01330	GASKET, HEAD T=1.4	1	1						
2	1	119625-11870	PROTECTOR, NOZZLE	3	3						
3	1	129150-12111	GASKET, MANIFOLD	1	1						
4	1	129150-13110	GASKET, EXH.MANIFOLD	1	1						
5	1	129472-18090	GASKET	1	1						
6	1	729120-22500	RING SET, PISTON	3	3						
10	1	129150-35153	FILTER ASSY, D80X80L	1	1						1
10-1	1	129150-35170	FILTER,LO	1	1					R	2
11	1	121252-39450	SWITCH, HYDRAULIC	1	1						
12	1	129795-49551	GASKET	1	1						
13	1	129470-49801	THERMOSTAT, 76.5	1	1						
14	1	129150-49811	GASKET, THERMOSTAT	1	1						
15	1	129100-53000	NOZZLE ASSY, F.I.	3	3						
18	1	129470-55703	FILTER, FUEL	1	1						1
18-1	1	129470-55810	FILTER, FUEL	1	1					R	2
19	1	127610-91350	SWITCH, 95	1	1						
20	1	25132-004500	V-BELT, A45	1	1						

Remarks
(1)Non-branded filter(without Yanmar logo).
(2)Branded filter(with Yanmar logo).

N:Old $\xleftrightarrow[\text{No}]{\text{Yes}}$ New, Q:Old $\xleftrightarrow[\text{Yes}]{\text{No}}$ New, R:Old $\xleftrightarrow[\text{Yes}]{\text{Yes}}$ New, S:Old $\xleftrightarrow[\text{No}]{\text{No}}$ New, W:Add, Z:Discontinued, F:Interchangeable by set, K:Q'ty Change

Copyright (C) 2014 YANMAR CO., LTD. All RightsReserved.

Fig.76. GASKET SET(OPTIONAL)

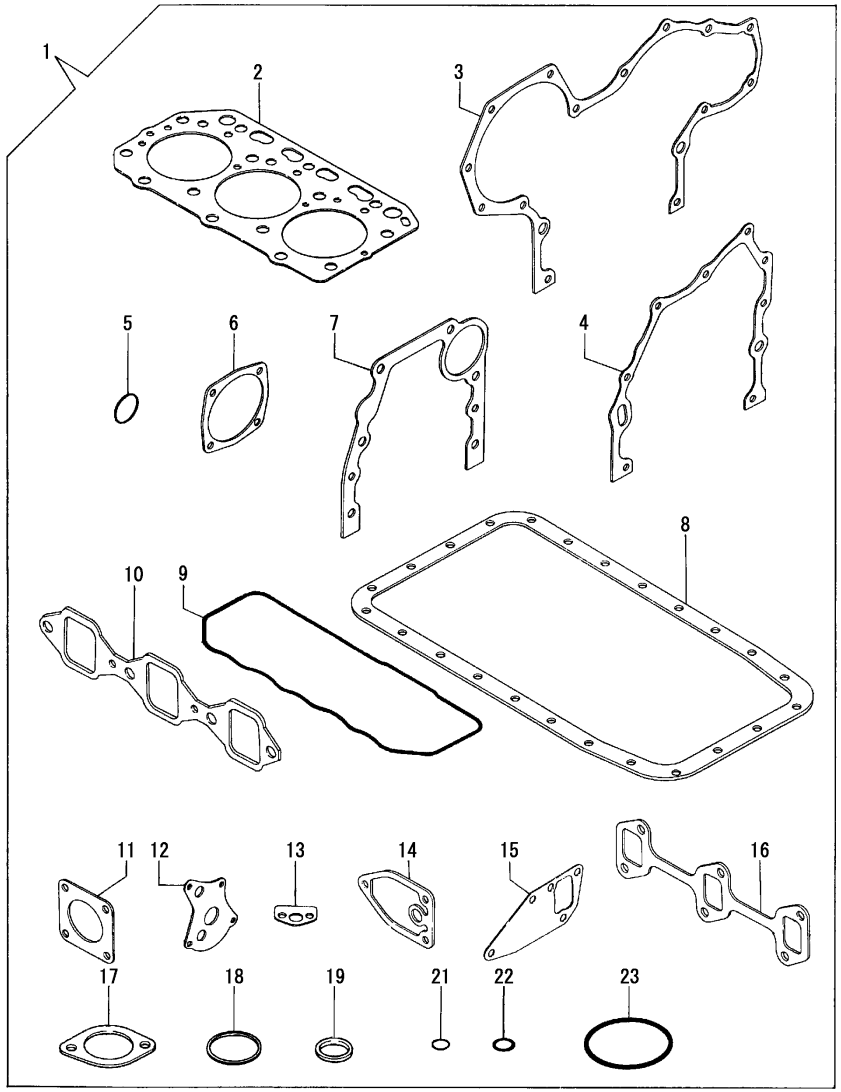

(A)=3JH25A (D)=
(B)=3JH30A (E)=
(C)= (F)=

No.	Lev.	Parts No.	Description	Q'ty (A)	(B)	(C)	(D)	(E)	(F)	I	R
1	1	729198-92600	GASKET SET	1	1						
1-1	1	729198-92605	GASKET SET	1	1					N	
	(A=E00632)	(B=E00595)									
2	2	129156-01332	GASKET, HEAD	1	1						
2-1	2	129171-01330	GASKET, HEAD T=1.4	1	1					N	
	(A=*1992.03)	(B=*1992.03)									
3	2	129150-01510	GASKET, GEAR CASE	1	1						
3-1	2	129470-01510	GASKET, GEAR CASE	1	1					N	
	(A=*1988.07)	(B=*1988.07)									
3-2	2	129150-01511	GASKET, GEAR CASE	1	1					R	
	(A=E00632)	(B=E00595)									
4	2	129150-01530	GASKET, GEAR CASE	1	1						
4-1	1	129470-01530	GASKET	1	1					N	
	(A=*1988.07)	(B=*1988.07)									
4-2	1	129470-01531	GASKET	1	1					R	
	(A=*1991.12)	(B=*1991.12)									
4-3	1	129150-01531	GASKET, GEAR CASE	1	1					R	
	(A=E00632)	(B=E00595)									
5	2	24311-000160	O-RING, 1AP16.0	2	2						
6	2	129150-01880	GASKET	3	3						
6-1	2	129150-01881	GASKET	3	3					R	
	(A=*1990.08)	(B=*1990.08)									
6-2	2	129C26-01890	GASKET, HO-P	3	3					R	
	(A=E08549)	(B=E08525)									
7	2	129100-01620	GASKET	1	1						
7-1	1	129470-01620	GASKET	1	1					N	
	(A=*1988.07)	(B=*1988.07)									
7-2	2	129100-01621	GASKET, FLANGE	1	1					R	
	(A=E00632)	(B=E00595)									
8	2	129170-01750	GASKET, OIL SUMP	2	2						
8-1	2	129198-01750	GASKET, OIL SUMP	2	2					N	
	(A=E00632)	(B=E00595)									
9	2	129150-11310	GASKET, BONNET	1	1						
10	2	129150-12110	GASKET, MANIFOLD	1	1						
10-1	2	129150-12111	GASKET, MANIFOLD	1	1					N	
	(A=*1990.08)	(B=*1990.08)									
11	2	129792-18090	GASKET	1	1						
11-1	2	129472-18090	GASKET	1	1					N	
	(A=*1988.07)	(B=*1988.07)									
12	2	129150-32020	GASKET, PUMP	1	1						
13	2	129150-35040	GASKET	2	2						
13-1	2	129150-35041	GASKET	1	1					K	
	(A=E00106)	(B=E00111)									
13-2	2	129150-35042	GASKET	1	1					N	
	(A=E00632)	(B=E00595)									
14	2	129150-35110	GASKET	2	2						
14-1	2	129150-35111	GASKET	2	2					N	
	(A=E01564)	(B=E01557)									
15	2	129150-42020	GASKET, WATER PUMP	1	1						
15-1	2	129150-42059	GASKET	1	1					R	
	(A=E01410)	(B=E01370)									

N:Old $\overset{\text{Yes}}{\underset{\text{No}}{\leftrightarrows}}$ New, Q:Old $\overset{\text{No}}{\underset{\text{Yes}}{\leftrightarrows}}$ New, R:Old $\overset{\text{Yes}}{\underset{\text{Yes}}{\leftrightarrows}}$ New, S:Old $\overset{\text{No}}{\underset{\text{No}}{\leftrightarrows}}$ New, W:Add, Z:Discontinued, F:Interchangeable by set, K:Q'ty Change

++ CONTINUE ++

Copyright (C) 2014 YANMAR CO., LTD. All RightsReserved.

Fig.76. GASKET SET(OPTIONAL)

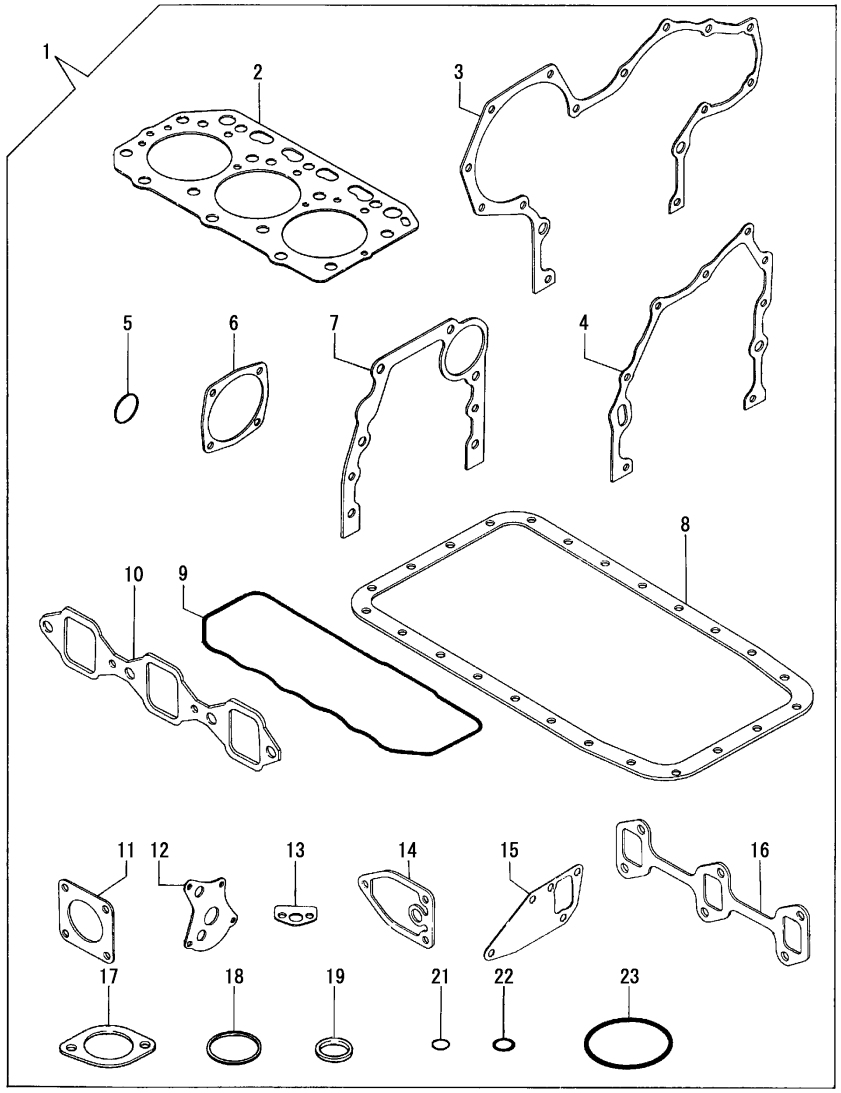

(A)=3JH25A (D)=
(B)=3JH30A (E)=
(C)= (F)=

No.	Lev.	Parts No.	Description	Q'ty (A)	(B)	(C)	(D)	(E)	(F)	I	R
16	2	129150-13110	GASKET, EXH.MANIFOLD	1	1						
17	2	129795-49550	GASKET	1	1						
17-1	2	129795-49551	GASKET	1	1					N	
	(A=*1993.04)	(B=*1993.04)									
18	2	129150-49810	GASKET, THERMOSTAT	1	1						
18-1	2	129150-49811	GASKET, THERMOSTAT	1	1					R	
	(A=E06608)	(B=E06607)									
19	2	129155-52050	GASKET	1	1						
19-1	2	129155-52051	GASKET	1	1					N	
	(A=E00155)	(B=E00160)									
21	2	24311-000160	O-RING, 1AP16.0	1	1						
22	2	24311-000200	O-RING, 1AP20.0	1	1						
23	2	24321-000750	O-RING, 1AG75.0	2	2						

N:Old $\xleftarrow[\text{No}]{\text{Yes}}$ New, Q:Old $\xleftarrow[\text{Yes}]{\text{No}}$ New, R:Old $\xleftarrow[\text{Yes}]{\text{Yes}}$ New, S:Old $\xleftarrow[\text{No}]{\text{No}}$ New, W:Add, Z:Discontinued, F:Interchangeable by set, K:Q'ty Change

Copyright (C) 2014 YANMAR CO., LTD. All RightsReserved.

Fig.86. (76A)SAFETY LABELS

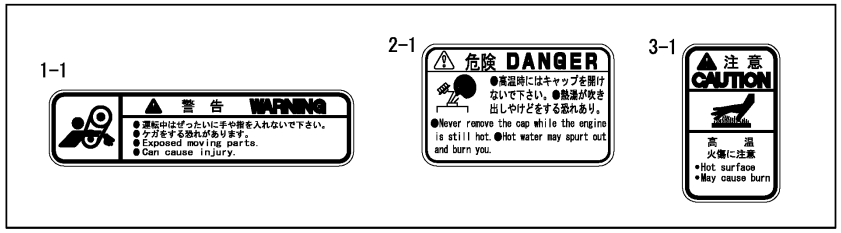

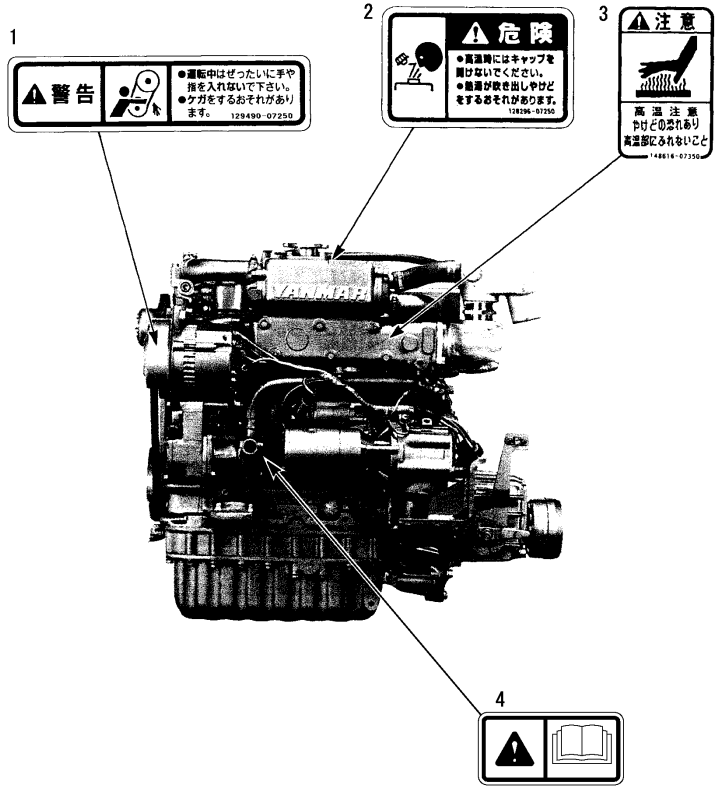

(A)=3JH25A (D)=
(B)=3JH30A (E)=
(C)= (F)=

No.	Lev.	Parts No.	Description	Q'ty (A)	(B)	(C)	(D)	(E)	(F)	I	R
1	1	129490-07250	LABEL, CAUTION	1	1						
1-1	1	128296-07360	LABEL, CAUTION	1	1					N	
	(A=*1996.12)	(B=*1996.12)									
2	1	128296-07250	LABEL, CAUTION	1	1						
2-1	1	128296-07260	LABEL, DANGER	1	1					N	
	(A=*1996.12)	(B=*1996.12)									
3	1	148616-07350	LABEL, CAUTION	1	1						
3-1	1	128296-07300	LABEL, DANGER	1	1					N	
	(A=*1996.12)	(B=*1996.12)									
4	1	196630-12980	LABEL, CAUTION	1	1					W	
	(A=*1996.12)	(B=*1996.12)									

N:Old $\xleftarrow[\text{No}]{\text{Yes}}$ New, Q:Old $\xleftarrow[\text{Yes}]{\text{No}}$ New, R:Old $\xleftarrow[\text{Yes}]{\text{Yes}}$ New, S:Old $\xleftarrow[\text{No}]{\text{No}}$ New, W:Add, Z:Discontinued, F:Interchangeable by set, K:Q'ty Change

Copyright (C) 2014 YANMAR CO., LTD. All RightsReserved.

Fig.100. (76B)SAFETY LABELS(BUNDLED)

(A)=3JH25A (D)=
(B)=3JH30A (E)=
(C)= (F)=

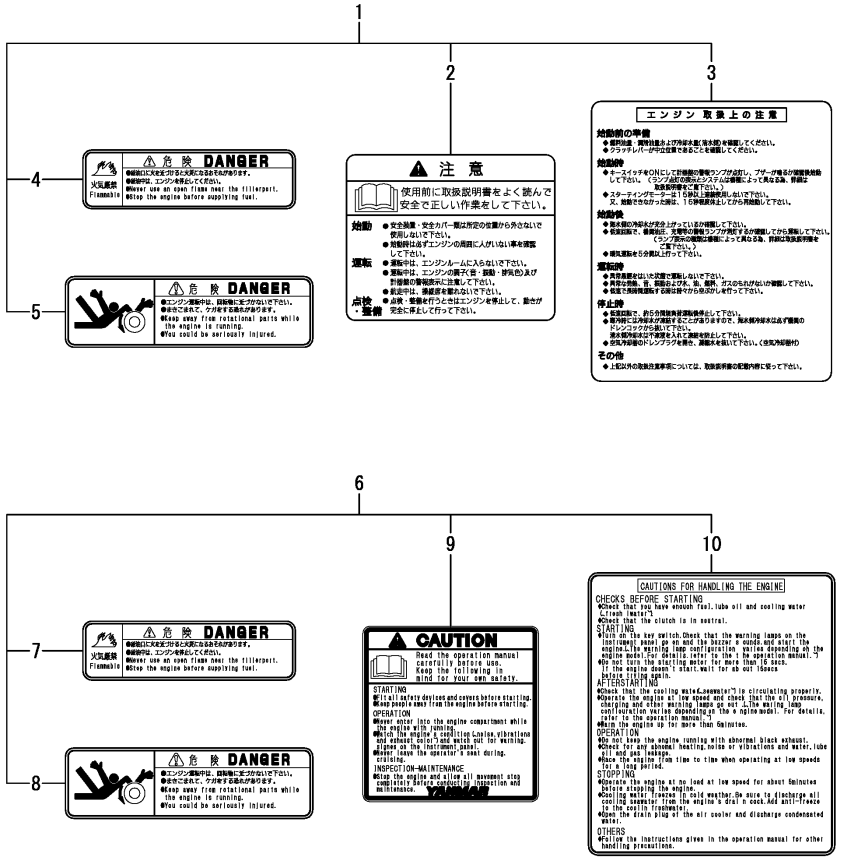

No.	Lev.	Parts No.	Description	Q'ty (A)	(B)	(C)	(D)	(E)	(F)	I	R
1	1	120324-07190	LABEL SET	1	1					W	
	(A=*1996.12)	(B=*1996.12)									
2	2	120324-07200	LABEL, CAUTION	1	1					W	
	(A=*1996.12)	(B=*1996.12)									
3	2	120324-07210	LABEL, CAUTION	1	1					W	
	(A=*1996.12)	(B=*1996.12)									
4	2	128296-07400	LABEL, DANGER	2	2					W	
	(A=*1996.12)	(B=*1996.12)									
5	2	128296-07420	LABEL, DANGER	1	1					W	
	(A=*1996.12)	(B=*1996.12)									
6	1	128296-07190	LABEL,LOOSE PARTS	1	1					W	
	(A=*1996.12)	(B=*1996.12)									
7	2	128296-07400	LABEL, DANGER	2	2					W	
	(A=*1996.12)	(B=*1996.12)									
8	2	128296-07420	LABEL, DANGER	1	1					W	
	(A=*1996.12)	(B=*1996.12)									
9	2	128296-07450	LABEL, CAUTION	1	1					W	
	(A=*1996.12)	(B=*1996.12)									
10	2	128296-07460	LABEL, CAUTION	1	1					W	
	(A=*1996.12)	(B=*1996.12)									

N:Old $\overset{\text{Yes}}{\underset{\text{No}}{\leftrightarrows}}$ New, Q:Old $\overset{\text{No}}{\underset{\text{Yes}}{\leftrightarrows}}$ New, R:Old $\overset{\text{Yes}}{\underset{\text{Yes}}{\leftrightarrows}}$ New, S:Old $\overset{\text{No}}{\underset{\text{No}}{\leftrightarrows}}$ New, W:Add, Z:Discontinued, F:Interchangeable by set, K:Q'ty Change

Copyright (C) 2014 YANMAR CO., LTD. All RightsReserved.

Fig.87. (76C)FREE FALL SPEC.

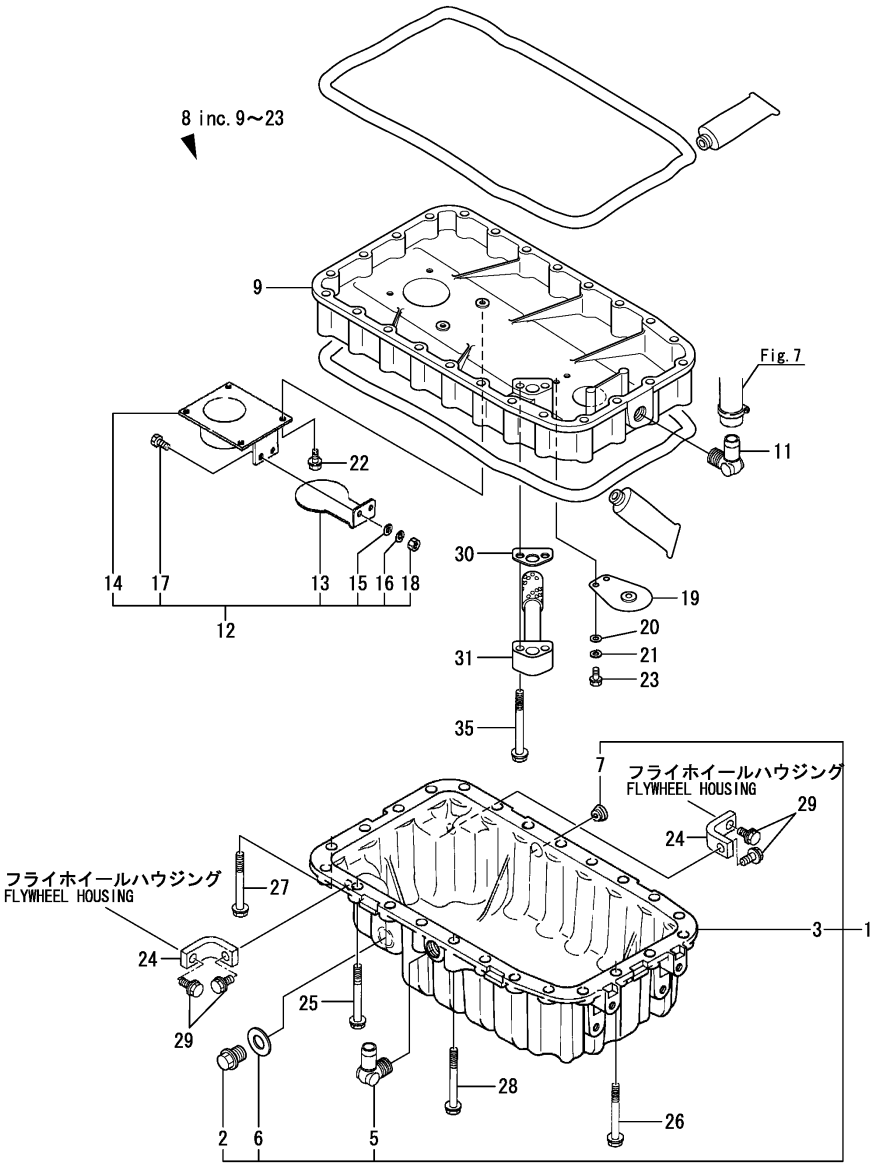

(A)=3JH25A (D)=
(B)=3JH30A (E)=
(C)= (F)=

No.	Lev.	Parts No.	Description	Q'ty (A)	(B)	(C)	(D)	(E)	(F)	I	R
1	1	129198-01700	SUMP ASSY, OIL	1	1					W	
	(A=E00695)	(B=E00687)									
2	2	105425-01690	PLUG, M16	1	1						
3	2	129170-01701	SUMP, OIL	1	1						
5	2	129198-01791	ELBOW, PT3/8	1	1						
6	2	22190-160002	WASHER, SEAL 16	1	1						
7	2	23875-030000	PLUG, R03	1	1						
8	1	129198-01711	SPACER, OIL SUMP	1	1						
9	2	129198-01721	SPACER, OIL SUMP	1	1						
11	2	129198-01791	ELBOW, PT3/8	1	1						
12	2	129198-34200	VALVE ASSY	1	1						
13	3	129198-34250	COVER	1	1						
14	3	129198-34300	STAY	1	1						
15	3	22131-050000	WASHER 5	2	2						
16	3	22212-050000	WASHER 5	2	2						
17	3	26116-050122	BOLT, M5X 12 PLATED	2	2						
18	3	26712-050002	NUT, M5	2	2						
19	2	129198-34500	VALVE ASSY, REVERSE	1	1						
20	2	22137-060000	WASHER, 6	2	2						
21	2	22217-060000	WASHER, SPRING 6	2	2						
22	2	26106-060122	BOLT, M6X 12 PLATED	4	4						
23	2	26106-060122	BOLT, M6X 12 PLATED	2	2						
24	1	129470-01710	BRACKET	2	2						
25	1	26106-080752	BOLT, M8X 75 PLATED	10	10						
26	1	26106-080752	BOLT, M8X 75 PLATED	6	6						
27	1	26106-080752	BOLT, M8X 75 PLATED	4	4						
28	1	26106-080952	BOLT, M8X 95 PLATED	4	4						
29	1	26106-100252	BOLT, M10X 25 PLATED	4	4						
30	1	129150-35042	GASKET	1	1						
31	1	129198-35100	PIPE ASSY, OIL INLET	1	1						
35	1	26106-080852	BOLT, M8X 85 PLATED	2	2						

N:Old $\xleftrightarrow[\text{No}]{\text{Yes}}$ New, Q:Old $\xleftrightarrow[\text{Yes}]{\text{No}}$ New, R:Old $\xleftrightarrow[\text{Yes}]{\text{Yes}}$ New, S:Old $\xleftrightarrow[\text{No}]{\text{No}}$ New, W:Add, Z:Discontinued, F:Interchangeable by set, K:Q'ty Change

Copyright (C) 2014 YANMAR CO., LTD. All RightsReserved.

Fig.88. (76D)KEEL COOLER SPEC.

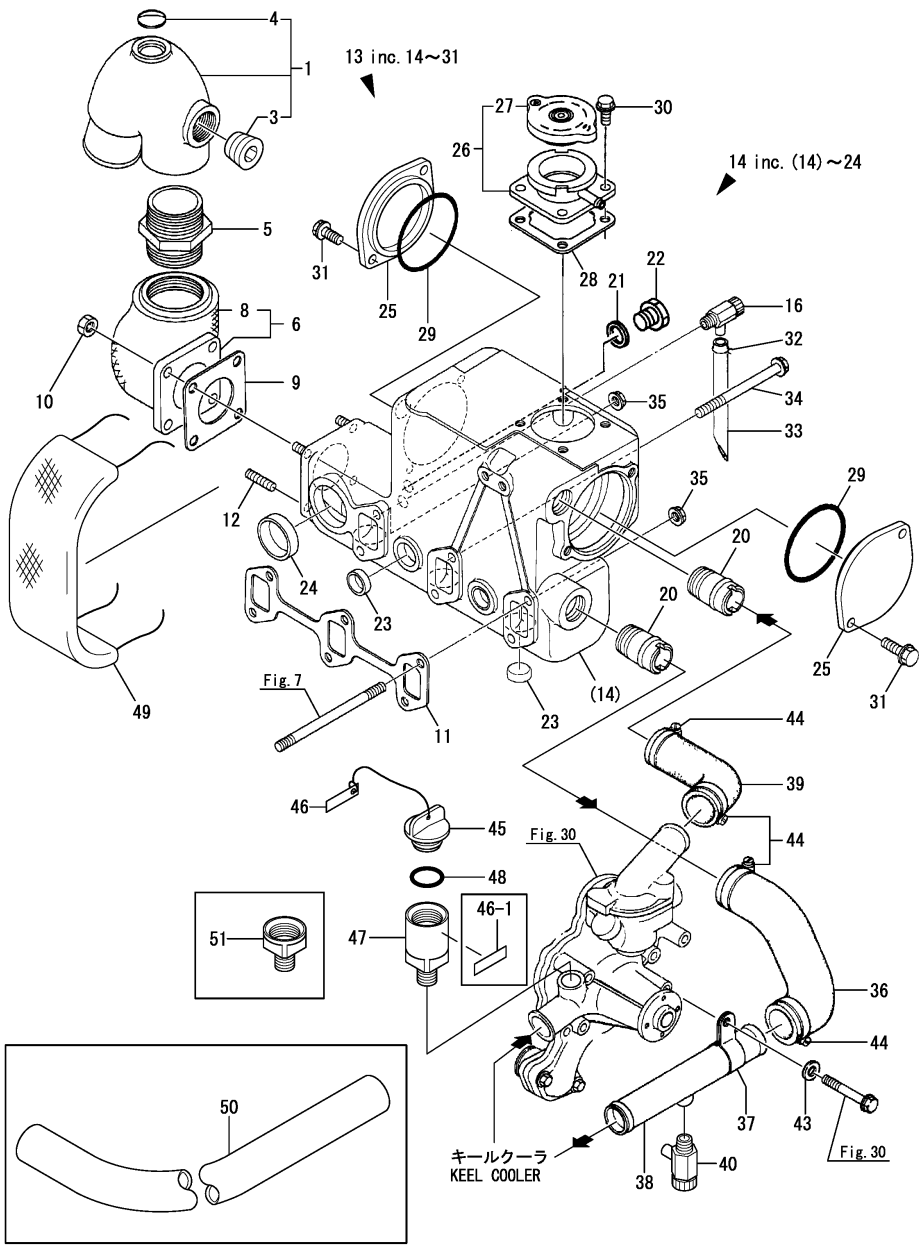

(A)=3JH25A (D)=
(B)=3JH30A (E)=
(C)= (F)=

No.	Lev.	Parts No.	Description	Q'ty (A)	(B)	(C)	(D)	(E)	(F)	I	R
1	1	129198-13510	ELBOW ASSY	1	1						
3	2	23871-060000	PLUG, R06	1	1						
4	2	27233-250000	PLUG, 25	1	1						
5	1	104214-13580	JOINT	1	1						
6	1	129198-13650	BEND ASSY, EXHAUST	1	1						
8	2	129198-13660	INSULATOR	1	1						
9	1	129472-18090	GASKET	1	1						
10	1	26703-080002	NUT, M8	4	4						
11	1	129150-13110	GASKET, EXH.MANIFOLD	1	1						
12	1	128170-13600	STUD, M8X31	4	4						
12-1	1	129690-13600	STUD, M8X34	4	4					R	
	(A=E03783)	(B=E03783)									
13	1	129198-44910	TANK ASSY	1	1					W	
	(A=E03638)	(B=E03638)									
14	2	129170-44000	COOLER ASSY, WATER	1	1						
16	3	119620-49290	COCK ASSY, 1/4	1	1						
20	3	124160-49480	JOINT, PIPE	2	2						
21	3	23414-170000	GASKET, 17X1.0	1	1						
22	3	23894-030002	PLUG, G3/8	1	1						
23	3	27241-280000	PLUG, 28	7	7						
24	3	27241-400000	PLUG, 40	1	1						
25	2	129198-44460	COVER, TANK	2	2						
26	2	129171-44600	FILLER ASSY	1	1						
27	3	129107-44590	CAP, RADIATOR	1	1						
28	2	120445-44640	GASKET	1	1						
29	2	24321-000750	O-RING, 1AG75.0	2	2						
30	2	26106-080162	BOLT, M8X 16 PLATED	4	4						
31	2	26106-080202	BOLT, M8X 20 PLATED	4	4						
32	1	124460-77680	RETAINER	1	1						
33	1	23061-070300	PIPE, 7X 300	1	1						
34	1	26106-081002	BOLT, M8X100 PLATED	4	4						
35	1	26306-080002	NUT, M8	2	2						
36	1	129470-49200	JOINT, RUBBER	1	1						
37	1	129470-49220	RETAINER	1	1						
38	1	129470-49250	PIPE, WATER	1	1						
39	1	129170-49260	JOINT	1	1						
40	1	129670-49290	COCK ASSY, R1/8	1	1						
43	1	22137-080000	WASHER, 8	1	1						
44	1	23000-041000	CLAMP, 41	4	4						
45	1	126630-01930	CAP, PF3/4	1	1						
45-1	1	129198-01880	CAP, G3/4	1	1					R	
	(A=E05908)	(B=E05908)									
46	1	129198-07570	LABEL, WATER	1	1						
46-1	1	129198-07571	LABEL, WATER	1	1					S	
	(A=E03685)	(B=E03685)									
47	1	129198-44420	FILLER, CW	1	1						
48	1	24311-000255	O-RING, 1AP25.5	1	1						
49	1	129198-13680	INSULATOR, EXH.BEND	1	1					W	
	(A=E08549)	(B=E08549)									
50	1	23072-101100	HOSE, 10X1100	2	2					W	1
	(A=*2010.07)	(B=*2010.07)									

Remarks
(1)Optional parts.

N:Old $\overset{\text{Yes}}{\underset{\text{No}}{\leftrightarrow}}$ New, Q:Old $\overset{\text{No}}{\underset{\text{Yes}}{\leftrightarrow}}$ New, R:Old $\overset{\text{Yes}}{\underset{\text{Yes}}{\leftrightarrow}}$ New, S:Old $\overset{\text{No}}{\underset{\text{No}}{\leftrightarrow}}$ New, W:Add, Z:Discontinued, F:Interchangeable by set, K:Q'ty Change

++ CONTINUE ++

Copyright (C) 2014 YANMAR CO., LTD. All RightsReserved.

Fig.88. (76D)KEEL COOLER SPEC.

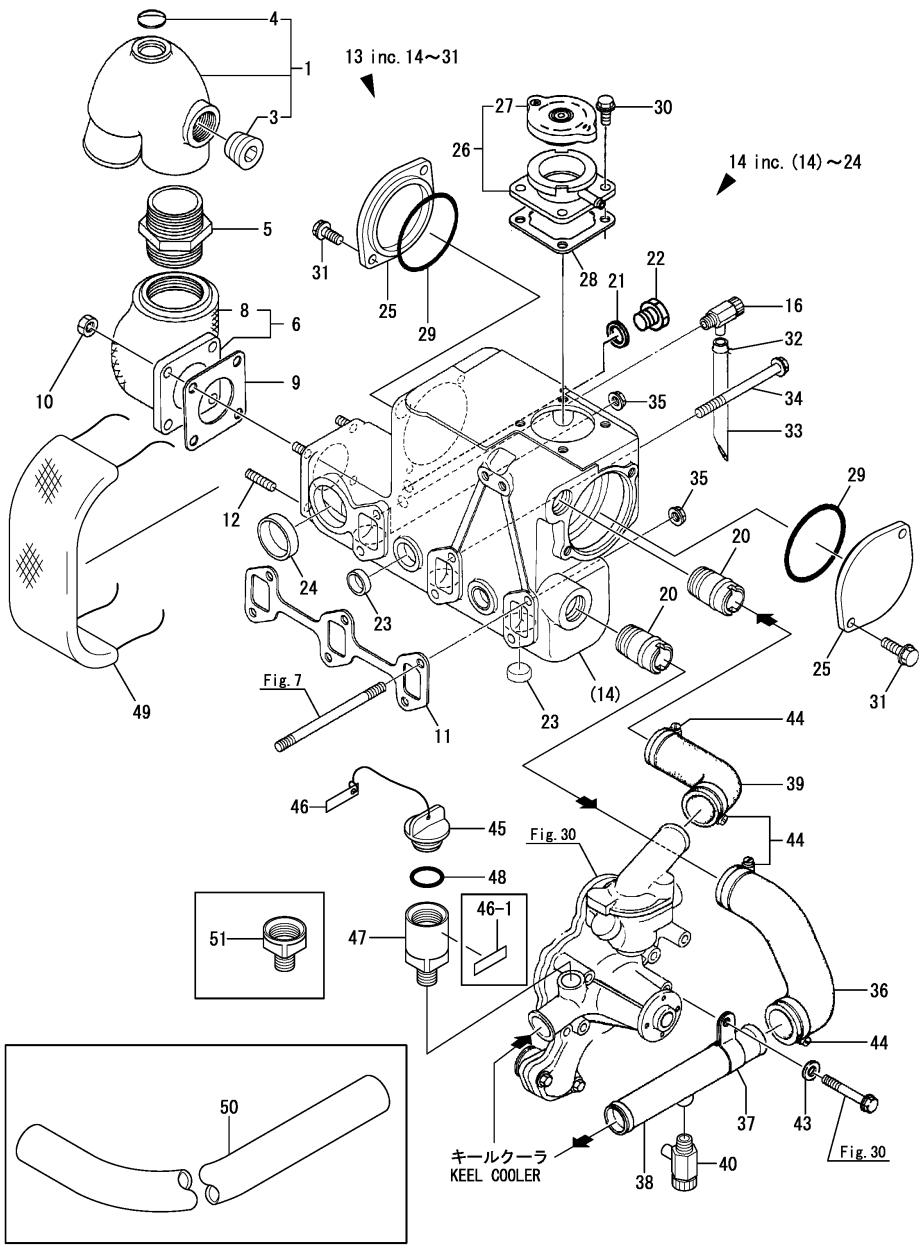

(A)=3JH25A
(B)=3JH30A
(C)=
(D)=
(E)=
(F)=

No.	Lev.	Parts No.	Description	Q'ty (A)	(B)	(C)	(D)	(E)	(F)	I	R
51	1 (A=E09214)	129198-44430 (B=E09214)	FILLER, CW	1	1					W	

Remarks
(1)Optional parts.

N:Old ←Yes/No→ New, Q:Old ←No/Yes→ New, R:Old ←Yes/Yes→ New, S:Old ←No/No→ New, W:Add, Z:Discontinued, F:Interchangeable by set, K:Q'ty Change

Copyright (C) 2014 YANMAR CO., LTD. All RightsReserved.

Fig.77. CLUTCH HOUSING

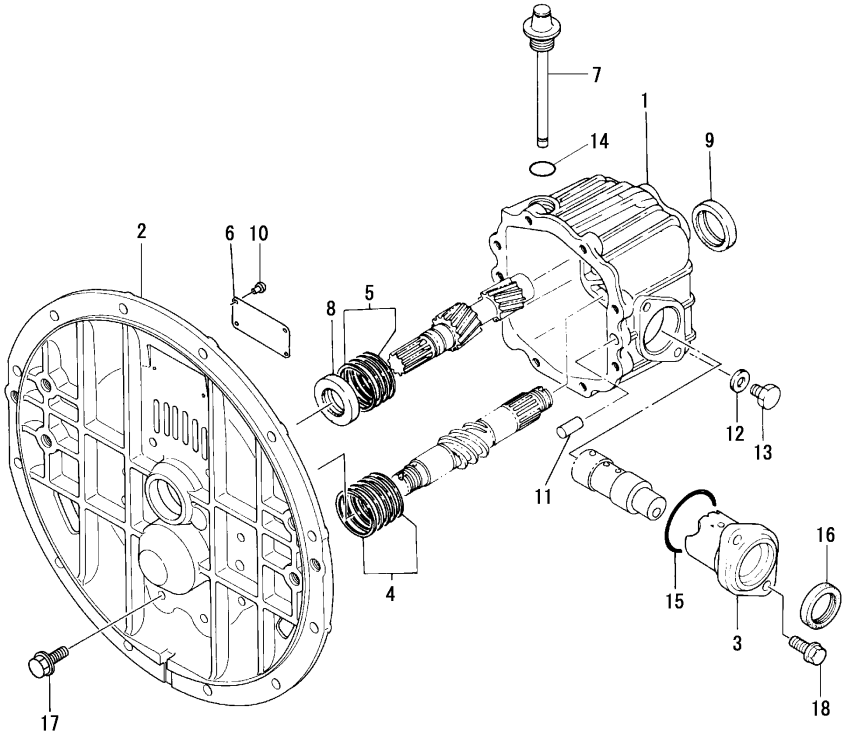

(A)=KM3P1 (D)=
(B)=KM3P3 (E)=
(C)= (F)=

No.	Lev.	Parts No.	Description	Q'ty (A)	(B)	(C)	(D)	(E)	(F)	I	R
1	1	177070-02012	HOUSING, CLUTCH	1	1						
1-1	1	177070-02020	CASE KM3P	1	1					R	
	(A=*2009.04)	(B=*2009.04)									
2	1	177070-02070	FLANGE, SAE#4	1	1						
3	1	177088-02120	COVER	1	1						
4	1	177088-02300	SHIM SET	1	1						
5	1	177088-02350	SHIM SET	1	1						
6	1	177088-02400	LABEL	1	1						
7	1	177088-02451	DIPSTICK	1	1						
8	1	177088-02950	SEAL SC25 40 8, OIL	1	1						
9	1	177088-02961	SEAL MHSA34 44 8,OIL	1	1						
10	1	102210-07990	RIVET	4	4						
11	1	22312-100160	PIN, PARALLEL M10X16	2	2						
12	1	23414-100000	GASKET, 10X1.0	1	1						
13	1	23887-100002	PLUG, 10	1	1						
14	1	24311-000180	O-RING, 1AP18.0	1	1						
15	1	24321-000400	O-RING, 1AG40.0	1	1						
16	1	24421-284008	SEAL, OIL TC284008	1	1						
17	1	26016-080252	BOLT, M8X 25	8	8						
18	1	26016-080302	BOLT, M8X 30	2	2						

N:Old $\xleftarrow[\text{No}]{\text{Yes}}$ New, Q:Old $\xleftarrow[\text{Yes}]{\text{No}}$ New, R:Old $\xleftarrow[\text{Yes}]{\text{Yes}}$ New, S:Old $\xleftarrow[\text{No}]{\text{No}}$ New, W:Add, Z:Discontinued, F:Interchangeable by set, K:Q'ty Change

Copyright (C) 2014 YANMAR CO., LTD. All RightsReserved.

Fig.78. INPUT SHAFT & IDLE GEAR SHAFT

(A)=KM3P1
(B)=KM3P3
(C)=
(D)=
(E)=
(F)=

No.	Lev.	Parts No.	Description	Q'ty (A)	(B)	(C)	(D)	(E)	(F)	I	R
1	1	177088-03400	ROLLER BERING	2	2						
2	1	177070-03031	SHAFT, INPUT I=2.36	1	1						
3	1	177070-03302	SHAFT, IDLE	1	1						
4	1	177088-03311	GEAR, IDLE Z=26	1	1						
5	1	177088-03331	NEEDLE BERG.#K162213	2	2						
6	1	177088-03341	WASHER, THRUST	1	1						
7	1	24341-000120	O-RING, 1AS12.0	1	1						

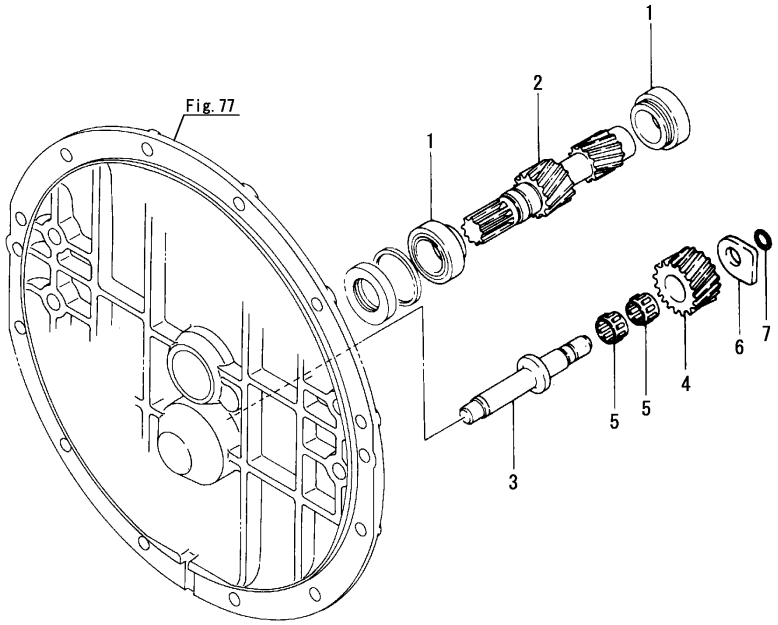

N:Old $\xleftarrow[\text{No}]{\text{Yes}}$ New, Q:Old $\xleftarrow[\text{Yes}]{\text{No}}$ New, R:Old $\xleftarrow[\text{Yes}]{\text{Yes}}$ New, S:Old $\xleftarrow[\text{No}]{\text{No}}$ New, W:Add, Z:Discontinued, F:Interchangeable by set, K:Q'ty Change

Copyright (C) 2014 YANMAR CO., LTD. All RightsReserved.

Fig.79. OUTPUT SHAFT

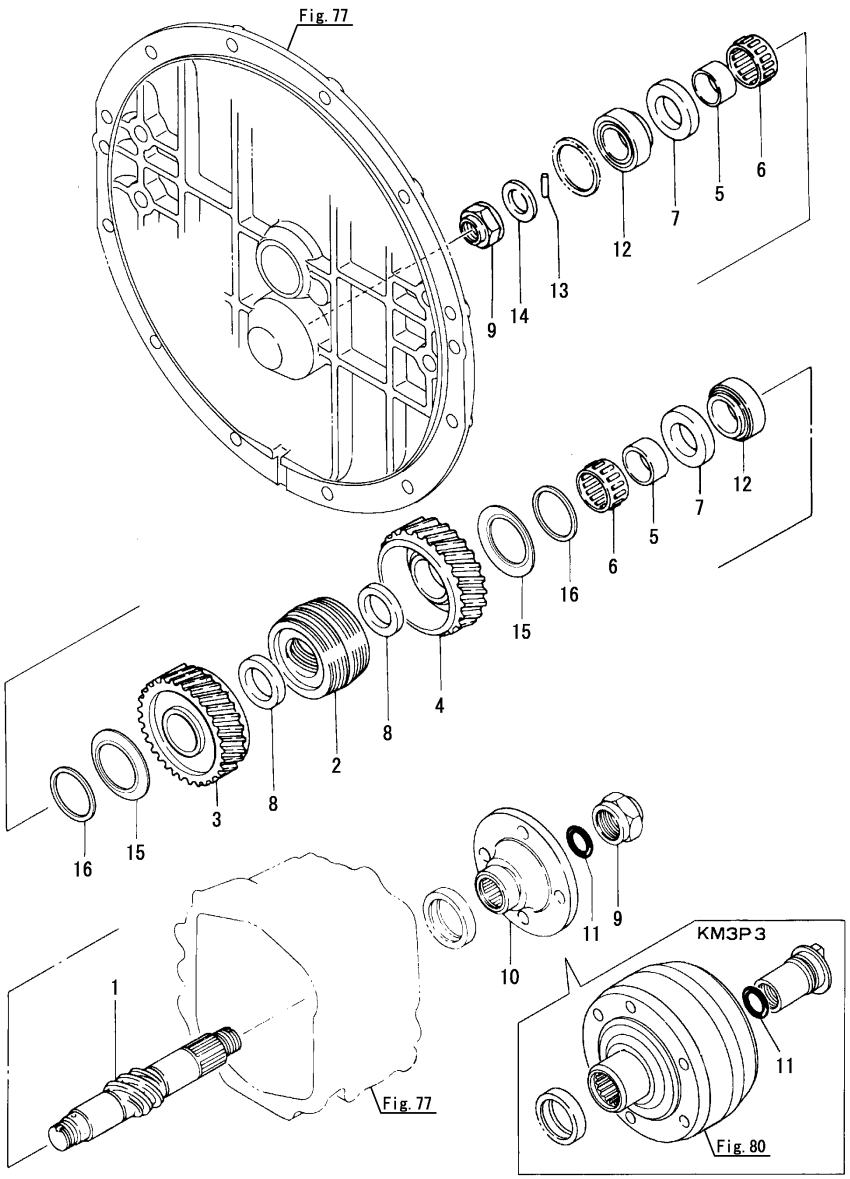

(A)=KM3P1 (D)=
(B)=KM3P3 (E)=
(C)= (F)=

No.	Lev.	Parts No.	Description	Q'ty (A)	(B)	(C)	(D)	(E)	(F)	I	R
1	1	177070-03041	SHAFT, OUTPUT	1	1						
2	1	177070-03071	CONE, DRIVE	1	1						
3	1	177070-03131	GEAR, FORWARD Z=59	1	1						
4	1	177070-03112	GEAR, Z=60	1	1						
5	1	177070-03190	RACE, BEARING	2	2						
6	1	177070-03200	NEEDLE BEARING	2	2						
7	1	177070-03231	COLLAR, THRUST	2	2						
8	1	177070-03250	COLLAR, THRUST	2	2						
9	1	177088-03272	NUT	2							
10	1	177070-03550	COUPLING	1							
11	1	24311-000210	O-RING, 1AP21.0	1	1						
12	1	24141-302050	BEARING, 30205	2	2						
13	1	177088-03290	PIN	1	1						
14	1	177088-03280	COLLAR, 32D-45T	1	1						
15	1	177088-03540	SPRING	2	2						
16	1	177073-03340	RETAINER, SPRING	2	2						

N:Old $\overset{\text{Yes}}{\underset{\text{No}}{\leftrightarrows}}$ New, Q:Old $\overset{\text{No}}{\underset{\text{Yes}}{\leftrightarrows}}$ New, R:Old $\overset{\text{Yes}}{\underset{\text{Yes}}{\leftrightarrows}}$ New, S:Old $\overset{\text{No}}{\underset{\text{No}}{\leftrightarrows}}$ New, W:Add, Z:Discontinued, F:Interchangeable by set, K:Q'ty Change

Copyright (C) 2014 YANMAR CO., LTD. All RightsReserved.

Fig.80. TORQUE LIMITER

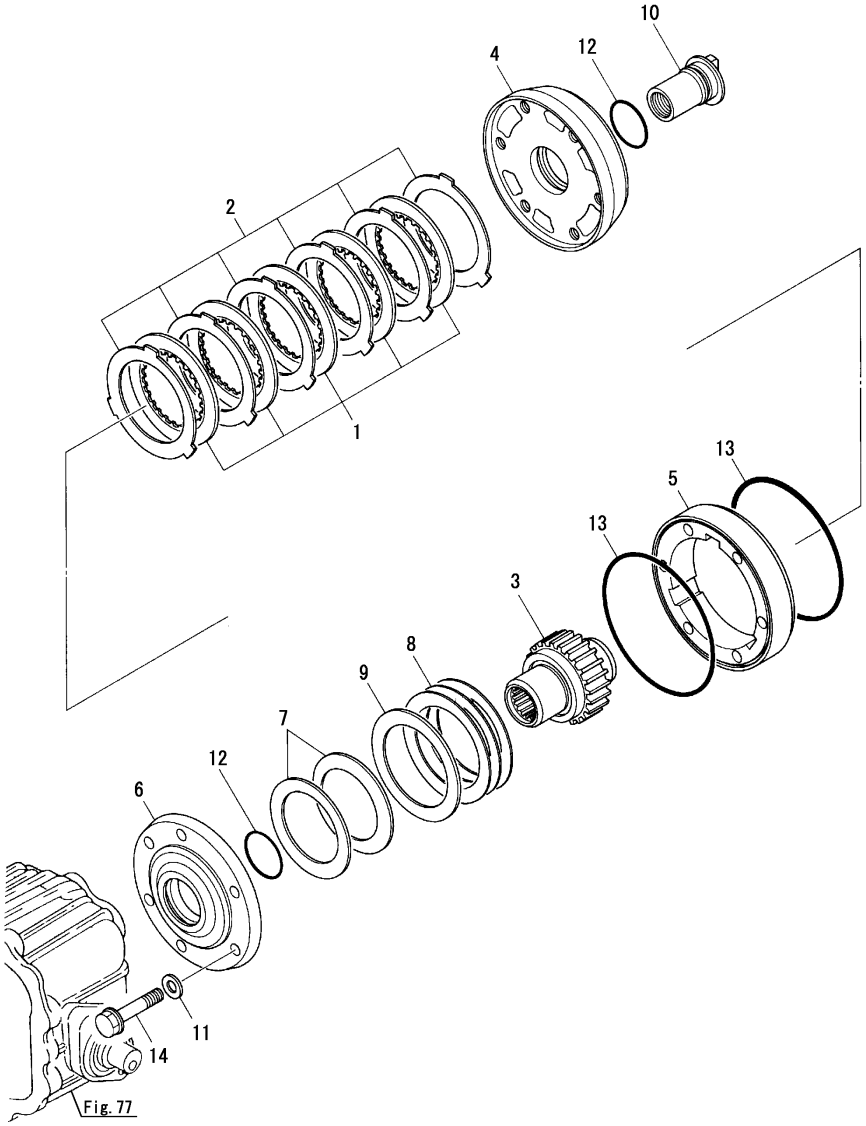

(A)=KM3P1 (D)=
(B)=KM3P3 (E)=
(C)= (F)=

No.	Lev.	Parts No.	Description	Q'ty (A)	(B)	(C)	(D)	(E)	(F)	I	R
1	1	177040-03080	DISK, FRICTION		5						
2	1	177090-03090	PLATE, STEEL		6						
3	1	177070-03651	HOLDER		1						
4	1	177070-03660	COUPLING		1						
5	1	177070-03670	HOUSING		1						
6	1	177070-03681	COVER, HOUSING		1						
7	1	177070-03691	SPRING		2						
8	1	177070-03700	SHIM SET		1						
9	1	177070-03741	SPACER		1						
10	1	177070-03750	NUT, LOCK		1						
11	1	22190-080000	WASHER, SEAL 8		6						
12	1	24311-000340	O-RING, 1AP34.0		2						
13	1	24341-001050	O-RING, 1AS105.0		2						
14	1	26106-080452	BOLT, M8X 45 PLATED		6						

N:Old $\frac{\text{Yes}}{\text{No}}$ New, Q:Old $\frac{\text{No}}{\text{Yes}}$ New, R:Old $\frac{\text{Yes}}{\text{Yes}}$ New, S:Old $\frac{\text{No}}{\text{No}}$ New, W:Add, Z:Discontinued, F:Interchangeable by set, K:Q'ty Change

Copyright (C) 2014 YANMAR CO., LTD. All RightsReserved.

Fig.81. REMOTE CONTROL DEVICE

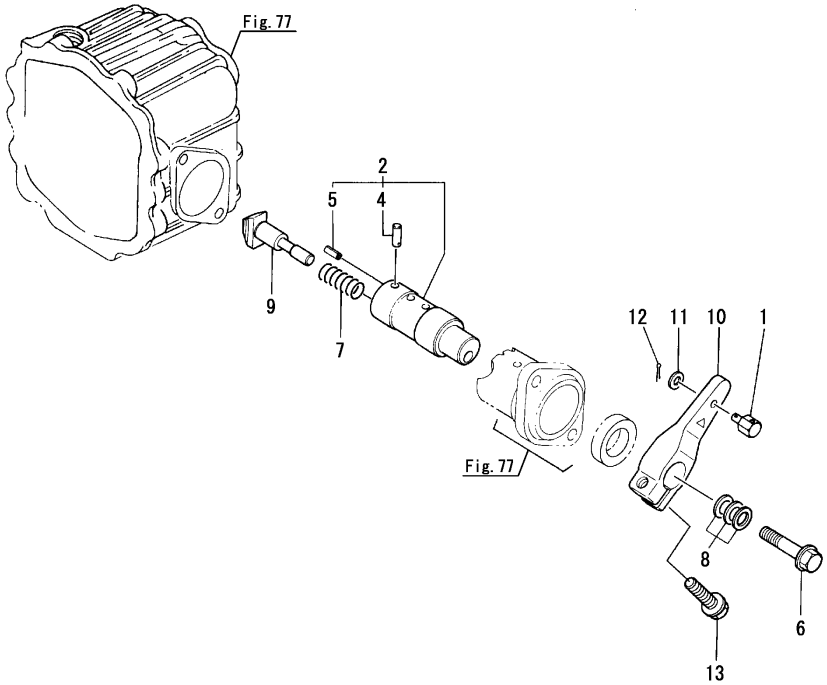

(A)=KM3P1 (D)=
(B)=KM3P3 (E)=
(C)= (F)=

No.	Lev.	Parts No.	Description	Q'ty (A)	(B)	(C)	(D)	(E)	(F)	I	R
1	1	177073-06200	PIVOT	1	1						
2	1	177088-06340	SHAFT ASSY	1	1						
4	2	196322-06610	PIN, PARALLEL 5X18	1	1						
5	2	22351-020012	PIN, SPRING 2.0X12	1	1						
6	1	177088-06360	BOLT	1	1						
7	1	177088-06370	SPRING	1	1						
8	1	177088-06380	SHIM SET	1	1						
9	1	177088-06390	SHIFTER	1	1						
10	1	177088-06400	LEVER	1	1						
11	1	22137-060000	WASHER, 6	1	1						
12	1	22417-160120	PIN, COTTER 1.6X12	1	1						
13	1	26106-080252	BOLT, M8X 25 PLATED	1	1						

N:Old $\xleftrightarrow[\text{No}]{\text{Yes}}$ New, Q:Old $\xleftrightarrow[\text{Yes}]{\text{No}}$ New, R:Old $\xleftrightarrow[\text{Yes}]{\text{Yes}}$ New, S:Old $\xleftrightarrow[\text{No}]{\text{No}}$ New, W:Add, Z:Discontinued, F:Interchangeable by set, K:Q'ty Change

Copyright (C) 2014 YANMAR CO., LTD. All RightsReserved.

Fig.82. REMOTE CONTROL PASSIVE UNIT

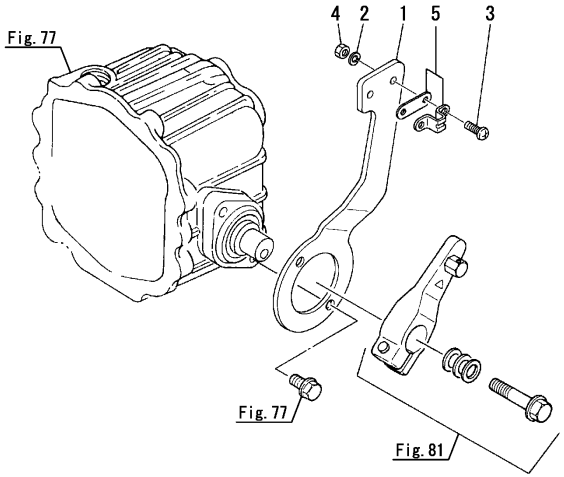

(A)=KM3P1
(B)=KM3P3
(C)=
(D)=
(E)=
(F)=

No.	Lev.	Parts No.	Description	Q'ty (A)	(B)	(C)	(D)	(E)	(F)	I	R
1	1	177070-06600	STAY	1	1						
2	1	22217-050000	WASHER, SPRING 5	2	2						
3	1	26557-050162	SCREW, M5X16	2	2						
4	1	26716-050002	NUT, M5	2	2						
5	1	41710-000410	CLAMP	1	1						

N:Old $\xleftrightarrow[\text{No}]{\text{Yes}}$ New, Q:Old $\xleftrightarrow[\text{Yes}]{\text{No}}$ New, R:Old $\xleftrightarrow[\text{Yes}]{\text{Yes}}$ New, S:Old $\xleftrightarrow[\text{No}]{\text{No}}$ New, W:Add, Z:Discontinued, F:Interchangeable by set, K:Q'ty Change

Copyright (C) 2014 YANMAR CO., LTD. All RightsReserved.

Parts No. Index

Parts No.	Fig. No.	Ref. No.
101304-59020	42	1 -1
	43	1
102210-07990	77	10
103338-11190	11	18
	75	9
104200-59170	42	5
104200-76401	69	25
104200-92350	54	7
		9
104200-92600	54	2
		10
104214-13580	14	4
	88	5
104214-39720	23	2
104264-59020	42	1
104264-59030	42	2
		2 -1
	43	17
104271-91351	53	2
104271-91352	83	12
	84	11
	85	14
104273-76190	69	16
104273-76290	69	22
104511-11370	11	21
		46
105425-01690	87	2
105583-85900	52	1
		4
106500-44810	3	10
		10 -1
114250-53080	39	5
114250-53120	39	9
114250-53130	39	10
114250-53140	39	11
114250-53210	39	12
114250-53400	39	13
119000-59550	43	7 -1
119171-77330	90	27
119174-25060	20	5 -1
119309-01810	1	7 -1
119593-59580	43	9 -1
119593-59590	43	16 -1
119609-32040	26	2 A
119620-49290	31	4 -1
	88	16
119620-77461	90	14
119620-77471	90	15
119620-77490	90	16
119620-79200	90	8

Parts No.	Fig. No.	Ref. No.
119620-79210	90	9
119620-79220	90	10
119620-79230	90	11
119620-79250	90	6
119620-79290	90	20
119620-79300	90	21
119620-79310	90	22
119620-79320	90	23
119620-79330	90	24
119620-79340	90	25
119620-79350	90	2
119625-11870	11	37
	98	2
	99	2
119625-11880	11	38
119625-11900	11	39
119626-77210	90	1
119626-77450	90	13
119660-61491	93	33 -2
119660-61590	93	33 -3
119660-61901	93	74
119717-51420	37	62 -1
119717-51500	37	39 -1
119717-51860	37	67 -1
119773-91501	49	13
119802-01561	2	7 -1
		23 -1
	91	4
		5
119802-11280	11	36 -1
119803-53400	39	13 -1
119810-32000	22	1
119810-51040	37	4
119813-59950	43	11 -1
119865-35320	26	2 E
		8
119865-35330	26	2 F
		9
119865-35350	26	2 H
		11
120130-11860	11	44
120130-49350	31	4
120130-91370	49	7 -1
120322-33050	31	18 A
120323-61470	93	26 -1
120324-07190	100	1
120324-07200	100	2
120324-07210	100	3
120324-55750	66	23
120324-55751	66	23 -1

Parts No.	Fig. No.	Ref. No.
120324-55760	66	27
120324-91610	84	25
	85	30
120324-91690	84	15
	85	7
120324-91900	85	49
120324-91950	85	50
120445-44540	32	2
120445-44600	31	11
120445-44620	9	5
	31	14
120445-44640	31	15
	88	28
121023-01550	2	5
121023-01551	2	5 -1
	91	22
121100-22400	18	8
121111-21501	17	1
	63	1
121250-59550	43	7
121252-39450	49	1 -2
	98	11
	99	11
121400-11340	11	19
121420-01760	12	11
121450-01560	2	7
121550-23200	19	4
121575-91250	53	4
	83	10
	84	10
	85	13
121575-91260	53	8
121750-03080	12	6
121750-59890	42	8
121750-59910	66	2
121850-11860	11	9
121850-21680	16	8
121850-51960	2	25
	91	14
121851-11970	26	1
122117-51560	37	44
122710-51050	37	5
122710-51090	37	8
123310-77640	50	1
123325-35110	66	17
123325-35140	66	15
123340-76790	70	1
123482-39670	49	12
123482-91291	53	5
	83	11

Parts No.	Fig. No.	Ref. No.
123482-91291	84	17
	85	18
123501-79240	90	5
123672-55811	66	1
123672-92950	61	4
123678-55860	66	19
123682-07850	9	4
123682-07851	9	4 -1
123682-07852	9	4 -2
123682-44210	31	12
123682-44220	31	13
123900-77700	94	2
123900-77730	94	5
124060-21660	73	2
124060-39451	49	1
124060-39452	49	1 -1
124066-59100	43	16
124070-77950	49	5
124160-01751	2	8
	12	10
	91	9
124160-01910	1	4
124160-11360	12	12
	62	3
	92	1
124160-39140	28	1
124160-49480	14	7
	31	5
	88	20
124195-77770	89	23
124220-92700	61	2
124220-92920	61	3
124223-59750	42	7
	43	10
	67	3
124240-01870	2	26
124240-01871	2	10 -1
		26 -1
	91	11
		25
124413-39100	27	1
124460-11340	11	20
124460-77680	1	19
	31	22
	34	6 -1
	88	32
124550-01590	2	18 -1
	91	6
124550-21600	17	4
	63	4

Parts No. Index

Parts No.	Fig. No.	Ref. No.
124550-51350	37	30
124550-51370	37	31
124550-59820	28	7
		7 A
124550-59830	28	7 -1
124550-66370	44	47
	93	58
124550-77030	47	2
124617-91920	53	11
		19
124617-91980	83	4
	84	4
	85	4
124617-91990	83	34
	84	34
	85	39
124722-59050	34	6
124736-07900	8	2
124770-52180	69	6
124770-76100	69	12
124770-77940	49	4
124790-89200	73	1
124790-89210	73	4
124790-89230	73	10
124790-89250	73	11
124790-89800	73	13
124950-51190	37	12
126630-01930	88	45
127610-91350	49	7
	98	22
	99	19
127687-91870	83	7
	84	7
	85	41
127687-91880	83	36
	84	36
	85	40
127692-91410	83	30
	84	30
	85	35
127692-91440	83	31
	84	31
	85	36
127692-91450	83	32
	84	32
	85	37
128170-13600	31	19
	88	12
128170-51300	37	25
128170-91020	53	9

Parts No.	Fig. No.	Ref. No.
128170-91160	49	6
128170-91310	53	3
128170-91810	53	12
128170-91820	53	13
128170-91830	53	14
128270-77200	48	1
	56	1
128271-77200	94	1
		1 -1
128271-77730	94	4
128271-77740	94	6
128271-77750	94	7
128275-39700	27	3
128296-07190	100	6
128296-07250	86	2
128296-07260	9	6
	86	2 -1
128296-07300	9	7
	86	3 -1
128296-07360	9	8
	86	1 -1
128296-07400	100	4
		7
128296-07420	100	5
		8
128296-07450	100	9
128296-07460	100	10
128371-01800	1	16
128391-91440	83	23
	84	23
128391-91640	83	22
	84	22
128391-91700	83	35
	84	35
128391-91740	83	24
	84	24
128391-91930	83	18
	84	18
128401-77440	90	12
128695-44090	34	1
	35	1
129001-01250	1	8 -1
129052-42050	30	2 A
129052-42310	30	2 B
129052-77380	90	4
129052-77422	90	7
129052-79260	90	18
129052-79270	90	19
129054-42320	30	2 -1
129100-01520	2	3 -1

Parts No.	Fig. No.	Ref. No.
129100-01520	91	3
129100-01580	16	5 A
	17	5 -1
		5 -2
129100-01620	3	2
	76	7
129100-01621	76	7 -2
129100-11100	11	14
	75	5
129100-11110	11	15
	75	6
129100-11111	11	15 -1
	75	6 -1
129100-11112	11	15 -2
	75	6 -2
129100-23910	19	9
129100-25900	21	1
129100-51560	37	45 -1
129100-51570	37	44 -1
129100-53000	39	2
	75	2
	98	18
	99	15
129100-59810	41	5
129100-59811	41	5 -1
129100-59820	41	6
129100-59821	41	6 -1
129100-59830	41	7
129100-59831	41	7 -1
129100-59951	43	11
129100-61540	93	48 A
129100-61821	44	43 -1
	93	54
129100-61930	44	45
	93	56
129100-77500	13	4
129100-77501	13	4 -1
129100-77510	13	9
129107-44590	31	12 -1
	88	27
129129-14580	15	6
129150-01200	1	17
129150-01510	2	2
	76	3
129150-01511	76	3 -2
129150-01520	2	3
129150-01530	2	4
	76	4
129150-01531	76	4 -3
129150-01870	2	10

Parts No.	Fig. No.	Ref. No.
129150-01880	2	11
	29	17
	76	6
129150-01881	2	11 -1
	29	17 -1
	76	6 -1
129150-02020	1	10 A
	5	1
129150-02450	6	2
	15	7
129150-02800	1	13
	5	4
129150-02930	1	13 C
	5	7
129150-02931	1	13 C-1
	5	7 -1
129150-02940	1	24
	5	13
129150-02941	1	24 -1
	5	13 -1
129150-03070	7	2
	12	5
	92	4
129150-03080	12	6 -1
	92	5
129150-11230	11	27
129150-11280	11	32
129150-11290	11	33
129150-11300	62	1
129150-11301	92	9
129150-11310	12	3
	62	2
	76	9
	92	11
129150-11370	11	46 -1
129150-11750	11	29
129150-11810	11	45
129150-12110	13	2
	76	10
129150-12111	13	2 -1
	76	10 -1
	98	3
	99	3
129150-13110	31	21
	76	16
	88	11
	98	4
	99	4
129150-14011	15	1
129150-14101	15	2

Parts No. Index

Parts No.	Fig. No.	Ref. No.
129150-14101	15	10
129150-14200	15	3
129150-14400	15	4
129150-21200	16	3
129150-22300	18	7
129150-23600	19	5
129150-23601	19	5 -1
129150-23610	19	7
129150-23611	19	7 -1
129150-25020	20	6
129150-25051	20	1
129150-25052	20	1 -1
129150-25101	20	2
129150-32020	22	2
	76	12
129150-35040	25	1
	76	13
129150-35041	25	1 -1
	76	13 -1
129150-35042	25	1 -2
	76	13 -2
	87	30
129150-35101	26	2
		2 B
129150-35110	26	3
	76	14
129150-35111	26	3 -1
	76	14 -1
129150-35150	26	5
129150-35151	26	5 -1
129150-35152	26	5 -2
129150-35153	26	5 -3
	98	10
	99	10
129150-35170	26	5 -4
	98	10 -1
	99	10 -1
129150-35340	26	2 G
		10
129150-35350	26	2 I
		12
129150-39150	28	3
129150-39180	28	4
129150-39450	28	2
129150-42020	30	3
	76	15
129150-42059	30	2 A-1
	76	15 -1
129150-42129	30	2 E
129150-42300	30	2 D

Parts No.	Fig. No.	Ref. No.
129150-42301	30	2 D-1
129150-42319	30	2 B-1
129150-42320	30	2
129150-49810	36	4
	76	18
129150-49811	36	4 -1
	76	18 -1
	98	17
	99	14
129150-59120	41	1
129150-59130	41	4
129150-59580	43	9
129150-77510	13	5
		5 -1
129150-77511	13	5 -2
129155-11241	11	25
129155-11260	11	30
129155-11270	11	31
129155-51020	37	64 -1
129155-51180	37	11
129155-51200	37	13
129155-51270	37	23
129155-51280	37	24
	44	1
	93	2
		2 -1
129155-51320	37	28
129155-51340	37	29
129155-51370	37	32
129155-51380	37	33
129155-51390	37	34
129155-51400	37	35
129155-51410	37	36
129155-51420	37	37
129155-51450	37	38
129155-51500	37	39
129155-51530	37	41
129155-51540	37	42
129155-51550	37	43
129155-51570	37	46
129155-51580	37	47
129155-51591	37	48
129155-51600	37	49
129155-51630	37	19 A
129155-51700	37	50
129155-51701	37	50 -1
129155-51710	37	51
129155-51711	37	51 -1
129155-51750	37	52
129155-51751	37	52 -1

Parts No.	Fig. No.	Ref. No.
129155-51760	37	53
129155-51761	37	53 -1
129155-51790	37	54
129155-52050	38	2
	76	19
129155-52051	38	2 -1
	76	19 -1
129155-61010	44	4
129155-61011	44	4 -1
129155-61012	93	3
129155-61013	93	3 -1
129155-61050	44	5
	93	5
129155-61051	93	5 -1
129155-61060	44	6
	93	6
129155-61070	44	7
	93	7
129155-61071	93	7 -1
129155-61090	44	8
129155-61120	44	9
	93	8
129155-61130	44	10
	93	9
129155-61140	44	11
	93	10
129155-61201	44	16
129155-61341	44	20
	93	15
129155-61350	93	15 -1
129155-61380	93	33 -1
129155-61400	44	21
	93	16
129155-61430	44	24
	93	19
129155-61450	44	26 -1
	93	24
129155-61460	44	27
	93	25
129155-61470	44	28
	93	26
129155-61480	44	29
	93	27
129155-61490	44	30
	93	33
129155-61500	44	31
	93	34
129155-61540	44	36
	93	49
129155-61810	44	42

Parts No.	Fig. No.	Ref. No.
129155-61810	93	53
129155-61820	44	43
129155-61830	44	44
	93	55
129155-61950	44	46
	93	57
129156-01332	1	18
	76	2
129156-44760	30	5
129156-51910	37	55
129170-01700	4	1
129170-01701	4	1 -1
	87	3
129170-01750	4	4
	76	8
129170-12100	13	1
129170-21001	16	1
129170-21590	17	2
129170-21650	16	6
129170-44000	31	2
	88	14
129170-44110	31	8
129170-44900	31	1 -1
129170-49010	34	2
129170-49260	35	5
	88	39
129170-67100	46	1
129170-91610	83	25
129170-91650	83	8
	84	8
	85	11
129170-91800	83	13
	84	12
	85	15
129170-91810	83	17
	84	16
	85	10
129170-91930	85	20
129171-01330	1	18 -1
	76	2 -1
	98	1
	99	1
129171-44600	31	11 -1
	88	26
129190-61500	93	34 -1
129191-01500	91	1
129198-01510	2	1 -2
129198-01650	57	1
129198-01700	87	1
129198-01711	87	8

Parts No. Index

Parts No.	Fig. No.	Ref. No.
129198-01721	87	9
129198-01730	4	3
129198-01750	4	4 -1
	76	8 -1
129198-01790	4	5
		6
129198-01791	4	5 -1
		6 -1
	87	5
		11
129198-01880	88	45 -1
129198-01900	3	4
129198-01901	3	4 -1
129198-03010	7	1
	12	4
	92	3
129198-03120	7	7
129198-03130	7	8
129198-03140	7	9
129198-03150	7	10
129198-03730	58	1
	92	6
129198-03740	58	2
	92	7
129198-03760	58	3
	92	8
129198-07200	9	1
129198-07350	9	2
129198-07360	9	3
129198-07410	101	1
129198-07411	101	1 -1
129198-07420	101	2
129198-07421	101	2 -1
129198-07450	59	2
129198-07460	59	1
129198-07470	59	1 -1
129198-07471	59	1 -2
129198-07480	59	2 -1
129198-07481	59	2 -2
129198-07570	88	46
129198-07571	88	46 -1
129198-08110	60	2
129198-08130	61	1
129198-08150	10	2
129198-08160	10	3
129198-11350	12	1 -1
129198-11360	92	2
129198-11700	11	1 -2
129198-12550	13	3
129198-13500	14	1

Parts No.	Fig. No.	Ref. No.
129198-13510	88	1
129198-13600	14	5
129198-13650	14	5 -1
	88	6
129198-13660	14	5 A
	88	8
129198-13680	14	9
	88	49
129198-21590	63	2
129198-23100	19	1 -1
129198-25900	64	1
129198-34200	24	1
	87	12
129198-34250	24	2
	87	13
129198-34300	24	3
	87	14
129198-34500	87	19
129198-34800	23	5 -1
129198-34860	23	1
129198-35090	25	2
129198-35100	87	31
129198-35120	26	4
129198-35200	26	2 -1
129198-35290	26	2 C
		6
129198-39610	28	6 -1
129198-42500	29	1
129198-42501	29	1 -1
129198-42502	29	1 -2
129198-42520	29	5
	98	12
129198-42540	29	3
	98	14
129198-44420	88	47
129198-44430	88	51
129198-44460	88	25
129198-44910	88	13
129198-49040	34	4
129198-59530	43	4
129198-59540	42	6
	43	5
129198-59810	75	10
129198-61700	44	38
	93	51
129198-76010	69	7
129198-76011	69	7 -1
129198-76020	69	11
129198-76100	69	13
129198-76110	69	14

Parts No.	Fig. No.	Ref. No.
129198-76120	69	49
129198-76130	69	9
129198-76160	69	3
129198-76180	69	15
129198-76200	69	17
129198-76210	69	10
129198-76211	69	10 -1
129198-76220	69	18
129198-76400	69	25 -1
129198-77270	90	26
129198-77700	83	38
	84	44
	85	48
129198-77930	49	3
129198-77931	49	3 -1
129198-77932	49	3 -2
129198-77933	49	3 -3
129198-77934	49	3 -4
129198-85010	51	1
129198-85050	51	2
129198-85520	52	1 -1
		4 -1
129198-89260	73	12
129198-91130	84	1
129198-91160	85	1
129198-91161	85	1 -1
129198-91162	85	1 -2
129198-91230	84	8 A
	85	11 A
129198-91260	84	5
129198-91280	85	8
129198-91810	84	38
	85	43
129198-91820	84	39
	85	44
129198-91830	85	38
129198-91850	84	33
129198-91860	84	6
	85	9
129198-91880	84	40
	85	45
129198-91890	84	41
	85	46
129263-42120	30	2 E-1
129270-59550	43	7 -3
129270-59580	43	9 -2
129270-81190	51	1 -1
		2 -1
129400-01600	3	1
129400-01601	3	1 -1

Parts No.	Fig. No.	Ref. No.
129400-51200	37	20
129400-92420	74	1
129402-22090	18	1
129402-22920	18	15
129402-22970	18	17
129423-77710	90	17
129470-01500	2	1
129470-01501	2	1 -1
129470-01510	76	3 -1
129470-01530	76	4 -1
129470-01531	76	4 -2
129470-01620	76	7 -1
129470-01710	4	2
	87	24
129470-07230	8	1
129470-11080	11	5
		5 -2
129470-11090	11	6
129470-11850	11	5 -1
129470-11920	11	43
	39	14
129470-39600	49	2
129470-42000	30	1
129470-42001	30	1 -1
129470-42002	30	1 -2
129470-42003	30	1 -3
129470-42530	29	4
129470-42531	29	4 -1
129470-42532	29	4 -2
	98	13
129470-42550	29	6
129470-42700	29	14
129470-42800	29	18
129470-44440	31	9
129470-44450	31	10
129470-49040	34	5
129470-49200	35	7
	88	36
129470-49220	35	2
	88	37
129470-49240	35	3
129470-49250	35	4
	88	38
129470-49540	36	1
129470-49801	36	3
	98	16
	99	13
129470-51060	37	6
129470-51080	37	7
129470-55610	40	2

Parts No. Index

Parts No.	Fig. No.	Ref. No.
129470-55700	40	3
129470-55701	40	3 -1
129470-55702	40	3 -2
129470-55703	40	3 -3
	98	21
	99	18
129470-55810	40	3 -4
	98	21 -1
	99	18 -1
129470-59120	42	3
		4
129470-59122	42	4 -1
129470-59540	43	6
129470-59542	43	6 -1
129470-59560	43	8
129470-59562	43	8 -2
129470-61440	44	25
129470-61450	44	26
129470-61650	44	37
	93	50
129470-67200	46	2
129470-67550	68	1
129470-77340	48	4
129470-86500	72	1
129470-91190	83	16
129470-92300	74	2
129470-92310	74	3
129470-92320	74	4
129472-18090	14	6 -1
	76	11 -1
	88	9
	98	5
	99	5
129473-61800	44	39
129473-61801	44	39 -1
	93	52
129474-49300	28	6
129475-49020	34	3
129486-42050	30	3 -1
129490-07250	86	1
129490-08100	10	1
	60	1
129490-77340	48	4 -1
129491-52000	37	74
	38	1
129491-52100	38	3
129491-52101	38	3 -1
129495-03090	7	7 -1
129495-59300	43	3
129495-59551	43	7 -2

Parts No.	Fig. No.	Ref. No.
129495-59561	43	8 -1
129495-67550	68	2
129495-77330	48	3
129495-91010	53	16
129495-91100	53	1
129495-91120	53	10
129495-91130	83	1
129495-91150	53	15
129495-91260	83	5
129495-91860	83	6
129499-61440	44	25 -1
	93	23
129550-42350	30	4
129570-59121	42	3 -1
129570-91850	83	33
129573-25090	20	7
129573-25100	20	2 -1
129574-77710	83	37
	84	43
	85	59
129574-77720	84	55
	85	60
129574-91200	83	2
	84	2
	85	2
129574-91210	85	5
129574-91220	85	6
129574-91221	85	6 -1
129574-91222	85	6 -2
129574-91410	83	9
	84	9
	85	12
129574-91420	83	20
	84	20
	85	22
129574-91430	85	25
129574-91440	85	28
129574-91530	83	46
	84	52
	85	56
129574-91540	83	47
	84	53
	85	57
129574-91550	83	48
	84	54
	85	58
129574-91620	83	19
	84	19
	85	21
129574-91630	85	24

Parts No.	Fig. No.	Ref. No.
129574-91640	85	27
129574-91650	83	29
	84	29
	85	34
129574-91710	83	26
	84	26
	85	31
129574-91720	83	21
	84	21
	85	23
129574-91730	85	26
129574-91740	85	29
129574-91750	83	27
	84	27
	85	32
129574-91760	84	42
	85	47
129574-91770	83	28
	84	28
	85	33
129574-91780	83	14
	84	13
	85	16
129574-91790	83	15
	84	14
	85	17
129574-91870	83	3
	84	3
	85	3
129574-91890	85	19
129574-91900	83	39
	84	45
129574-91950	83	40
	84	46
129574-91960	83	41
	84	47
	85	51
129574-91970	83	42
	84	48
	85	52
129590-67310	45	1 -1
129595-61200	93	11
129595-61201	93	11 -1
129608-77010	47	1 -1
	89	1
129608-77110	89	4
129670-39600	49	2 -2
129670-49290	34	1 -1
	35	1 -1
	88	40

Parts No.	Fig. No.	Ref. No.
129670-77340	94	8
129673-01600	3	1 -2
129673-01620	3	1 -3
129685-11930	39	14 -1
129690-02800	1	13 -1
	5	4 -1
129690-02870	1	21
	5	10
129690-13600	31	19 -1
	88	12 -1
129693-44300	11	47 -1
129693-77210	48	2 -1
129693-77350	48	10
129695-77340	48	4 -2
129695-77350	48	11
129695-77360	48	12
129695-77371	94	9
129695-77380	94	10
129698-77020	89	2
129698-77101	89	3
129698-77120	89	5
129698-77130	89	7
129698-77140	89	6
129698-77150	89	8
129698-77161	89	9
129698-77170	89	10
129698-77180	89	17
129698-77190	89	18
129698-77200	89	19
129698-77210	89	20
129698-77220	89	21
129698-77230	89	22
129698-77240	89	15
129698-77250	89	16
129698-77260	89	11
129698-77270	89	13
129698-77280	89	14
129750-03080	7	3
129772-77500	53	20
129792-18090	14	6
	76	11
129795-01780	3	3
129795-01800	2	9
	91	10
129795-01950	1	11
	2	12
	91	13
129795-02411	1	10 D
	6	1
129795-02412	1	10 D-1

Parts No. Index

Parts No.	Fig. No.	Ref. No.
129795-02412	6	1 -1
129795-11120	11	16
	75	7
129795-11180	11	17
	75	8
129795-21661	16	7
129795-42670	29	7
129795-49550	36	2
	76	17
129795-49551	36	2 -1
	76	17 -1
	98	15
	99	12
129795-59100	67	1
129795-67310	45	1
129795-77210	48	2
129795-91190	53	18
129795-91800	53	17
	84	37
	85	42
129900-07900	8	2 -1
		2 -2
129900-77810	94	3
129916-49740	30	2 C-1
129C26-01890	2	11 -2
		27
	76	6 -2
	91	12
		26
144626-91570	49	14
145410-46190	29	8
145610-39290	69	2
145640-44570	32	3
148616-07350	86	3
158600-51270	37	23 -1
158600-51410	37	36 -1
158600-51420	37	37 -1
158600-51570	37	46 -1
158600-51790	37	54 -1
171008-77010	47	1
	55	1
171008-77400	55	2
171008-77410	55	3
171008-77420	55	4
171008-77430	55	5
171008-77440	55	6
171008-77450	55	7
171008-77460	55	8
171008-77470	55	9
171008-77480	55	10

Parts No.	Fig. No.	Ref. No.
171008-77490	55	11
171008-77500	55	12
171008-77510	55	13
171008-77520	55	14
171008-77530	55	15
171008-77540	55	16
171008-77550	55	17
171008-77560	55	18
171008-77570	55	19
171008-77580	55	20
171008-77590	55	21
171008-77600	55	22
171008-77610	55	23
171008-77620	55	24
171008-77630	55	25
171008-77640	55	26
171008-77650	55	27
171008-77660	55	28
171008-77670	55	29
171008-77680	55	30
171008-77690	55	31
171008-77700	55	32
171008-77720	55	33
171008-77730	55	34
171008-77740	55	35
171008-77750	55	36
171051-01921	1	5
174307-51170	37	10
174307-51560	37	45
177040-03080	80	1
177070-02012	77	1
177070-02020	77	1 -1
177070-02070	77	2
177070-03031	78	2
177070-03041	79	1
177070-03071	79	2
177070-03112	79	4
177070-03131	79	3
177070-03190	79	5
177070-03200	79	6
177070-03231	79	7
177070-03250	79	8
177070-03302	78	3
177070-03510	51	5
177070-03511	51	5 -1
177070-03550	79	10
177070-03651	80	3
177070-03660	80	4
177070-03670	80	5
177070-03681	80	6

Parts No.	Fig. No.	Ref. No.
177070-03691	80	7
177070-03700	80	8
177070-03741	80	9
177070-03750	80	10
177070-06600	82	1
177073-03340	79	16
177073-06200	81	1
177088-02120	77	3
177088-02300	77	4
177088-02350	77	5
177088-02400	77	6
177088-02451	77	7
177088-02950	77	8
177088-02961	77	9
177088-03272	79	9
177088-03280	79	14
177088-03290	79	13
177088-03311	78	4
177088-03331	78	5
177088-03341	78	6
177088-03400	78	1
177088-03540	79	15
177088-06340	81	2
177088-06360	81	6
177088-06370	81	7
177088-06380	81	8
177088-06390	81	9
177088-06400	81	10
177090-03090	80	2
196322-06610	81	4
196630-12980	9	9
	86	4
198220-51870	42	14
198451-78680	84	42 A
	85	47 A
22117-040000	44	48
		48 -1
	93	59
22117-080000	2	13
	3	5 -1
22117-120000	3	5
22131-050000	24	4
	87	15
22137-060000	81	11
	87	20
22137-080000	35	8
	48	13
	49	8
	66	3
	88	43

Parts No.	Fig. No.	Ref. No.
22137-080000	90	28
22137-100000	3	11
	69	26
	90	29
22190-060002	44	56
	93	66
22190-060003	93	66 -1
22190-080000	80	11
22190-080002	2	18 B
	28	7 B-1
		9 -2
	42	10 -1
	43	13 -1
	67	4
	91	7
22190-100000	44	49
22190-100002	28	10 -1
	93	60
22190-120002	42	11 -1
		11 -2
	43	14 -1
22190-140002	43	15 -1
22190-160002	37	68 -1
	87	6
22212-050000	24	5
	87	16
22212-120000	73	14
22212-140000	61	5
22217-050000	37	69
	44	50
	46	7
	53	7
	82	2
22217-060000	37	59
	87	21
22217-080000	30	6
	46	8
	49	9
	66	4
22217-120000	21	2
	64	2
22242-000100	46	6
22242-000180	69	27
22242-000200	69	28
22242-000300	73	5
22252-000420	29	9
	69	29
22272-000040	44	51
	93	48 B
		61

Parts No. Index

Parts No.	Fig. No.	Ref. No.
22272-000060	44	52
	93	62
22282-120000	44	53
22287-080000	3	6 -1
22287-120000	3	6
	93	63
22312-030160	58	4
	92	12
22312-080160	1	12
	3	9
	17	5
	63	5
22312-100160	77	11
22312-100500	69	30
		31
22351-020004	93	48 C
22351-020012	81	5
22351-030016	44	54
	93	64
22351-040012	69	23
22351-050010	37	61
22351-060012	1	15
	11	40
22360-050000	44	55
22372-040000	44	55 -1
	93	65
22414-250150	45	2
	46	9
22417-160120	81	12
22512-050120	69	32
22512-070140	15	5
		11
	16	4
22512-070160	16	9
22512-070552	73	6
23000-013000	43	2
		16 -2
		16 -3
		18
		19
23000-016000	7	11
	42	9 -1
	43	2 -1
		2 -2
		12 -1
	66	5
	67	2
23000-019000	28	8
23000-022000	7	12
23000-035000	34	7

Parts No.	Fig. No.	Ref. No.
23000-035000	34	10
23000-041000	35	6
	88	44
23010-013000	32	4
23061-070300	1	20
	31	23
	34	8
	88	33
23072-100060	34	11
23072-101100	88	50
23080-013000	42	9
	43	12
23297-180081	49	5 -1
23414-060000	69	33
23414-080000	2	14
	28	7 B
		9
		9 -1
	42	10
	43	13
	46	10
	66	22
23414-100000	28	10
	77	12
23414-100014	44	63
	93	72
23414-120000	42	11
	43	14
23414-140000	43	15
	66	6
23414-160000	23	3
23414-170000	31	7 A
	88	21
23857-060000	42	12
23857-080000	66	7
23871-010000	49	11
		11 -1
23871-060000	88	3
23875-030000	4	12
	30	2 C
	87	7
23876-010000	1	6
23876-030000	11	10
23887-080002	66	21
23887-100002	44	57
	77	13
	93	67
23894-030002	31	7 B
	88	22
24101-062024	29	11

Parts No.	Fig. No.	Ref. No.
24101-063024	29	10
24102-060044	69	34
24102-062064	73	7
24102-062074	73	8
24107-060054	69	8
24141-302050	79	12
24190-200001	7	4
	12	7
	92	13
24311-000070	58	5
	92	14
24311-000080	44	64
24311-000120	12	13
	62	4
	66	18
	92	17
24311-000150	29	13
24311-000160	2	6
	26	13
	76	5
		21
	91	15
24311-000180	77	14
24311-000200	26	14
	76	22
24311-000210	79	11
24311-000255	88	48
24311-000320	2	15
	12	11 -1
	91	16
24311-000340	80	12
24311-240100	44	64 -1
	93	73
24316-000150	37	31 -1
24321-000400	77	15
24321-000750	31	17
	76	23
	88	29
24341-000120	78	7
24341-000160	37	62
24341-000240	2	16 -1
	91	23
24341-000260	2	16
24341-000500	7	5
	12	8
	92	15
24341-000600	29	15
	98	23
24341-001050	80	13
24358-240310	30	2 B-2

Parts No.	Fig. No.	Ref. No.
24421-203508	29	12
24421-284008	77	16
24754-200010	69	35
24754-320020	73	9
25132-004500	30	7
	98	24
	99	20
25152-004400	30	7 -1
25210-430620	69	36
26013-080652	30	11 -1
		11 -2
26014-080652	90	30
26016-080252	77	17
26016-080302	77	18
26022-050102	37	65
		66
	93	75
26022-050122	37	65 -1
		66 -1
26022-060162	37	63
26023-050102	93	76
26106-060102	30	8
	69	37
		38
		39
	93	77
		77 -1
26106-060122	24	8
	87	22
		23
26106-060142	30	2 F
26106-060162	2	17
	91	24
26106-060202	30	2 G
	44	58
	93	68
26106-060322	55	37
26106-060402	55	38
26106-080122	2	18
	7	13
	32	5
	46	11
26106-080142	6	3 -1
		3 -2
	8	3
	15	12
	31	16
26106-080162	2	18 A
		19
	6	3

Parts No. Index

Parts No.	Fig. No.	Ref. No.
26106-080162	8	3 -1
		3 -2
		4
	29	19
	31	16 -1
	34	9
	49	10
	51	3
	88	30
	91	8
		17
26106-080202	7	6
	12	9
	29	20
	69	40
	88	31
	92	16
26106-080252	2	28
	11	41
	13	6
	31	18
	36	5
	46	12
	69	24
		41
	81	13
	91	27
	94	12
26106-080302	13	7
	69	45
26106-080352	13	8
	36	6
	48	6
26106-080402	66	8
	90	31
26106-080452	2	20
	20	5
	69	42
	80	14
	91	18
26106-080502	11	42
	26	15
26106-080552	2	21
	30	9
		10 -1
	69	46
	91	19
26106-080602	30	10
26106-080652	30	11
26106-080702	69	47

Parts No.	Fig. No.	Ref. No.
26106-080752	4	7
		8
		9
	87	25
		26
		27
26106-080852	2	22
	25	6
	87	35
	91	20
26106-080902	4	10
26106-080952	87	28
26106-081002	31	24
	88	34
26106-081202	48	7
26106-100162	23	4
26106-100202	10	4
	60	3
	66	9
26106-100252	4	11
	52	5 -1
	87	29
26106-100302	3	7
	40	4
	51	4
	69	43
		48
26106-100322	52	2
		5
		5 -2
26106-100752	90	32
26106-100802	57	2
26116-050122	24	6
	87	17
26116-050142	45	3
26116-050302	37	70
26116-060162	30	2 H
		2 H-1
26116-080202	3	8 -1
26116-120252	3	8
	10	5 -1
	60	4 -1
26116-120302	10	5
	47	3
	60	4
26156-120252	73	15
26203-060102	29	16
26206-100302	3	7 -1
26216-060162	37	64
26216-060202	11	11

Parts No.	Fig. No.	Ref. No.
26216-060202	11	49
26216-080182	2	23
26216-081002	11	22
		47
26226-080182	11	36
26226-100202	51	6
26306-080002	2	24 -1
		29
	29	21 -1
	31	20 -1
	46	13 -1
	66	10 -1
	88	35
	91	21
		28
26306-100002	51	7
	90	33
26366-060002	90	34
26366-080002	2	24
	29	21
	31	20
	44	59
	46	13
	66	10
	93	69
26367-060002	11	23
		48
26376-100002	69	44
26450-060252	22	3
26450-080162	73	16
26556-060122	83	44
	84	50
	85	54
26557-040122	56	18
26557-050102	44	60
26557-050122	46	14
26557-050142	56	14
26557-050162	82	3
26559-060122	83	43
	84	49
	85	53
26577-060142	30	2 F-1
26703-080002	14	8
	88	10
26706-100002	52	3
		6
		7
	66	11
26712-050002	24	7
	87	18

Parts No.	Fig. No.	Ref. No.
26716-050002	46	15
	53	6
	82	4
26716-060002	37	67
	83	45
	84	51
	85	55
26716-080002	48	8
		9
26716-120002	21	3
	64	3
	74	5
26716-140002	61	6
26756-050002	45	4
26756-060002	93	70
26756-080002	47	4
26757-060002	44	61
26776-120002	44	62
	93	71
27225-100140	1	7
27231-500000	1	8
27233-250000	14	3
	88	4
27241-100000	11	35
27241-120000	1	9
27241-220000	11	12
27241-280000	31	6
	88	23
27241-300000	1	10
27241-400000	11	13
	31	7
	88	24
27310-080001	11	18 -1
	75	9 -1
27730-301400	72	2 -1
28110-080100	54	11
28110-100130	54	3
		12
28110-120140	54	4
		13
28110-170190	54	5
		14
28110-220240	54	6
28150-060000	73	17
28150-080000	73	18
41701-001720	46	16
41710-000380	72	2
41710-000410	46	17
	82	5
41730-000680	71	1

Parts No. Index

Parts No.	Fig. No.	Ref. No.
41730-000681	71	1 -1
42130-501420	23	5
42430-550060	66	16
43400-500490	37	68
43530-500570	33	1
43580-500680	49	2 -1
43623-500030	66	12
43662-025030	33	2
43662-025031	33	2 -1
43720-001220	27	2
45423-500731	73	19
711100-51540	37	14
719195-92500	54	8
720445-44200	32	1
724772-92100	54	1
729100-11520	12	1
729100-53000	39	1
729120-22500	18	3
	98	6
	99	6
729120-22540	18	11
729150-11651	11	26
729150-23701	19	1
729170-01560	1	1
729170-44500	31	1
729198-11710	11	1 -1
729198-51300	37	1
729198-51320	37	2
729198-53100	39	1 -1
729198-76650	69	19
729198-76710	69	1
729198-92500	75	1
729198-92600	76	1
729198-92605	76	1 -1
729402-11650	11	26 -1
729402-22910	18	9
947859-20010	65	13
977780-01200	96	1
977780-01210	95	1
977780-01211	95	1 -1
	96	1 -1
	97	1
977780-01230	95	2
	96	2
977780-01240	96	3
977780-01250	95	3
977780-03000	95	9
	96	9
	97	9
977782-00121	65	1

Parts No.	Fig. No.	Ref. No.
X0044021509	95	7
	96	7
	97	7
X0225000630	32	1 B
X0300120414	66	30
X0311121522	66	28
X0313080110	66	34
X0313080922	66	34 -1
X0314080110	66	32
X0318101004	97	2
X0580121073	66	29
X0582810173	66	26
X0588080273	66	33
X0600160122	66	20
		31
X0993070671	66	35
X0993071171	66	35 -1
X158606410X	97	3
X179100011X	96	5
X179100021X	95	5
X179100022X	97	5
X179100100X	95	6
	96	6
	97	6
X199903800X	95	8
	96	8
X199906101X	97	8
X2114535200	89	12
X2740134001	66	13
		24
X2740134002	66	24 -1
X6201SD	56	3
X6302BM	56	17
X8636008003	95	4
	96	4
X8636015001	97	4
X9490561001	90	3
XB495469B	56	22
XBP1901300	65	4
XBP1901820	65	8
XBP1901830	65	9
XBP1901910	65	10
XBP1901920	65	11
XBP1901950	65	12
XBP1902200	65	3
XBP1902400	65	5
XBP1902810	65	7
XBP1905500	65	6
XL12010001	56	23
XL12013262	56	10

Parts No.	Fig. No.	Ref. No.
XL1254801	56	20
XL1255801	56	21
XL13513134	56	13
XL13513152	56	8
XL13514042	56	16
XL1352318	56	11
XL13525001	56	19
XL1353320	56	7
XL13542001	56	4
XL1354326	56	9
XL13561001	56	2
XL13563003	56	5
XL1358301	56	6
XL1359400	56	15
XTR1Z63	56	12

Parts No.	Fig. No.	Ref. No.