YANMAR

PARTS CATALOG

0CF10-M50402EN

Last update May., 2013

Introduction

1. This parts catalog for 1GM10(YMI),1GM10C,1GM10,1GM10VE,1GM10L is published as a revised edition of the Diesel engine.

	Parts catalog No.	Date of issue	Remarks
First edition	000Y00F5040		No need
1st revised edition	000Y00F5041	Mar.,1995	No need
2nd revised edition	0CF10-G50402	Nov.,2012	

2. Standard finish color. Yanmar ecole silver Metallic

Parts No.	977620-10070	1L(Packed in a can)
Parts No.	977620-40070	4L(Packed in a can)
Parts No.	977620-30330	Spray(1 piece)

3. This parts catalog does not contain the technical data needed for maintenance service.

4. The illustrations used in this parts catalog have been simplified for clarity.

5. The essential points list

Model name(new)	Model name(old)	Column	Specification	Destination
1GM10(YMI)	1GM10	A	Marine main engine (Marine gear spec.)	For export
1GM10C		B	Marine main engine (Sail drive spec.)	For export
1GM10	1GM10B	C	Marine main engine (Marine gear spec.)	Domestic use
1GM10VE		D	Marine main engine (Marine gear spec.)	Domestic use
1GM10L		E	Marine aux.engine	

6. The contents of this parts catalog are subject to change without notice.

7. Be sure to use only Yanmar genuine part for repairs.If imitation parts are used, it may cause engine defects.

Contents

Fig. No.	Fig. Name
1GM10(C/VE/L)	
1.	CYLINDER BLOCK
2.	GEAR HOUSING
3.	LUB.OIL SUMP
4.	FLYWHEEL HOUSING
5.	FLYWHEEL HOUSING
6.	MAIN BEARING HOUSING
7.	BREATHER
8.	LABEL
9.	ENGINE LIFTER
10.	ENGINE BRACKET
11.	ENGINE BRACKET
12.	ENGINE BRACKET
13.	FLEXIBLE MOUNT
14.	ANTI-CORROSIVE ZINC
15.	CYLINDER HEAD
16.	BONNET
17.	AIR INTAKE SILENCER
18.	MIXING ELBOW
19.	CAMSHAFT
20.	CAMSHAFT
21.	CRANKSHAFT & FLYWHEEL
22.	CRANKSHAFT & FLYWHEEL
23.	PISTON
24.	CONNECTING ROD
25.	LUB.OIL PUMP
26.	LUB.OIL DIPSTICK
27.	LUB.OIL STRAINER
28.	L.O.PRESS.REGULATING VALVE
29.	LUB.OIL PIPE
30.	COOLING PUMP(SEA WATER)
31.	KINGSTON COCK(OPTIONAL)
32.	COOLING SEA WATER PIPE
33.	THERMOSTAT
34.	COOLING WATER PIPE
35.	FUEL INJECTION PUMP
36.	FUEL INJECTION PUMP
37.	FUEL FEED PUMP
38.	FUEL INJECTION VALVE
39.	FUEL STRAINER
40.	FUEL STRAINER
41.	FUEL INJECTION PIPE
42.	FUEL PIPE
43.	FUEL PIPE
44.	GOVERNOR DRIVING
45.	GOVERNOR DRIVING
46.	CONTROL DEVICE
47.	CONTROL DEVICE
48.	IDLE ADJUSTER
49.	FUEL CONTROL DEVICE

Contents

0CF10-M50402

Fig. No.	Fig. Name
50.	ENGINE STOP DEVICE
51.	SPEED REMOTE CONTROL
52.	SPEED REMOTE CONTROL
53.	HAND START
54.	STARTING MOTOR
55.	STARTING MOTOR
56.	GENERATOR(HITACHI)
57.	BATTERY SWITCH(OPTIONAL)
58.	WIRE HARNESS
59.	WIRE HARNESS
60.	CLUTCH & DUMPER DISK
61.	DUMPER DISK(FOR SAIL DRIVE)
62.	TAPER COUPLING(OPTIONAL)
63.	CLUTCH REMOTE CONTROL
64.	PANEL(A-TYPE)
65.	TOOL
66.	STARTING MOTOR COMPONENT PARTS
67.	STARTING MOTOR COMPONENT PARTS
68.	GENERATOR COMPONENT PARTS(HITA
69.	LUB.OIL WASTE PUMP(OPTIONAL)
70.	BILGE PUMP(OPTIONAL)(UP TO JUL
71.	FUEL TANK(OPTIONAL)
72.	ENGINE STOP CABLE(OPTIONAL)
73.	COUPLING(OPTIONAL)
74.	STRAIGHT COUPLING(OPTIONAL)
75.	SLIT COUPLING(OPTIONAL)
76.	SINGLE LEVER CONTROL(OPTIONAL)
77.	MORSE CABLE(OPTIONAL)
78.	PANEL(B-TYPE/OPTIONAL)(UP TO N
79.	PANEL(B-TYPE/OPTIONAL)(FROM DE
80.	INSTRUMENT PANEL(A-TYPE)(OPTIONAL)
81.	PANEL(A-TYPE)(OPTIONAL)
82.	EXTENSION WIRE(OPTIONAL)
83.	SPECIAL TOOL(OPTIONAL)
84.	SPARE PARTS(OPTIONAL)
85.	GASKET SET(OPTIONAL)
86.	SAFETY LABEL
87.	GENERATOR(DENSO)
88.	(68A)GENERATOR COMPONENT PARTS
89.	(70A)BILGE PUMP(OPTIONAL)(FROM
90.	(70B)BILGE PUMP(OPTIONAL)(FROM
91.	(70C)BILGE PUMP(OPTIONAL)(FROM
92.	(79A)INSTRUMENT PANEL(B-TYPE/V
93.	(79B)INSTRUMENT PANEL(B-TYPE/K
94.	(79C)INSTRUMENT PANEL(B-TYPE/M
95.	(79D)STARTER RELAY(FOR MEDALLI
96.	GENERATOR(INNER PARTS)(DENSO/40A)

Fig.1. CYLINDER BLOCK

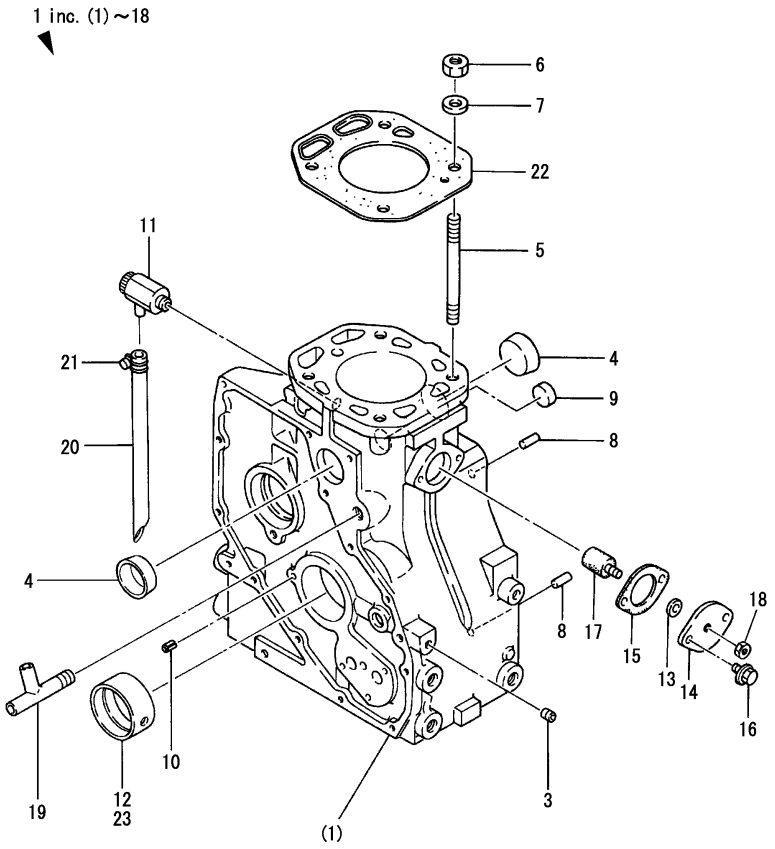

(A)=1GM10(YMI) (D)=1GM10VE
(B)=1GM10C (E)=1GM10L
(C)=1GM10 (F)=

No.	Lev.	Parts No.	Description	Q'ty (A)	(B)	(C)	(D)	(E)	(F)	I	R
1	1	728171-01560	BLOCK ASSY, CYLINDER	1	1	1		1			
1-1	1	728171-01561	BLOCK ASSY, CYLINDER	1	1	1	1	1		N	
	(A=E08575)	(B=E00833)	(C=E00749)	(E=E00336)							
3	2	124060-01050	PLUG, PT1/8	1	1	1	1	1			
4	2	105311-01090	PLUG, 30	2	2	2	2	2			
5	2	128170-01200	BOLT, CYLINDER HEAD	4	4	4	4	4			
6	2	105025-01220	NUT, HEAD M10	4	4	4	4	4			
7	2	105425-01250	WASHER, HEAD BOLT	4	4	4	4	4			
8	2	22312-080160	PIN, PARALLEL M8X16	2	2	2	2	2			
8-1	2	129100-01580	PIN, PARALLEL 8X16	2	2	2	2	2		R	
	(A=EXXXXX)	(B=EXXXXX)	(C=EXXXXX) (D=EXXXXX)	(E=EXXXXX)							
9	2	27241-200000	PLUG, 20	1	1	1	1	1			
10	2	22351-040008	PIN, SPRING 4.0X 8	1	1	1	1	1			
11	2	120130-49350	COCK, 1/4	1	1	1	1	1			
11-1	2	119620-49290	COCK ASSY, 1/4	1	1	1	1	1		N	
	(A=EXXXXX)	(B=EXXXXX)	(C=EXXXXX) (D=EXXXXX)	(E=EXXXXX)							
12	2	121450-02100	METAL, MAIN	1	1	1	1	1			
13	2	123210-09310	GASKET, ZINC	1	1	1	1	1			
14	2	128170-09320	FLANGE, ZINC	1	1	1	1	1			
15	2	104211-49160	GASKET, THERMO COVER	1	1	1	1	1			
16	2	26106-060122	BOLT, M6X 12 PLATED	2	2	2	2	2			
17	2	27210-200200	ZINC, SCREW20X20	1	1	1	1	1			
18	2	26756-080002	NUT, LOCK M8	1	1	1	1	1			
19	1	105582-49090	JOINT, 3-WAY	1	1	1	1	1			
20	1	23061-070200	PIPE, 7X 200	1	1	1	1	1			
21	1	124460-77680	RETAINER, FUEL PIPE	1	1	1	1	1			
22	1	128171-01330	GASKET, HEAD	1	1	1		1			
22-1	1	128171-01911	GASKET, HEAD	1	1	1	1	1		N	
	(A=E05917)	(B=E00566)	(C=E00509)	(E=E00250)							
23	1	121450-02310	METAL, MAIN 0.25 US	1	1	1	1	1			1

Remarks
(1)Under sized(U.S.=0.25)parts.

N:Old ◄Yes/No► New, Q:Old ◄No/Yes► New, R:Old ◄Yes/Yes► New, S:Old ◄No/No► New, W:Add, Z:Discontinued, F:Interchangeable by set, K:Q'ty Change

Copyright (C) YANMAR CO., LTD. All RightsReserved.

Fig.2. GEAR HOUSING

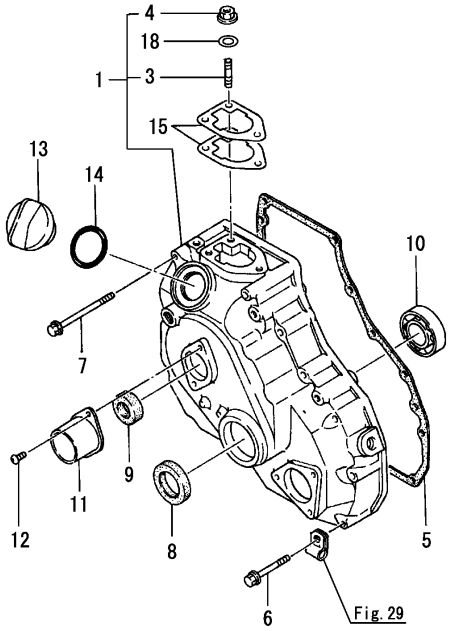

(A)=1GM10(YMI) (D)=1GM10VE
(B)=1GM10C (E)=1GM10L
(C)=1GM10 (F)=

No.	Lev.	Parts No.	Description	Q'ty (A)	(B)	(C)	(D)	(E)	(F)	I	R
1	1	728170-01610	CASE ASSY, GEAR	1	1	1		1			
1-1	1	728170-01611	CASE ASSY, GEAR	1	1	1	1	1		N	
	(A=E08179)	(B=E00818)	(C=E00749)		(E=E00326)						
3	2	26216-080222	STUD, M8X 22	3	3	3	3	3			
4	2	26366-080002	NUT, M8	3	3	3	3	3			
4-1	2	26306-080002	NUT, M8	3	3	3	3	3		N	
	(A=EXXXXX)	(B=EXXXXX)	(C=EXXXXX) (D=EXXXXX)		(E=EXXXXX)						
5	1	128170-01510	GASKET, GEAR CASE	1	1	1		1			
5-1	1	128170-01511	GASKET, GEAR CASE	1	1	1	1	1		N	
	(A=E10132)	(B=E01035)	(C=E01032)		(E=E00349)						
6	1	26106-060502	BOLT, M6X 50 PLATED	7	7	7	7	7			
7	1	26106-060802	BOLT, M6X 80 PLATED	5	5	5	5	5			
8	1	121450-01801	SEAL, OIL TC25408	1	1	1	1	1			
9	1	129795-42820	SEAL, OIL TC173008	1	1	1	1	1			
10	1	24101-060054	BEARING, BALL 6005	1	1	1	1	1			
11	1	128170-01830	COVER, START SHAFT	1	1	1	1	1			
12	1	26557-060102	SCREW, M6X10	2	2	2	2	2			
13	1	124160-01751	CAP, FILLER	1	1	1	1	1			
14	1	24321-000350	O-RING, 1AG35.0	1	1	1	1	1			
15	1	104271-01950	SHIM SET,0.2X3,0.3X2	1	1	1	1	1			
18	1	23414-080000	GASKET, 8X1.0	3	3	3	3	3		W	
	(A=EXXXXX)	(B=EXXXXX)	(C=EXXXXX) (D=EXXXXX)		(E=EXXXXX)						

N:Old $\overset{\text{Yes}}{\underset{\text{No}}{\leftrightarrow}}$ New, Q:Old $\overset{\text{No}}{\underset{\text{Yes}}{\leftrightarrow}}$ New, R:Old $\overset{\text{Yes}}{\underset{\text{Yes}}{\leftrightarrow}}$ New, S:Old $\overset{\text{No}}{\underset{\text{No}}{\leftrightarrow}}$ New, W:Add, Z:Discontinued, F:Interchangeable by set, K:Q'ty Change

Copyright (C) YANMAR CO., LTD. All RightsReserved.

Fig.3. LUB.OIL SUMP

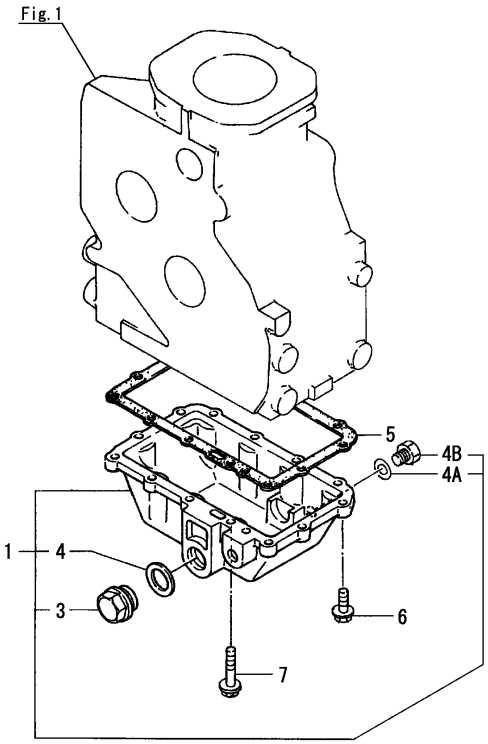

(A)=1GM10(YMI) (D)=1GM10VE
(B)=1GM10C (E)=1GM10L
(C)=1GM10 (F)=

No.	Lev.	Parts No.	Description	Q'ty (A)	(B)	(C)	(D)	(E)	(F)	I	R
1	1	728170-01540	SUMP ASSY, OIL	1	1	1		1			
1-1	1	728170-01541	OIL PAN ASSY	1	1	1	1	1		N	
	(A=E07900)	(B=E00807)	(C=E00749)	(E=E00325)							
3	2	105430-01690	PLUG, DRAIN	1	1	1	1	1			
4	2	22190-240002	WASHER, SEAL 24	1	1	1	1	1			
4A	2	23414-120016	GASKET, 12X1.0	1	1	1	1	1		W	
	(A=E07900)	(B=E00807)	(C=E00749)	(E=E00325)							
4B	2	23887-120002	PLUG, 12	1	1	1	1	1		W	
	(A=E07900)	(B=E00807)	(C=E00749)	(E=E00325)							
5	1	128170-01750	GASKET, OIL SUMP	1	1	1		1			
5-1	1	128170-01751	GASKET, OIL PAN	1	1	1	1	1		N	
	(A=E10132)	(B=E01035)	(C=E01032)	(E=E00349)							
6	1	26106-060182	BOLT, M6X 18 PLATED	12	12	12	12	12			
7	1	26106-060322	BOLT, M6X 32 PLATED	1	1	1	1	1			

N:Old $\xleftarrow[\text{No}]{\text{Yes}}$ New, Q:Old $\xleftarrow[\text{Yes}]{\text{No}}$ New, R:Old $\xleftarrow[\text{Yes}]{\text{Yes}}$ New, S:Old $\xleftarrow[\text{No}]{\text{No}}$ New, W:Add, Z:Discontinued, F:Interchangeable by set, K:Q'ty Change

Copyright (C) YANMAR CO., LTD. All RightsReserved.

Fig.4. FLYWHEEL HOUSING

(A)=1GM10(YMI)
(B)=1GM10C
(C)=1GM10
(D)=1GM10VE
(E)=1GM10L
(F)=

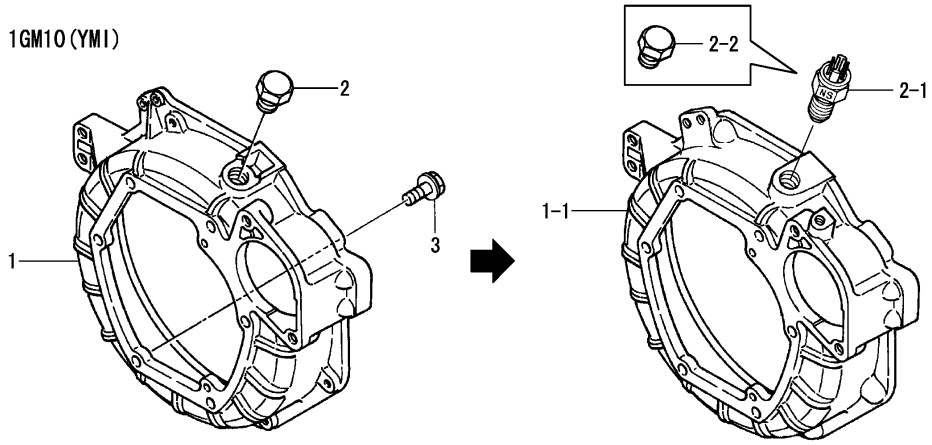

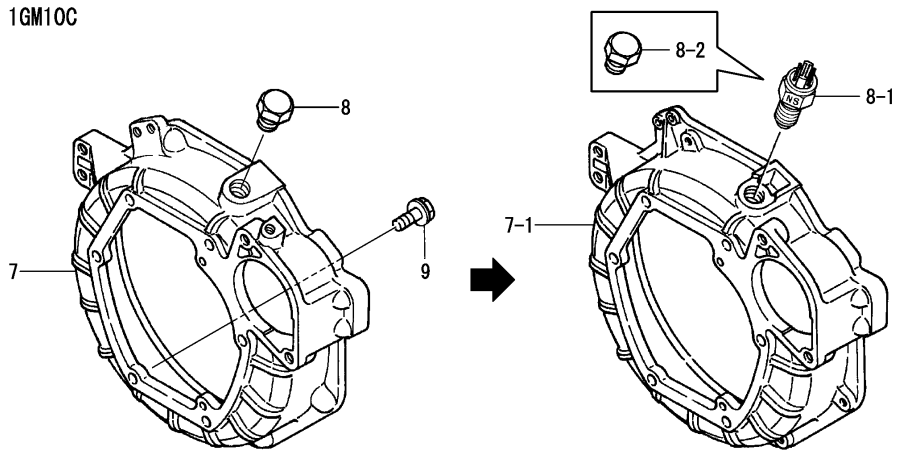

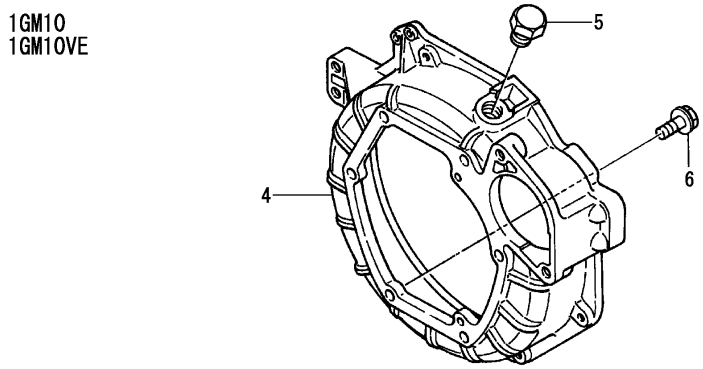

No.	Lev.	Parts No.	Description	Q'ty (A)	(B)	(C)	(D)	(E)	(F)	I	R
1	1	128170-01600	FLANGE, MOUNTING	1							
1-1	1	128371-01601	FLANGE, MOUNTING	1						S	
	(A=E23998)										
2	1	23887-180002	PLUG, 18	1							
2-1	1	128170-91160	SENSOR, TACHOMETER	1						S	
	(A=E23998)										
2-2	1	23887-180002	PLUG, 18	1						S	
	(A=EZZZZZ)										
3	1	26106-100252	BOLT, M10X 25 PLATED	6						Z	
	(A=E23998)										
4	1	128170-01600	FLANGE, MOUNTING			1	1				
5	1	23887-180002	PLUG, 18			1	1				
6	1	26106-100252	BOLT, M10X 25 PLATED			6	6				
7	1	128371-01601	FLANGE, MOUNTING		1						
7-1	1	128170-01600	FLANGE, MOUNTING		1					S	
		(B=E04164)									
8	1	23887-180002	PLUG, 18		1						
8-1	1	128170-91160	SENSOR, TACHOMETER		1					S	
		(B=E04164)									
8-2	1	23887-180002	PLUG, 18		1					S	
		(B=EZZZZZ)									
9	1	26013-100252	BOLT, M10X 25		8					Z	
		(B=E04164)									

N:Old $\frac{\text{Yes}}{\text{No}}$ New, Q:Old $\frac{\text{No}}{\text{Yes}}$ New, R:Old $\frac{\text{Yes}}{\text{Yes}}$ New, S:Old $\frac{\text{No}}{\text{No}}$ New, W:Add, Z:Discontinued, F:Interchangeable by set, K:Q'ty Change

Copyright (C) YANMAR CO., LTD. All RightsReserved.

Fig.5. FLYWHEEL HOUSING

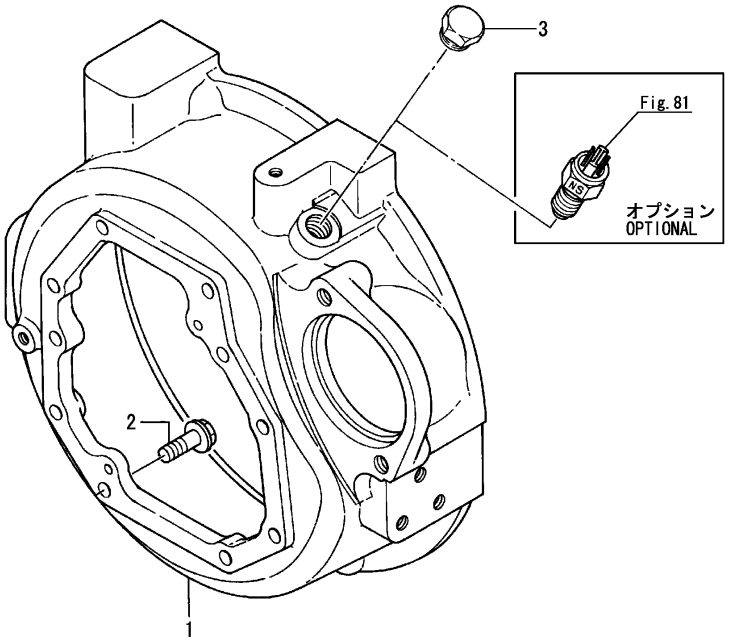

(A)=1GM10(YMI) (D)=1GM10VE
(B)=1GM10C (E)=1GM10L
(C)=1GM10 (F)=

No.	Lev.	Parts No.	Description	Q'ty (A)	(B)	(C)	(D)	(E)	(F)	I	R
1	1	128172-01600	FLANGE, MOUNTING					1			
1-1	1	128172-01601	FLANGE, MOUNTING (E=E00155)					1		N	
2	1	26106-100302	BOLT, M10X 30 PLATED					8			
3	1	23887-180002	PLUG, 18					1			

N:Old $\frac{\text{Yes}}{\text{No}}$ New, Q:Old $\frac{\text{No}}{\text{Yes}}$ New, R:Old $\frac{\text{Yes}}{\text{Yes}}$ New, S:Old $\frac{\text{No}}{\text{No}}$ New, W:Add, Z:Discontinued, F:Interchangeable by set, K:Q'ty Change

Copyright (C) YANMAR CO., LTD. All RightsReserved.

Fig.6. MAIN BEARING HOUSING

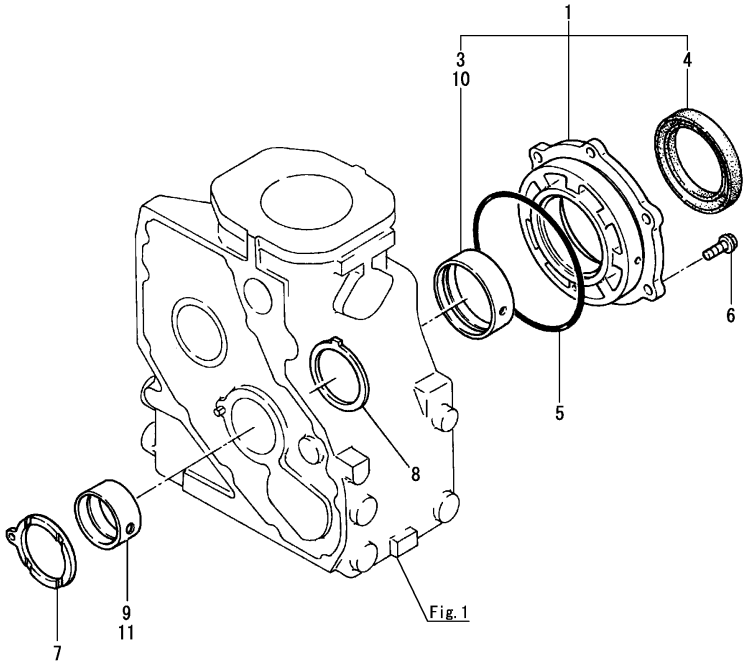

(A)=1GM10(YMI) (D)=1GM10VE
(B)=1GM10C (E)=1GM10L
(C)=1GM10 (F)=

No.	Lev.	Parts No.	Description	Q'ty (A)	(B)	(C)	(D)	(E)	(F)	I	R
1	1	728170-02500	HOUSING ASSY, METAL	1	1	1	1	1			
3	2	121450-02110	METAL, MAIN	1	1	1	1	1			
4	2	124085-02220	SEAL, METAL HOUSING	1	1	1	1	1			
5	1	105225-02020	O-RING	1	1	1	1	1			
6	1	26106-080182	BOLT, M8X 18 PLATED	6	6	6		6			
6-1	1	26013-080202	BOLT, M8X 20	6	6	6	6	6		N	
	(A=E10103)	(B=E01018)	(C=E01022)	(E=E00349)							
7	1	128170-02090	METAL, THRUST	1	1	1	1	1			
8	1	104200-02110	METAL, THRUST	1	1	1	1	1			
9	1	121450-02100	METAL, MAIN	1	1	1	1	1			
10	1	121450-02320	METAL ASSY, MAIN .25	1	1	1	1	1			1
11	1	121450-02310	METAL, MAIN 0.25 US	1	1	1	1	1			1

Remarks
(1)Under sized(U.S.=0.25)parts.

N:Old ◄Yes/No► New, Q:Old ◄No/Yes► New, R:Old ◄Yes/Yes► New, S:Old ◄No/No► New, W:Add, Z:Discontinued, F:Interchangeable by set, K:Q'ty Change

Copyright (C) YANMAR CO., LTD. All RightsReserved.

Fig.7. BREATHER

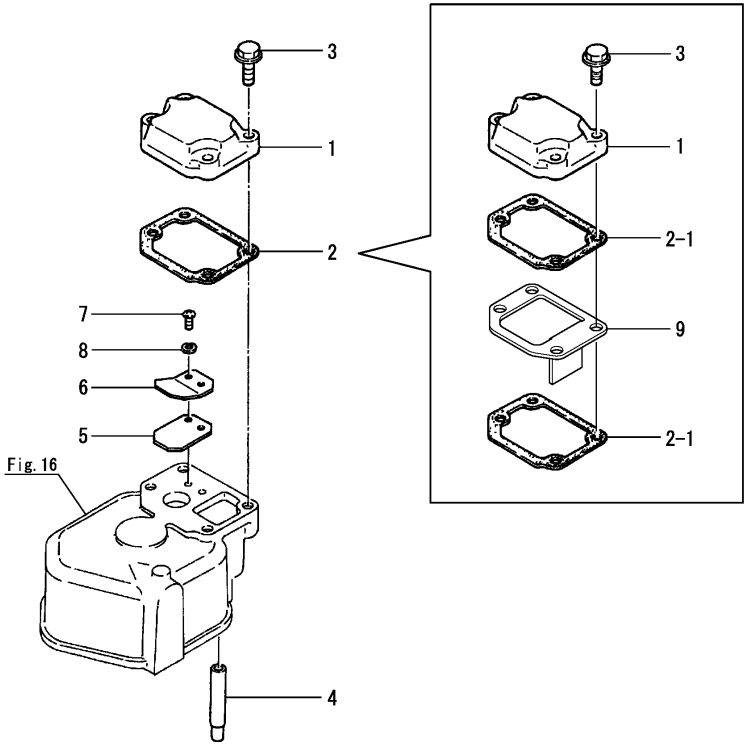

(A)=1GM10(YMI) (D)=1GM10VE
(B)=1GM10C (E)=1GM10L
(C)=1GM10 (F)=

No.	Lev.	Parts No.	Description	Q'ty (A)	(B)	(C)	(D)	(E)	(F)	I	R
1	1	128170-03020	COVER, BREATHER	1	1	1	1	1			
2	1	128170-03070	GASKET, BREATHER	1	1	1	1	1			
2-1	1	128170-03070	GASKET, BREATHER	2	2	2	2	2		K	
	(A=EXXXXX)	(B=EXXXXX)	(C=EXXXXX) (D=EXXXXX)	(E=EXXXXX)							
3	1	26106-060202	BOLT, M6X 20 PLATED	4	4	4	4	4			
4	1	128170-03200	PIPE, BREATHER	1	1	1	1	1			
5	1	101158-03061	VALVE, RETURN	1	1	1	1	1			
6	1	101158-03111	PLATE, BREATHER	1	1	1	1	1			
7	1	26557-040082	SCREW, M4X 8	2	2	2	2	2			
8	1	22217-040000	WASHER, SPRING 4	2	2	2	2	2			
9	1	128170-03080	PLATE, THROWER	1	1	1	1	1		W	
	(A=EXXXXX)	(B=EXXXXX)	(C=EXXXXX) (D=EXXXXX)	(E=EXXXXX)							

N:Old $\overset{\text{Yes}}{\underset{\text{No}}{\leftrightarrow}}$ New, Q:Old $\overset{\text{No}}{\underset{\text{Yes}}{\leftrightarrow}}$ New, R:Old $\overset{\text{Yes}}{\underset{\text{Yes}}{\leftrightarrow}}$ New, S:Old $\overset{\text{No}}{\underset{\text{No}}{\leftrightarrow}}$ New, W:Add, Z:Discontinued, F:Interchangeable by set, K:Q'ty Change

Copyright (C) YANMAR CO., LTD. All RightsReserved.

Fig.8. LABEL

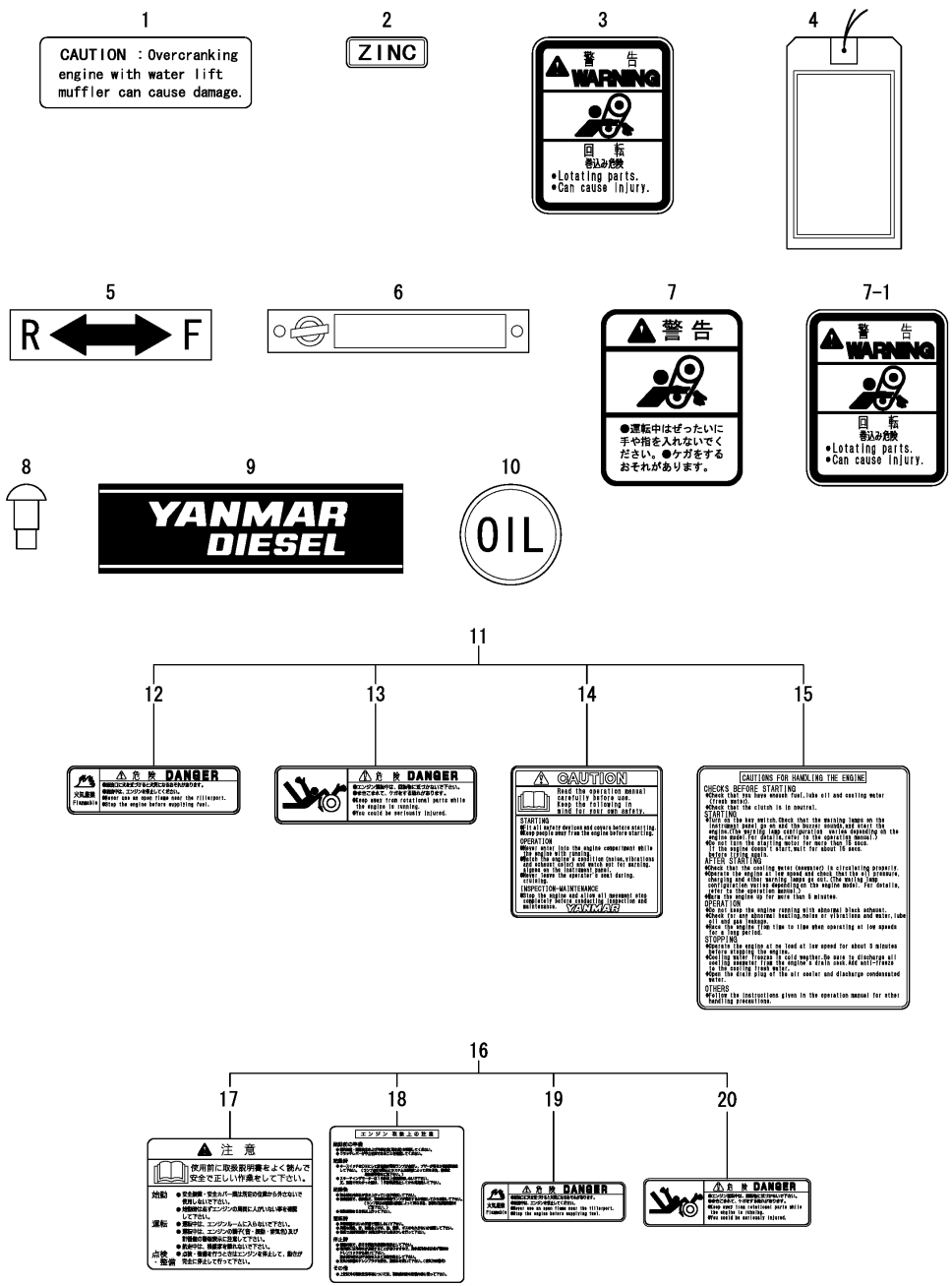

(A)=1GM10(YMI)
(B)=1GM10C
(C)=1GM10
(D)=1GM10VE
(E)=1GM10L
(F)=

No.	Lev.	Parts No.	Description	Q'ty (A)	(B)	(C)	(D)	(E)	(F)	I	R
1	1	128171-07150	LABEL, CAUTION	1	1					W	
	(A=E12509)	(B=E01364)									
2	1	128170-07340	LABEL, ZINC	1	1	1	1	1			
3	1	128296-07350	LABEL, DANGER		1					W	
		(B=EXXXXX)									
4	1	128170-07850	LABEL, HAND START	1	1	1	1				
5	1	177088-02430	LABEL	1		1					
6	1	105582-07061	LABEL			1					
7	1	128176-07250	LABEL, CAUTION	1		1				W	
	(A=EXXXXX)		(C=EXXXXX)								
7-1	1	128296-07350	LABEL, DANGER	1		1				R	
	(A=EXXXXX)		(C=EXXXXX)								
8	1	102210-07990	RIVET			2					
9	1	127610-07990	LABEL			2				W	
			(C=E00725)								
10	1	42222-003550	LABEL, OIL	1		1				Z	
	(A=EXXXXX)		(C=EXXXXX)								
11	1	128296-07190	LABEL, LOOSE PARTS	1	1						
11-1	1	128377-07190	LABEL,LOOSE PARTS	1	1					N	
	(A=E23998)	(B=E04164)									
12	2	128296-07400	LABEL, DANGER	2	2						
12-1	2	128377-07400	LABEL,DANGER	2	2					N	
	(A=E23998)	(B=E04164)									
13	2	128296-07420	LABEL, DANGER	1	1						
13-1	2	128377-07420	LABEL,DANGER	1	1					N	
	(A=E23998)	(B=E04164)									
14	2	128296-07450	LABEL, CAUTION	1	1						
14-1	2	128377-07450	LABEL,CAUTION	1	1					N	
	(A=E23998)	(B=E04164)									
15	2	128296-07460	LABEL, OPERATION	1	1						
15-1	2	128377-07460	LABEL,CAUTION	1	1					N	
	(A=E23998)	(B=E04164)									
16	1	120324-07190	LABEL SET			1				W	
			(C=EXXXXX)								
17	2	120324-07200	LABEL, CAUTION			1				W	
			(C=EXXXXX)								
18	2	120324-07210	LABEL, OPERATION			1				W	
			(C=EXXXXX)								
19	2	128296-07400	LABEL, DANGER			2				W	
			(C=EXXXXX)								
20	2	128296-07420	LABEL, DANGER			1				W	
			(C=EXXXXX)								

N:Old $\xleftarrow[\text{No}]{\text{Yes}}$ New, Q:Old $\xleftarrow[\text{Yes}]{\text{No}}$ New, R:Old $\xleftarrow[\text{Yes}]{\text{Yes}}$ New, S:Old $\xleftarrow[\text{No}]{\text{No}}$ New, W:Add, Z:Discontinued, F:Interchangeable by set, K:Q'ty Change

Copyright (C) YANMAR CO., LTD. All RightsReserved.

Fig.9. ENGINE LIFTER

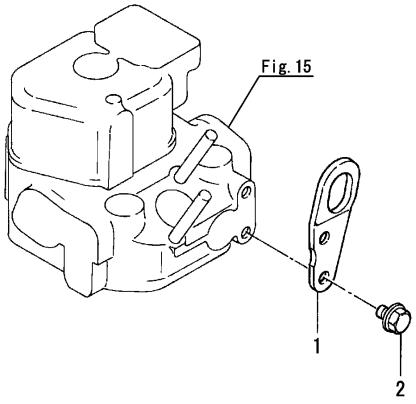

(A)=1GM10(YMI) (D)=1GM10VE
(B)=1GM10C (E)=1GM10L
(C)=1GM10 (F)=

No.	Lev.	Parts No.	Description	Q'ty (A)	(B)	(C)	(D)	(E)	(F)	I	R
1	1	128170-07230	LIFTER	1	1	1	1	1			
2	1	26106-080142	BOLT, M8X 14 PLATED	2	2	2	2	2			

N:Old ◄Yes/No► New, Q:Old ◄No/Yes► New, R:Old ◄Yes/Yes► New, S:Old ◄No/No► New, W:Add, Z:Discontinued, F:Interchangeable by set, K:Q'ty Change

Copyright (C) YANMAR CO., LTD. All RightsReserved.

Fig.10. ENGINE BRACKET

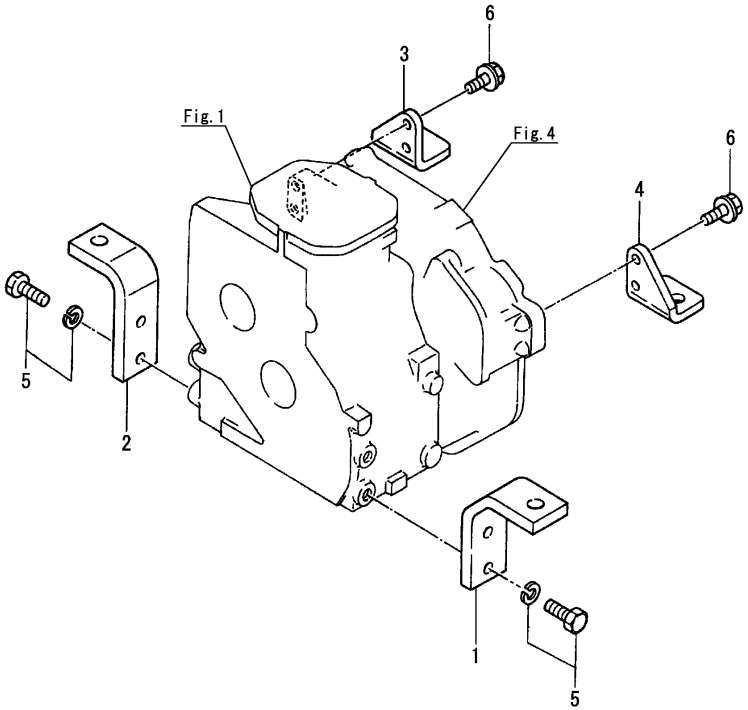

(A)=1GM10(YMI)
(B)=1GM10C
(C)=1GM10
(D)=1GM10VE
(E)=1GM10L
(F)=

No.	Lev.	Parts No.	Description	Q'ty (A)	(B)	(C)	(D)	(E)	(F)	I	R
1	1	128170-08100	FOOT, MOUNTING A	1		1					
2	1	128170-08110	FOOT, MOUNTING B	1		1					
3	1	128170-08120	FOOT, MOUNTING R A	1		1					
4	1	128170-08130	FOOT, MOUNTING R B	1		1					
5	1	26013-120302	BOLT, M12X 30	4		4					
6	1	26106-100252	BOLT, M10X 25 PLATED	4		4					

N:Old $\frac{\text{Yes}}{\text{No}}$ New, Q:Old $\frac{\text{No}}{\text{Yes}}$ New, R:Old $\frac{\text{Yes}}{\text{Yes}}$ New, S:Old $\frac{\text{No}}{\text{No}}$ New, W:Add, Z:Discontinued, F:Interchangeable by set, K:Q'ty Change

Copyright (C) YANMAR CO., LTD. All RightsReserved.

Fig.11. ENGINE BRACKET

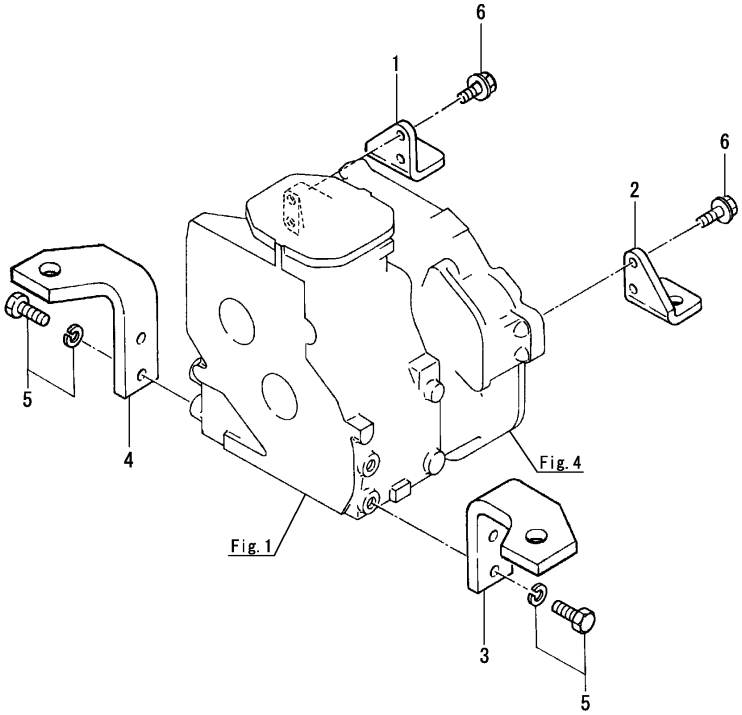

(A)=1GM10(YMI)
(B)=1GM10C
(C)=1GM10
(D)=1GM10VE
(E)=1GM10L
(F)=

No.	Lev.	Parts No.	Description	Q'ty (A)	(B)	(C)	(D)	(E)	(F)	I	R
1	1	128170-08120	FOOT, MOUNTING R A		1	1	1				
2	1	128170-08130	FOOT, MOUNTING R B		1	1	1				
3	1	128171-08150	FOOT, MOUNTING A		1	1	1				
4	1	128171-08160	FOOT, MOUNTING B		1	1	1				
5	1	26013-120302	BOLT, M12X 30		4	4	4				
6	1	26106-100252	BOLT, M10X 25 PLATED		4	4	4				

N:Old $\frac{\text{Yes}}{\text{No}}$ New, Q:Old $\frac{\text{No}}{\text{Yes}}$ New, R:Old $\frac{\text{Yes}}{\text{Yes}}$ New, S:Old $\frac{\text{No}}{\text{No}}$ New, W:Add, Z:Discontinued, F:Interchangeable by set, K:Q'ty Change

Copyright (C) YANMAR CO., LTD. All RightsReserved.

Fig.12. ENGINE BRACKET

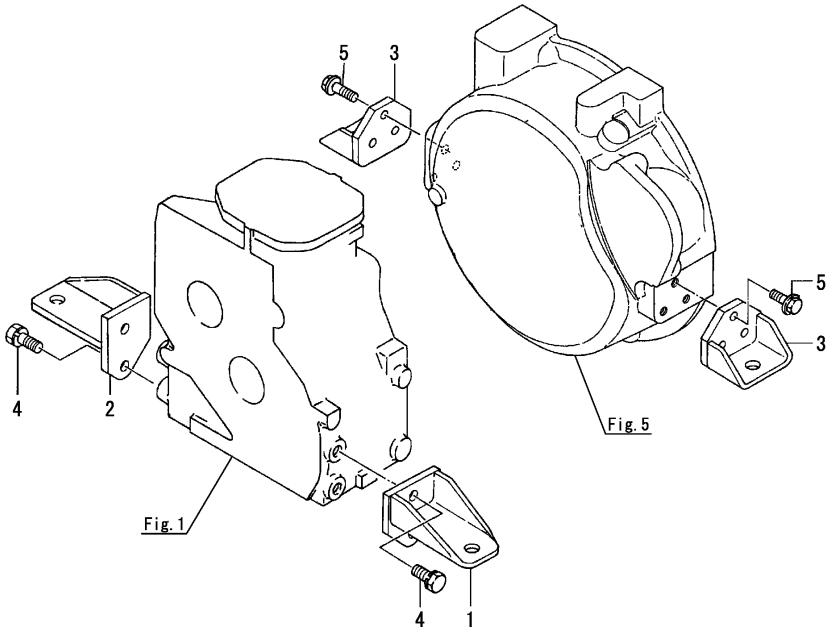

(A)=1GM10(YMI)
(B)=1GM10C
(C)=1GM10
(D)=1GM10VE
(E)=1GM10L
(F)=

No.	Lev.	Parts No.	Description	Q'ty (A)	(B)	(C)	(D)	(E)	(F)	I	R
1	1	128172-08100	FOOT					1			
1-1	1	171078-08100	FOOT, MOUNTING (E=E00345)					1		N	
2	1	128172-08110	FOOT, MOUNTING B					1			
3	1	121005-08120	FOOT, MOUNTING C					2			
4	1	26013-120282	BOLT, M12X 28					4			
5	1	26106-100252	BOLT, M10X 25 PLATED					6			

N:Old $\overset{\text{Yes}}{\underset{\text{No}}{\leftrightarrows}}$ New, Q:Old $\overset{\text{No}}{\underset{\text{Yes}}{\leftrightarrows}}$ New, R:Old $\overset{\text{Yes}}{\underset{\text{Yes}}{\leftrightarrows}}$ New, S:Old $\overset{\text{No}}{\underset{\text{No}}{\leftrightarrows}}$ New, W:Add, Z:Discontinued, F:Interchangeable by set, K:Q'ty Change

Copyright (C) YANMAR CO., LTD. All RightsReserved.

Fig.13. FLEXIBLE MOUNT

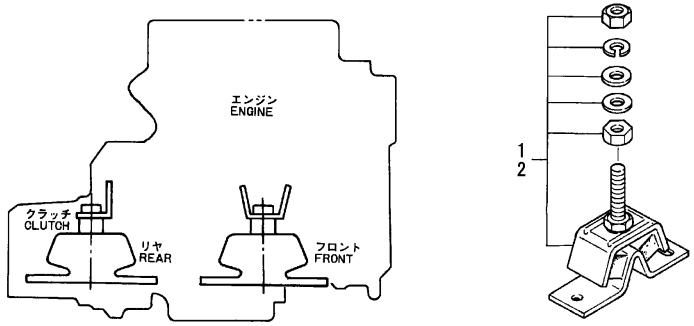

クラッチ仕様
CLUTCH SPEC

セイルドライブ仕様
SAIL DRIVE SPEC

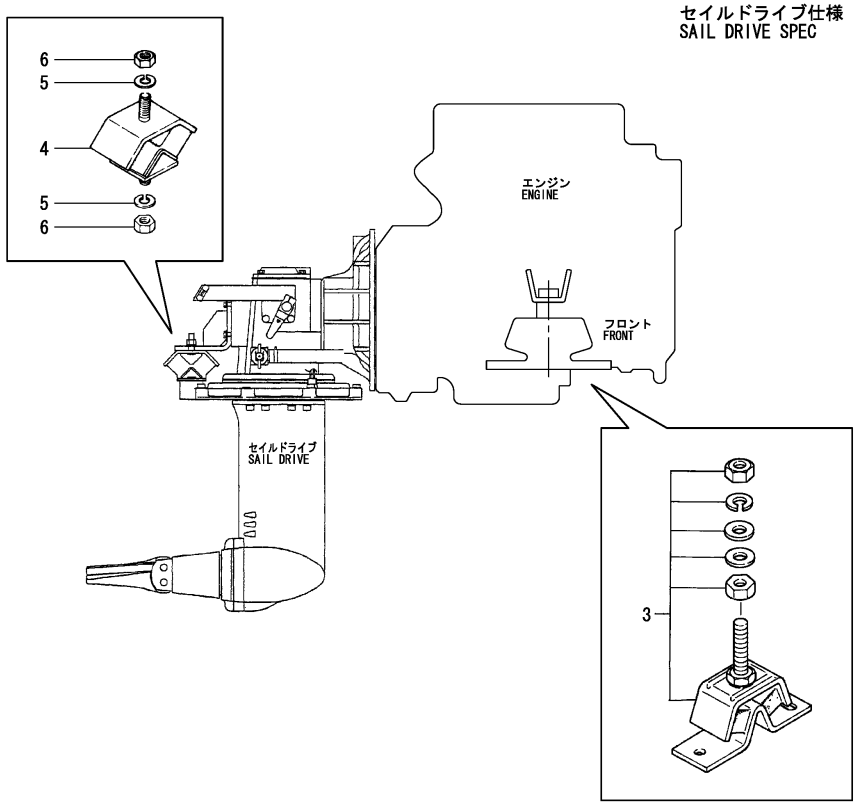

Remarks
(1)For rear side
(2)For front side

(A)=1GM10(YMI) (D)=1GM10VE
(B)=1GM10C (E)=1GM10L
(C)=1GM10 (F)=

No.	Lev.	Parts No.	Description	Q'ty (A)	(B)	(C)	(D)	(E)	(F)	I	R
1	1	128170-08340	MOUNT, FLEXIBLE D50	2		2	2				1
2	1	128170-08350	MOUNT, FLEXIBLE 70	2		2	2				2
3	1	128170-08340	MOUNT, FLEXIBLE D50			2					2
4	1	121575-08340	RUBBER, CUSHION (C=EXXXXX)			1				W	
5	1	22217-120000	WASHER, SPRING 12 (C=EXXXXX)			2				W	
6	1	26716-120002	NUT, M12 (C=EXXXXX)			2				W	

N:Old $\xleftarrow[\text{No}]{\text{Yes}}$ New, Q:Old $\xleftarrow[\text{Yes}]{\text{No}}$ New, R:Old $\xleftarrow[\text{Yes}]{\text{Yes}}$ New, S:Old $\xleftarrow[\text{No}]{\text{No}}$ New, W:Add, Z:Discontinued, F:Interchangeable by set, K:Q'ty Change

Copyright (C) YANMAR CO., LTD. All RightsReserved.

Fig.14. ANTI-CORROSIVE ZINC

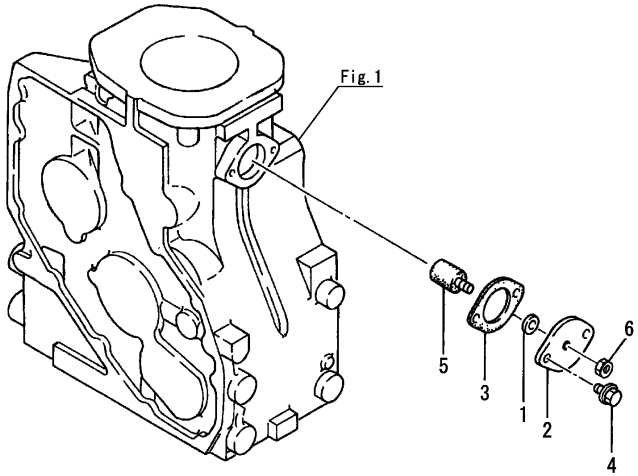

(A)=1GM10(YMI) (D)=1GM10VE
(B)=1GM10C (E)=1GM10L
(C)=1GM10 (F)=

No.	Lev.	Parts No.	Description	Q'ty (A)	(B)	(C)	(D)	(E)	(F)	I	R
1	1	123210-09310	GASKET, ZINC	1	1	1	1	1			
2	1	128170-09320	FLANGE, ZINC	1	1	1	1	1			
3	1	104211-49160	GASKET, THERMO COVER	1	1	1	1	1			
4	1	26106-060122	BOLT, M6X 12 PLATED	2	2	2	2	2			
5	1	27210-200200	ZINC, SCREW20X20	1	1	1	1	1			
6	1	26756-080002	NUT, LOCK M8	1	1	1	1	1			

N:Old $\overset{\text{Yes}}{\underset{\text{No}}{\leftrightarrow}}$ New, Q:Old $\overset{\text{No}}{\underset{\text{Yes}}{\leftrightarrow}}$ New, R:Old $\overset{\text{Yes}}{\underset{\text{Yes}}{\leftrightarrow}}$ New, S:Old $\overset{\text{No}}{\underset{\text{No}}{\leftrightarrow}}$ New, W:Add, Z:Discontinued, F:Interchangeable by set, K:Q'ty Change

Copyright (C) YANMAR CO., LTD. All RightsReserved.

Fig.15. CYLINDER HEAD

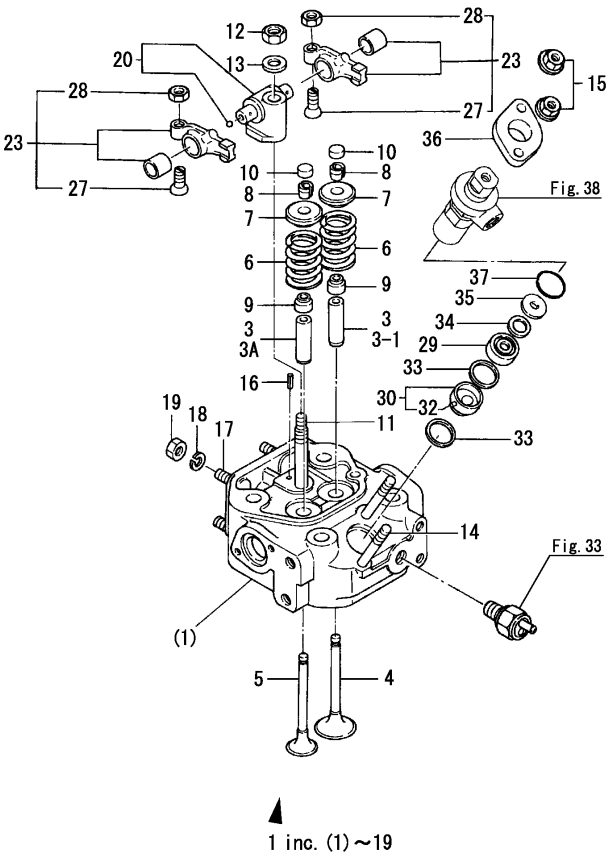

(A)=1GM10(YMI) (D)=1GM10VE
(B)=1GM10C (E)=1GM10L
(C)=1GM10 (F)=

No.	Lev.	Parts No.	Description	Q'ty (A)	(B)	(C)	(D)	(E)	(F)	I	R
1	1	728170-11700	HEAD ASSY, CYLINDER	1	1	1	1	1			
3	3	128170-11160	GUIDE, VALVE	2	2	2		2			
3-1	3	124060-11160	GUIDE, VALVE	1	1	1	1	1		K	
	(A=E09063)	(B=E00908)	(C=E00898)		(E=E00341)						
3A	3	128272-11170	GUIDE, VALVE	1	1	1	1	1		W	
	(A=E09063)	(B=E00908)	(C=E00898)		(E=E00341)						
4	2	105225-11100	VALVE, INTAKE	1	1	1	1	1			
5	2	105225-11110	VALVE, EXHAUST	1	1	1	1	1			
6	2	121575-11121	SPRING, VALVE	2	2	2	2	2			
7	2	104200-11180	RETAINER, SPRING	2	2	2	2	2			
8	2	27310-070001	COTTER, 7	2	2	2	2	2			
9	2	128170-11340	SEAL, VALVE STEM	2	2	2		2			
9-1	2	124950-11340	SEAL, VALVE STEM	2	2	2	2	2		N	
	(A=E09063)	(B=E00908)	(C=E00898)		(E=E00341)						
10	2	104211-11370	CAP, VALVE	2	2	2	2	2			
11	2	128170-11350	STUD	1	1	1	1	1			
12	2	26706-100002	NUT, M10	1	1	1		1			
12-1	2	26606-100002	NUT, M10	1	1	1	1	1		S	
	(A=E11797)	(B=E01307)	(C=E01139)		(E=E00409)						
13	2	22137-100000	WASHER, 10	1	1	1	1	1			
14	2	26216-080652	STUD, M8X 65	2	2	2	2	2			
15	2	26366-080002	NUT, M8	2	2	2	2	2			
15-1	2	26306-080002	NUT, M8	2	2	2	2	2		N	
	(A=EXXXXX)	(B=EXXXXX)	(C=EXXXXX) (D=EXXXXX)		(E=EXXXXX)						
16	2	22351-040010	PIN, SPRING 4.0X10	1	1	1	1	1			
17	2	128170-13600	STUD, M8X31	3	3	3	3	3			
18	2	22217-080000	WASHER, SPRING 8	3	3	3	3	3			
19	2	26703-080002	NUT, M8	3	3	3	3	3			
20	1	128170-11290	SUPPORT ASSY, ROCKER	1	1	1	1	1			
23	1	728170-11650	ARM ASSY, ROCKER INT	2	2	2	2	2			
27	2	101158-11230	SCREW, VALVE ADJUST	2	2	2	2	2			
28	2	26756-080002	NUT, LOCK M8	2	2	2	2	2			
29	1	128275-11410	CHAMBER, REAR	1	1	1	1	1			
30	1	105311-11420	CHAMBER, FRONT	1	1	1	1	1			
32	2	103338-11430	PIN, CHAMBER	1	1	1	1	1			
33	1	124950-11450	GASKET, CHAMBER	2	2	2	2	2			
34	1	128275-11490	INSULATOR	1	1	1	1	1			
35	1	128275-11500	COVER, PROTECTOR	1	1	1	1	1			
36	1	101147-11900	RETAINER, VALVE	1	1	1	1	1			
37	1	24341-000260	O-RING, 1AS26.0	1	1	1	1	1			

N:Old $\xleftrightarrow[\text{No}]{\text{Yes}}$ New, Q:Old $\xleftrightarrow[\text{Yes}]{\text{No}}$ New, R:Old $\xleftrightarrow[\text{Yes}]{\text{Yes}}$ New, S:Old $\xleftrightarrow[\text{No}]{\text{No}}$ New, W:Add, Z:Discontinued, F:Interchangeable by set, K:Q'ty Change

Copyright (C) YANMAR CO., LTD. All RightsReserved.

Fig.16. BONNET

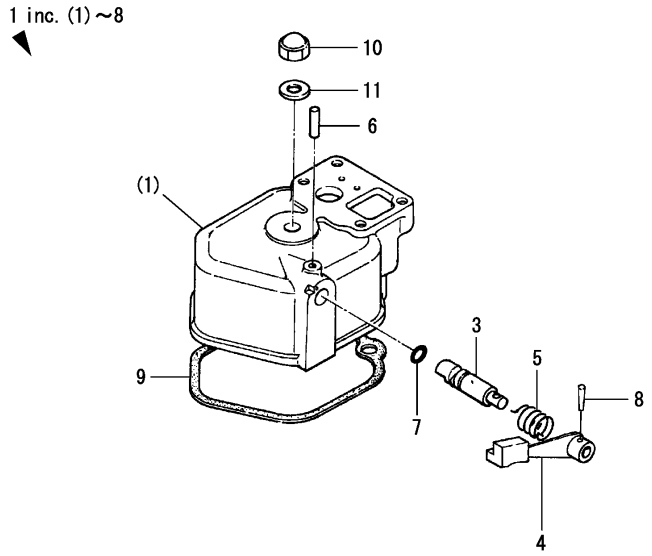

(A)=1GM10(YMI) (D)=1GM10VE
(B)=1GM10C (E)=1GM10L
(C)=1GM10 (F)=

No.	Lev.	Parts No.	Description	Q'ty (A)	(B)	(C)	(D)	(E)	(F)	I	R
1	1	128170-11860	BONNET ASSY, HEAD	1	1	1		1			
1-1	1	128176-11860	BONNET ASSY, HEAD	1	1	1	1	1		N	
	(A=E08179)	(B=E00818)	(C=E00749)	(E=E00326)							
3	2	104200-03600	SHAFT, DECOMPRESSION	1	1	1	1	1			
4	2	104104-03750	LEVER, DECOMPRESSION	1	1	1		1			
4-1	2	128176-03750	LEVER, DECOMPRESSION	1	1	1	1	1		N	
	(A=E08179)	(B=E00818)	(C=E00749)	(E=E00326)							
5	2	104200-03641	SPRING,DECOMPRESSION	1	1	1	1	1			
6	2	22312-030180	PIN, PARALLEL M3X18	1	1	1	1	1			
7	2	24311-000070	O-RING, 1AP7.0	1	1	1	1	1			
8	2	22322-030160	PIN, TAPER 3X16	1	1	1	1	1			
9	1	128170-11310	GASKET, BONNET	1	1	1	1	1			
10	1	26656-080002	NUT, CAP M8	1	1	1		1			
10-1	1	26657-080002	NUT, CAP M8	1	1	1	1	1		N	
	(A=E11891)	(B=E01313)	(C=E01139)	(E=E00410)							
11	1	43400-500410	SEAL WASHER 8S	1	1	1		1			
11-1	1	22190-080002	WASHER, SEAL 8	1	1	1	1	1		N	
	(A=E12740)	(B=E01385)	(C=E01195)	(E=E00731)							

N:Old $\xleftarrow[\text{No}]{\text{Yes}}$ New, Q:Old $\xleftarrow[\text{Yes}]{\text{No}}$ New, R:Old $\xleftarrow[\text{Yes}]{\text{Yes}}$ New, S:Old $\xleftarrow[\text{No}]{\text{No}}$ New, W:Add, Z:Discontinued, F:Interchangeable by set, K:Q'ty Change

Copyright (C) YANMAR CO., LTD. All RightsReserved.

Fig.17. AIR INTAKE SILENCER

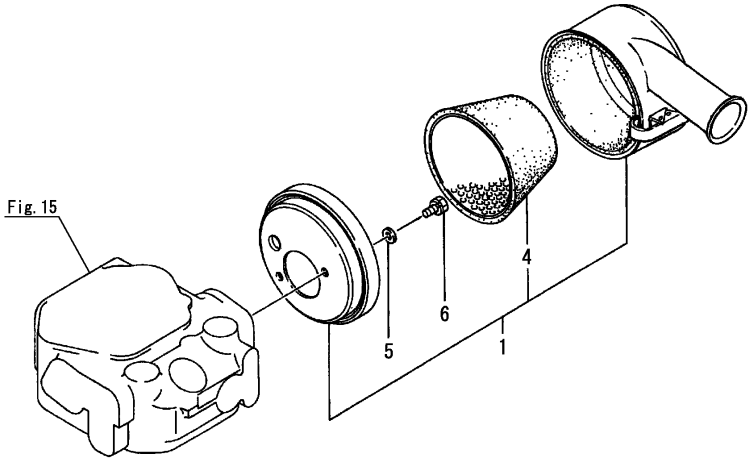

(A)=1GM10(YMI)
(B)=1GM10C
(C)=1GM10
(D)=1GM10VE
(E)=1GM10L
(F)=

No.	Lev.	Parts No.	Description	Q'ty (A)	(B)	(C)	(D)	(E)	(F)	I	R
1	1	128171-12500	SILENCER ASSY,INTAKE	1	1	1	1	1			
4	2	128171-12540	ELEMENT, AIR CLEANER	1	1	1	1	1			
5	1	22117-060000	WASHER, 6	2	2	2	2	2			
6	1	26013-060102	BOLT, M6X 10	2	2	2	2	2			

N:Old $\frac{\text{Yes}}{\text{No}}$ New, Q:Old $\frac{\text{No}}{\text{Yes}}$ New, R:Old $\frac{\text{Yes}}{\text{Yes}}$ New, S:Old $\frac{\text{No}}{\text{No}}$ New, W:Add, Z:Discontinued, F:Interchangeable by set, K:Q'ty Change

Copyright (C) YANMAR CO., LTD. All RightsReserved.

Fig.18. MIXING ELBOW

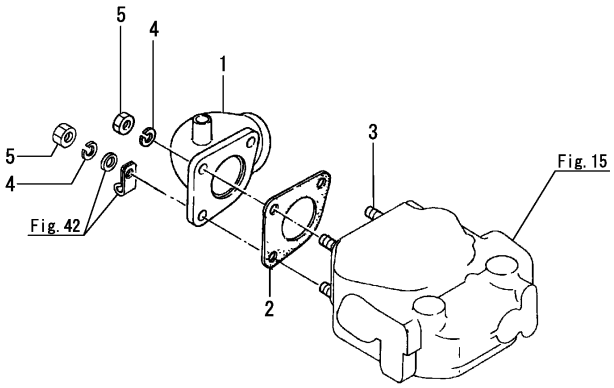

(A)=1GM10(YMI) (D)=1GM10VE
(B)=1GM10C (E)=1GM10L
(C)=1GM10 (F)=

No.	Lev.	Parts No.	Description	Q'ty (A)	(B)	(C)	(D)	(E)	(F)	I	R
1	1	128170-13530	ELBOW, MIXING	1	1	1	1	1			
2	1	128170-13200	GASKET	1	1	1		1			
2-1	1	128170-13201	GASKET, EXHAUST	1	1	1	1	1		N	
	(A=E10132)	(B=E01035)	(C=E01032)	(E=E00349)							
3	1	26213-080182	STUD, M8X 18	3	3	3		3			
3-1	1	128170-13600	STUD, M8X31	3	3	3	3	3		N	
	(A=EXXXXX)	(B=EXXXXX)	(C=EXXXXX)	(E=EXXXXX)							
4	1	22217-080000	WASHER, SPRING 8	3	3	3	3	3			
5	1	26703-080002	NUT, M8	3	3	3	3	3			

N:Old $\frac{\text{Yes}}{\text{No}}$ New, Q:Old $\frac{\text{No}}{\text{Yes}}$ New, R:Old $\frac{\text{Yes}}{\text{Yes}}$ New, S:Old $\frac{\text{No}}{\text{No}}$ New, W:Add, Z:Discontinued, F:Interchangeable by set, K:Q'ty Change

Copyright (C) YANMAR CO., LTD. All RightsReserved.

Fig.19. CAMSHAFT

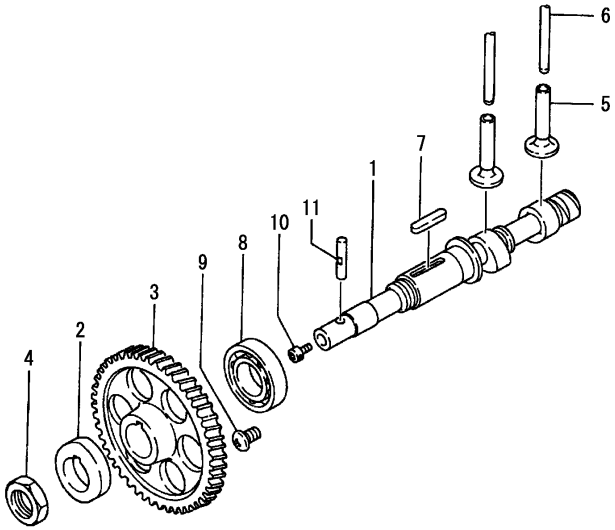

(A)=1GM10(YMI) (D)=1GM10VE
(B)=1GM10C (E)=1GM10L
(C)=1GM10 (F)=

No.	Lev.	Parts No.	Description	Q'ty (A)	(B)	(C)	(D)	(E)	(F)	I	R
1	1	128170-14010	CAMSHAFT	1	1	1					
1-1	1	128170-14011	CAMSHAFT	1	1	1	1			N	
	(A=E08179)	(B=E00818)	(C=E00749)								
2	1	124060-14090	CAM, FUEL	1	1	1	1				
3	1	128170-14100	GEAR, CAMSHAFT	1	1	1	1				
4	1	128170-14150	NUT, CAM	1	1	1	1				
5	1	105430-14200	TAPPET	2	2	2	2				
6	1	105225-14400	ROD, PUSH	2	2	2	2				
7	1	22512-050340	KEY, 5X 34	1	1	1	1				
8	1	24101-060054	BEARING, BALL 6005	1	1	1	1				
9	1	26587-080122	SCREW, M8X12	1	1	1	1				
10	1	26450-050102	BOLT, M5X 10	1	1	1	1				
11	1	124070-14760	PIN	1	1	1	1				

N:Old $\frac{\text{Yes}}{\text{No}}$ New, Q:Old $\frac{\text{No}}{\text{Yes}}$ New, R:Old $\frac{\text{Yes}}{\text{Yes}}$ New, S:Old $\frac{\text{No}}{\text{No}}$ New, W:Add, Z:Discontinued, F:Interchangeable by set, K:Q'ty Change

Copyright (C) YANMAR CO., LTD. All RightsReserved.

Fig.20. CAMSHAFT

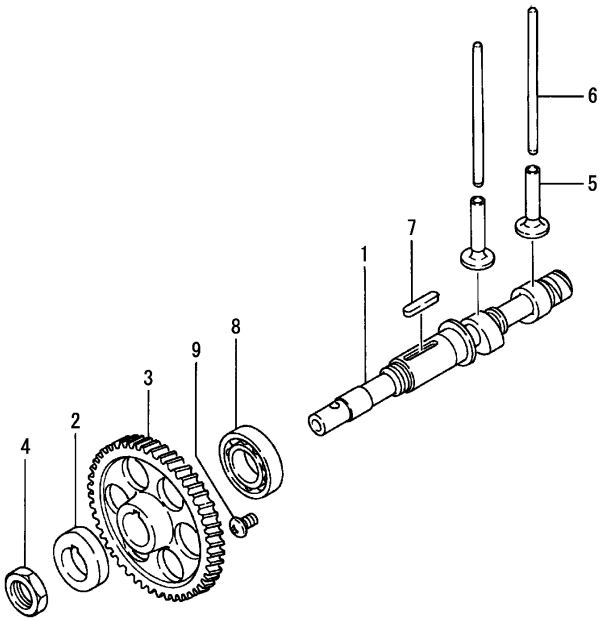

(A)=1GM10(YMI)
(B)=1GM10C
(C)=1GM10
(D)=1GM10VE
(E)=1GM10L
(F)=

No.	Lev.	Parts No.	Description	Q'ty (A)	(B)	(C)	(D)	(E)	(F)	I	R
1	1	128170-14010	CAMSHAFT					1			
1-1	1	128170-14011	CAMSHAFT (E=E00326)					1		N	
2	1	124060-14090	CAM, FUEL					1			
3	1	128170-14100	GEAR, CAMSHAFT					1			
4	1	128170-14150	NUT, CAM					1			
5	1	105430-14200	TAPPET					2			
6	1	105225-14400	ROD, PUSH					2			
7	1	22512-050340	KEY, 5X 34					1			
8	1	24101-060054	BEARING, BALL 6005					1			
9	1	26587-080122	SCREW, M8X12					1			

N:Old $\frac{\text{Yes}}{\text{No}}$ New, Q:Old $\frac{\text{No}}{\text{Yes}}$ New, R:Old $\frac{\text{Yes}}{\text{Yes}}$ New, S:Old $\frac{\text{No}}{\text{No}}$ New, W:Add, Z:Discontinued, F:Interchangeable by set, K:Q'ty Change

Copyright (C) YANMAR CO., LTD. All RightsReserved.

Fig.21. CRANKSHAFT & FLYWHEEL

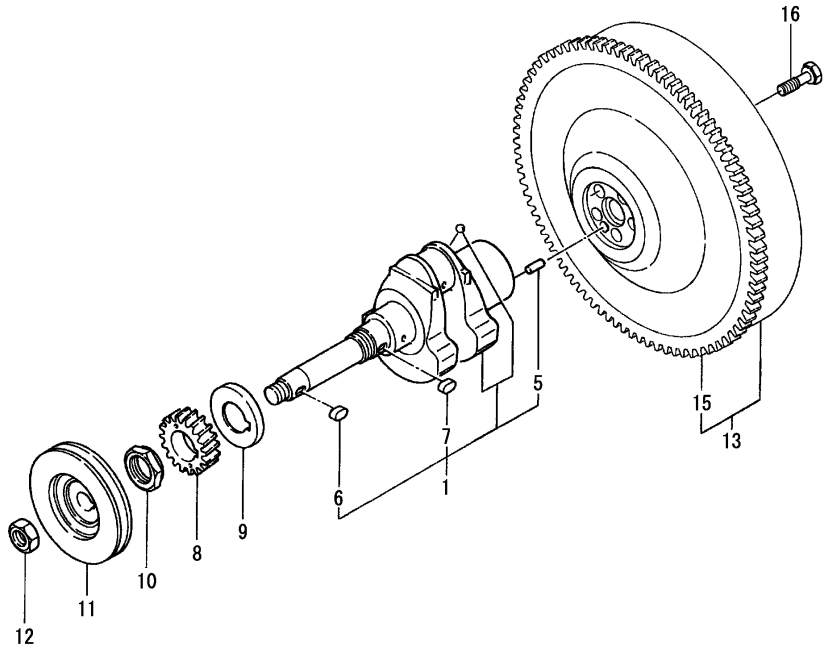

(A)=1GM10(YMI) (D)=1GM10VE
(B)=1GM10C (E)=1GM10L
(C)=1GM10 (F)=

No.	Lev.	Parts No.	Description	Q'ty (A)	(B)	(C)	(D)	(E)	(F)	I	R
1	1	728171-21700	CRANKSHAFT ASSY	1	1	1	1				
5	2	22312-080160	PIN, PARALLEL M8X16	1	1	1	1				
5-1	2	129100-01580	PIN, PARALLEL 8X16	1	1	1	1			R	
	(A=EXXXXX)	(B=EXXXXX)	(C=EXXXXX) (D=EXXXXX)								
6	2	22512-070120	KEY, 7X 12	1	1	1	1				
7	2	22512-070120	KEY, 7X 12	1	1	1	1				
8	1	128170-21200	GEAR, CRANKSHAFT Z26	1	1	1	1				
9	1	128170-21250	WASHER, THRUST	1	1	1	1				
10	1	121450-21540	NUT, CRANKSHAFT GEAR	1	1	1	1				
11	1	128170-21650	V-PULLEY, CRANKSHAFT	1	1	1	1				
12	1	26776-180002	NUT, LOCK M18	1	1	1	1				
13	1	128171-21590	FLYWHEEL ASSY	1	1	1	1				
15	2	124950-21600	GEAR, RING Z=97	1	1	1	1				
16	1	121574-21500	BOLT, FLYWHEEL L=45	5	5	5	5				

N:Old $\overset{\text{Yes}}{\underset{\text{No}}{\leftrightarrows}}$ New, Q:Old $\overset{\text{No}}{\underset{\text{Yes}}{\leftrightarrows}}$ New, R:Old $\overset{\text{Yes}}{\underset{\text{Yes}}{\leftrightarrows}}$ New, S:Old $\overset{\text{No}}{\underset{\text{No}}{\leftrightarrows}}$ New, W:Add, Z:Discontinued, F:Interchangeable by set, K:Q'ty Change

Copyright (C) YANMAR CO., LTD. All RightsReserved.

Fig.22. CRANKSHAFT & FLYWHEEL

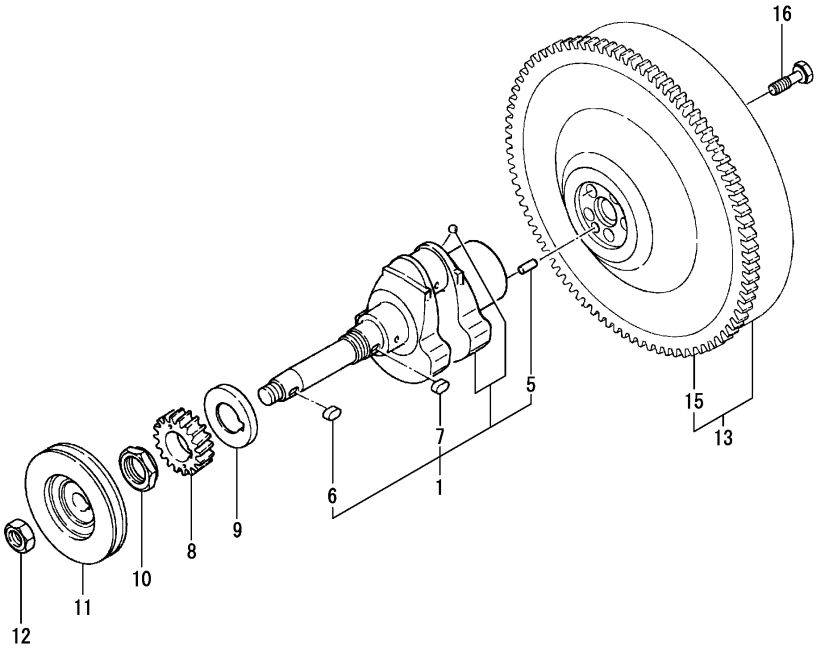

(A)=1GM10(YMI) (D)=1GM10VE
(B)=1GM10C (E)=1GM10L
(C)=1GM10 (F)=

No.	Lev.	Parts No.	Description	Q'ty (A)	(B)	(C)	(D)	(E)	(F)	I	R
1	1	728171-21700	CRANKSHAFT ASSY					1			
5	2	22312-080160	PIN, PARALLEL M8X16					1			
6	2	22512-070120	KEY, 7X 12					1			
7	2	22512-070120	KEY, 7X 12					1			
8	1	128170-21200	GEAR, CRANKSHAFT Z26					1			
9	1	128170-21250	WASHER, THRUST					1			
10	1	121450-21540	NUT, CRANKSHAFT GEAR					1			
11	1	128170-21650	V-PULLEY, CRANKSHAFT					1			
12	1	26776-180002	NUT, LOCK M18					1			
13	1	128172-21590	FLYWHEEL ASSY					1			
13-1	1	128172-21591	FLYWHEEL ASSY					1		N	
				(E=E00155)							
15	2	129350-21600	GEAR, RING Z=114					1			
16	1	121111-21501	BOLT, FLYWHEEL					5			

N:Old $\frac{\text{Yes}}{\text{No}}$ New, Q:Old $\frac{\text{No}}{\text{Yes}}$ New, R:Old $\frac{\text{Yes}}{\text{Yes}}$ New, S:Old $\frac{\text{No}}{\text{No}}$ New, W:Add, Z:Discontinued, F:Interchangeable by set, K:Q'ty Change

Copyright (C) YANMAR CO., LTD. All RightsReserved.

Fig.23. PISTON

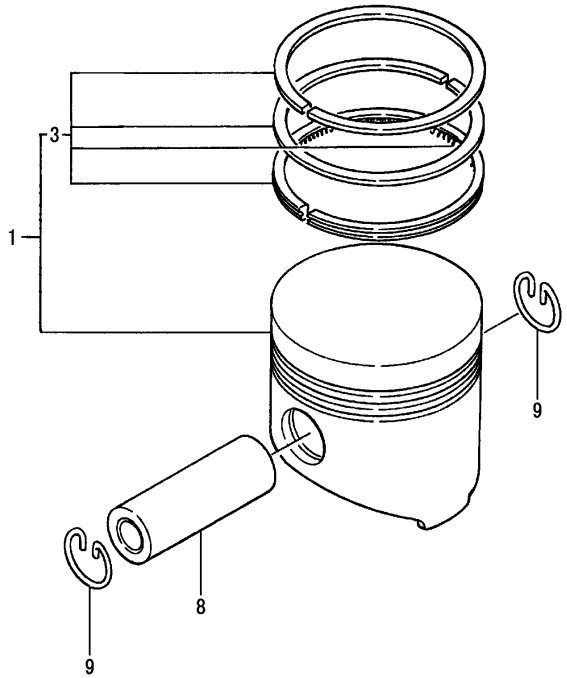

(A)=1GM10(YMI)
(B)=1GM10C
(C)=1GM10
(D)=1GM10VE
(E)=1GM10L
(F)=

No.	Lev.	Parts No.	Description	Q'ty (A)	(B)	(C)	(D)	(E)	(F)	I	R
1	1	105311-22090	PISTON ASSY	1	1	1	1	1			
3	2	705311-22500	RING SET, PISTON	1	1	1	1	1			
8	1	105225-22300	PIN, PISTON	1	1	1	1	1			
9	1	105225-22400	CIRCLIP, PISTON PIN	2	2	2	2	2			

N:Old $\xleftrightarrow[\text{No}]{\text{Yes}}$ New, Q:Old $\xleftrightarrow[\text{Yes}]{\text{No}}$ New, R:Old $\xleftrightarrow[\text{Yes}]{\text{Yes}}$ New, S:Old $\xleftrightarrow[\text{No}]{\text{No}}$ New, W:Add, Z:Discontinued, F:Interchangeable by set, K:Q'ty Change

Copyright (C) YANMAR CO., LTD. All RightsReserved.

Fig.24. CONNECTING ROD

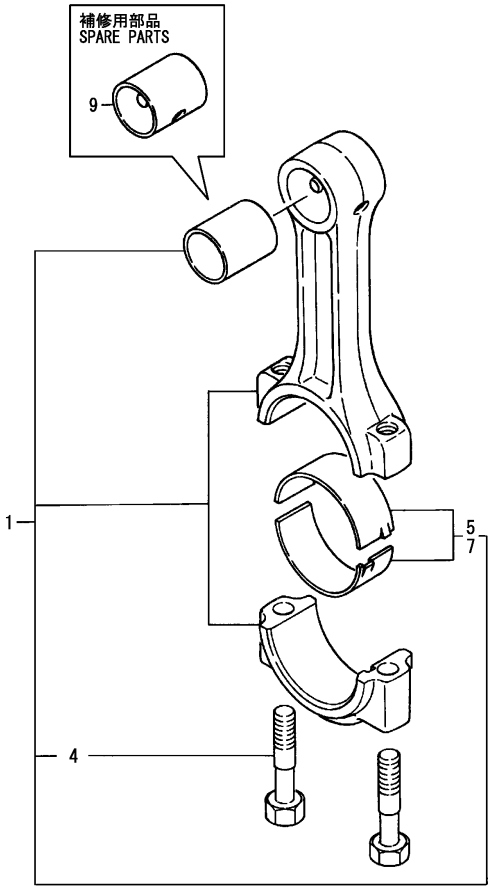

(A)=1GM10(YMI) (D)=1GM10VE
(B)=1GM10C (E)=1GM10L
(C)=1GM10 (F)=

No.	Lev.	Parts No.	Description	Q'ty (A)	(B)	(C)	(D)	(E)	(F)	I	R
1	1	728171-23100	ROD ASSY, CONNECTING	1	1	1	1	1			
4	3	105225-23200	BOLT, CONNECTING ROD	2	2	2	2	2			
4-1	3	119717-23200	BOLT, CONNECTING ROD	2	2	2	2	2		R	
	(A=E24751)	(B=E04353)	(C=E02128) (D=EXXXXX)	(E=EXXXXX)							
5	2	705311-23600	METAL ASSY,CRANK PIN	1	1	1	1	1			
7	1	105225-23380	METAL ASSY, PIN .25	1	1	1	1	1			1
9	1	105225-23180	BEARING, PISTON PIN	1	1	1	1	1			2

Remarks
(1)Under sized(U.S.=0.25)parts.
(2)Spare parts.

N:Old $\xleftrightarrow[\text{No}]{\text{Yes}}$ New, Q:Old $\xleftrightarrow[\text{Yes}]{\text{No}}$ New, R:Old $\xleftrightarrow[\text{Yes}]{\text{Yes}}$ New, S:Old $\xleftrightarrow[\text{No}]{\text{No}}$ New, W:Add, Z:Discontinued, F:Interchangeable by set, K:Q'ty Change

Copyright (C) YANMAR CO., LTD. All RightsReserved.

Fig.25. LUB.OIL PUMP

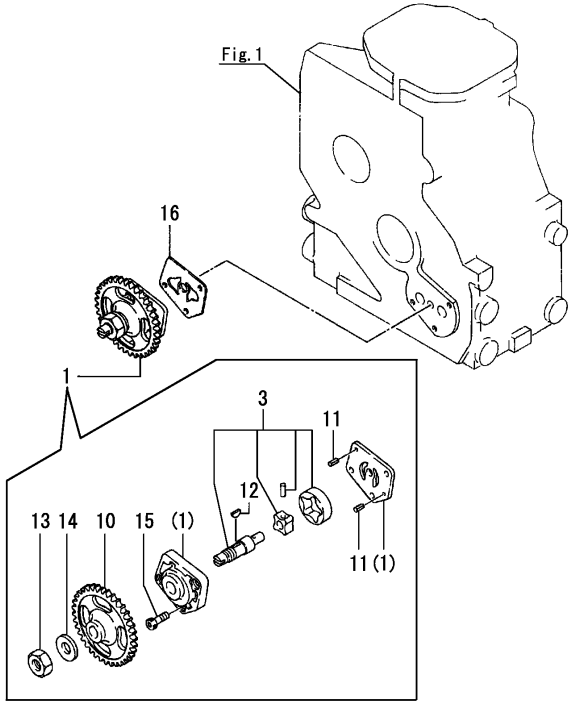

(A)=1GM10(YMI) (D)=1GM10VE
(B)=1GM10C (E)=1GM10L
(C)=1GM10 (F)=

No.	Lev.	Parts No.	Description	Q'ty (A)	(B)	(C)	(D)	(E)	(F)	I	R
1	1	728170-32100	PUMP ASSY, OIL	1	1	1	1	1			
3	2	728170-32500	ROTOR ASSY, OIL PUMP	1	1	1	1	1			
10	2	128170-32200	GEAR, PUMP	1	1	1	1	1			
11	2	22351-040008	PIN, SPRING 4.0X 8	2	2	2	2	2			
12	2	22522-030100	KEY, WOODRUFF 3X10	1	1	1	1	1			
13	2	26776-120002	NUT, LOCK M12	1	1	1	1	1			
14	2	22117-120000	WASHER, 12	1	1	1	1	1			
15	2	26450-060182	BOLT, M6X 18	3	3	3	3	3			
16	1	128170-32030	GASKET, PUMP COVER	1	1	1	1	1			

N:Old $\xleftrightarrow[\text{No}]{\text{Yes}}$ New, Q:Old $\xleftrightarrow[\text{Yes}]{\text{No}}$ New, R:Old $\xleftrightarrow[\text{Yes}]{\text{Yes}}$ New, S:Old $\xleftrightarrow[\text{No}]{\text{No}}$ New, W:Add, Z:Discontinued, F:Interchangeable by set, K:Q'ty Change

Copyright (C) YANMAR CO., LTD. All RightsReserved.

Fig.26. LUB.OIL DIPSTICK

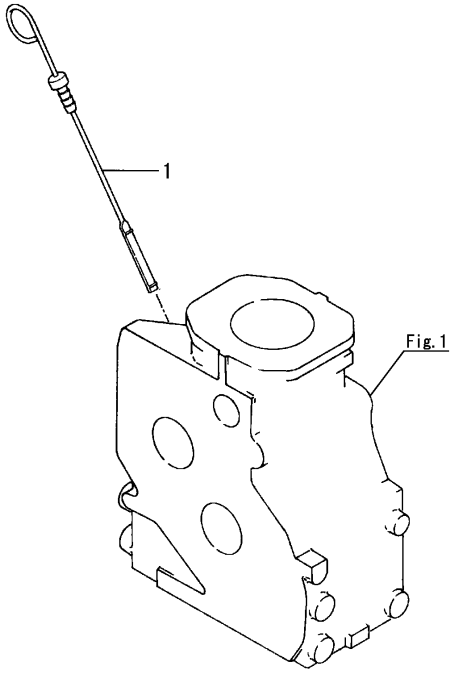

(A)=1GM10(YMI) (D)=1GM10VE
(B)=1GM10C (E)=1GM10L
(C)=1GM10 (F)=

No.	Lev.	Parts No.	Description	Q'ty (A)	(B)	(C)	(D)	(E)	(F)	I	R
1	1	128170-34800	DIPSTICK, OIL	1	1	1	1	1			
1-1	1	128176-34800	DIPSTICK, OIL	1	1	1	1	1		R	
	(A=EXXXXX)	(B=EXXXXX)	(C=EXXXXX) (D=EXXXXX) (E=EXXXXX)								

N:Old $\xleftrightarrow[\text{No}]{\text{Yes}}$ New, Q:Old $\xleftrightarrow[\text{Yes}]{\text{No}}$ New, R:Old $\xleftrightarrow[\text{Yes}]{\text{Yes}}$ New, S:Old $\xleftrightarrow[\text{No}]{\text{No}}$ New, W:Add, Z:Discontinued, F:Interchangeable by set, K:Q'ty Change

Copyright (C) YANMAR CO., LTD. All RightsReserved.

Fig.27. LUB.OIL STRAINER

(A)=1GM10(YMI) (D)=1GM10VE
(B)=1GM10C (E)=1GM10L
(C)=1GM10 (F)=

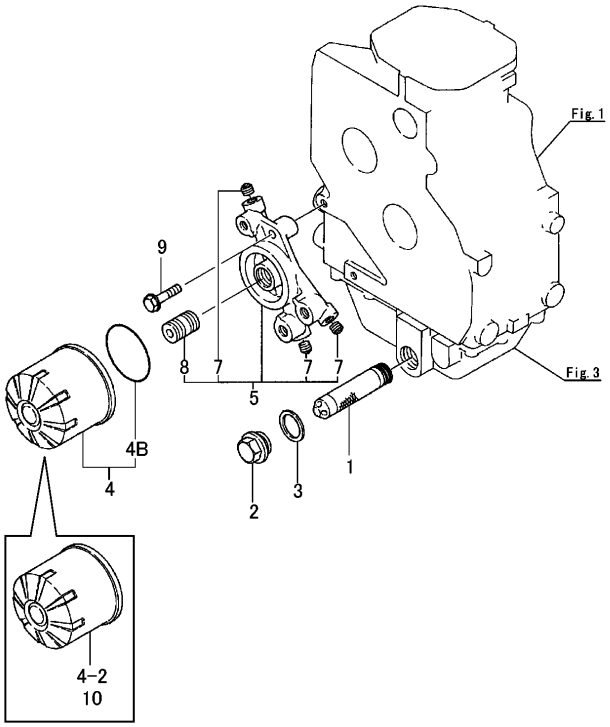

No.	Lev.	Parts No.	Description	Q'ty (A)	(B)	(C)	(D)	(E)	(F)	I	R
1	1	105430-35010	SCREEN, OIL STRAINER	1	1	1	1	1			
2	1	105430-01690	PLUG, DRAIN	1	1	1	1	1			
3	1	43400-500570	WASHER, SEAL 24	1	1	1		1			
3-1	1	22190-240002	WASHER, SEAL 24	1	1	1	1	1		N	
	(A=E12740)	(B=E01385)	(C=E01195)	(E=E00731)							
4	1	124450-35100	FILTER, OIL	1	1	1		1			
4-1	1	119660-35150	FILTER ASSY, D80XL75	1	1	1	1	1		N	
	(A=E10132)	(B=E01035)	(C=E01032)	(E=E00349)							
4-2	1	119305-35151	FILTER ASSY, D68XL65	1	1	1	1	1		R	1
	(A=EXXXXX)	(B=EXXXXX)	(C=EXXXXX) (D=EXXXXX)	(E=EXXXXX)							
4B	2	124450-35110	O-RING, OIL FILTER	1	1	1	1	1		Z	
	(A=EXXXXX)	(B=EXXXXX)	(C=EXXXXX) (D=EXXXXX)	(E=EXXXXX)							
5	1	728170-35800	BRACKET ASSY, FILTER	1	1	1	1	1			
7	2	124060-01050	PLUG, PT1/8	3	3	3	3	3			
7-1	2	23876-010000	PLUG, R01	3	3	3	3	3		R	
	(A=EXXXXX)	(B=EXXXXX)	(C=EXXXXX) (D=EXXXXX)	(E=EXXXXX)							
8	2	105225-35290	STUD, OIL FILTER	1	1	1	1	1			
9	1	26106-080352	BOLT, M8X 35 PLATED	2	2	2	2	2			
10	1	119305-35170	FILTER ASSY, D68XL65	1	1	1	1	1			2

Remarks
(1)Non-branded filter(without Yanmar logo).
(2)Branded filter(with Yanmar logo).
It is interchangeable with non-branded filter.(Interchangeability : R)

N:Old $\overset{\text{Yes}}{\underset{\text{No}}{\leftrightarrow}}$ New, Q:Old $\overset{\text{No}}{\underset{\text{Yes}}{\leftrightarrow}}$ New, R:Old $\overset{\text{Yes}}{\underset{\text{Yes}}{\leftrightarrow}}$ New, S:Old $\overset{\text{No}}{\underset{\text{No}}{\leftrightarrow}}$ New, W:Add, Z:Discontinued, F:Interchangeable by set, K:Q'ty Change

Copyright (C) YANMAR CO., LTD. All RightsReserved.

Fig.28. L.O.PRESS.REGULATING VALVE

(A)=1GM10(YMI)
(B)=1GM10C
(C)=1GM10
(D)=1GM10VE
(E)=1GM10L
(F)=

No.	Lev.	Parts No.	Description	Q'ty (A)	(B)	(C)	(D)	(E)	(F)	I	R
1	1	105225-35300	VALVE ASSY, CONTROL	1	1	1	1	1			

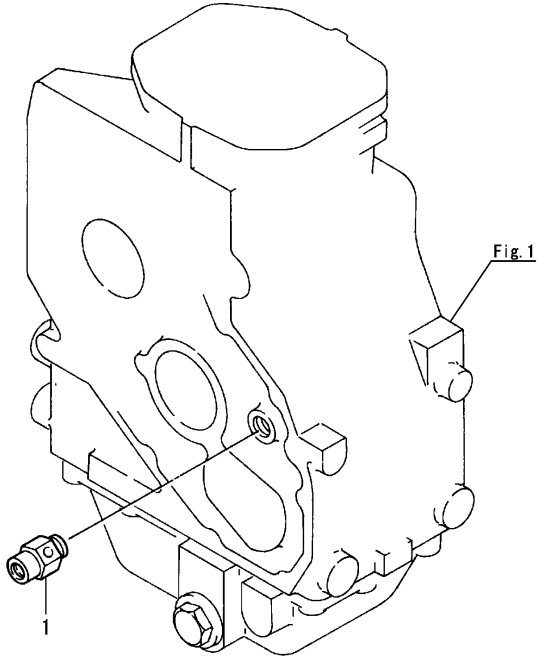

N:Old $\xleftarrow[\text{No}]{\text{Yes}}$ New, Q:Old $\xleftarrow[\text{Yes}]{\text{No}}$ New, R:Old $\xleftarrow[\text{Yes}]{\text{Yes}}$ New, S:Old $\xleftarrow[\text{No}]{\text{No}}$ New, W:Add, Z:Discontinued, F:Interchangeable by set, K:Q'ty Change

Copyright (C) YANMAR CO., LTD. All RightsReserved.

Fig.29. LUB.OIL PIPE

(A)=1GM10(YMI) (D)=1GM10VE
(B)=1GM10C (E)=1GM10L
(C)=1GM10 (F)=

No.	Lev.	Parts No.	Description	Q'ty (A)	(B)	(C)	(D)	(E)	(F)	I	R
1	1	128170-39010	PIPE ASSY, LUB. OIL	1	1	1	1	1			
3	2	103854-39540	JOINT, PIPE 12	2	2	2	2	2			
4	1	23414-120000	GASKET, 12X1.0	4	4	4	4	4			
5	1	103854-39140	BOLT, PIPE JOINT	2	2	2	2	2			
6	1	128170-39020	PIPE ASSY, OIL C	1	1	1	1	1			
8	2	103854-39540	JOINT, PIPE 12	2	2	2	2	2			
9	1	23414-120000	GASKET, 12X1.0	4	4	4	4	4			
10	1	103854-39140	BOLT, PIPE JOINT	2	2	2	2	2			
11	1	128170-39200	PIPE, OIL	1	1	1	1	1			
13	2	103288-39170	JOINT, PIPE	2	2	2	2	2			
14	1	23414-080000	GASKET, 8X1.0	4	4	4	4	4			
15	1	101147-59810	BOLT, PIPE JOINT M8	2	2	2	2	2			
16	1	105582-39140	RETAINER, PIPE A	1	1	1	1	1			
17	1	124060-39451	SWITCH, 0.2KG	1	1	1	1	1			
17-1	1	124060-39452	SWITCH, HYDRAULIC	1	1	1	1	1		N	

(A=EXXXXX) (B=EXXXXX) (C=EXXXXX) (D=EXXXXX) (E=EXXXXX)

N:Old $\frac{\text{Yes}}{\text{No}}$ New, Q:Old $\frac{\text{No}}{\text{Yes}}$ New, R:Old $\frac{\text{Yes}}{\text{Yes}}$ New, S:Old $\frac{\text{No}}{\text{No}}$ New, W:Add, Z:Discontinued, F:Interchangeable by set, K:Q'ty Change

Copyright (C) YANMAR CO., LTD. All RightsReserved.

Fig.30. COOLING PUMP(SEA WATER)

(A)=1GM10(YMI) (D)=1GM10VE
(B)=1GM10C (E)=1GM10L
(C)=1GM10 (F)=

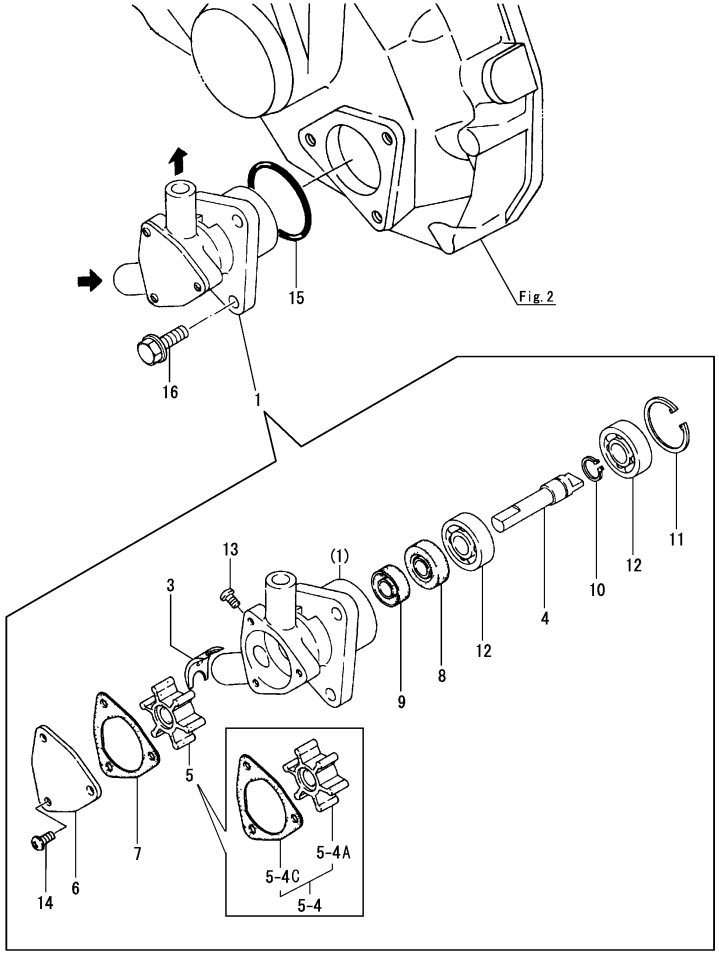

No.	Lev.	Parts No.	Description	Q'ty (A)	(B)	(C)	(D)	(E)	(F)	I	R
1	1	128170-42000	PUMP ASSY, WATER	1	1	1		1			
1-1	1	128170-42200	PUMP ASSY, WATER	1	1	1	1	1		N	
	(A=E12740)	(B=E01385)	(C=E01195)	(E=E00731)							
3	2	128170-42050	CAM, PUMP	1	1	1		1			1
4	2	128170-42060	SHAFT, WATER PUMP	1	1	1	1	1			
5	2	128170-42070	IMPELLER	1	1	1	1	1			
5-1	2	128176-42070	IMPELLER	1	1	1	1	1		R	
	(A=*1995.07.)	(B=*1995.07.)	(C=*1995.07.) (D=*1995.07.)	(E=*1995.07.)							
5-2	2	128176-42071	IMPELLER, PUMP	1	1	1	1	1		N	
	(A=*1997.09.)	(B=*1997.09.)	(C=*1997.09.) (D=*1997.09.)	(E=*1997.09.)							
5-3	2	128176-42080	IMPELLER KIT	1	1	1	1	1		N	
	(A=*2016.12.)	(B=*2016.12.)	(C=*2016.12.) (D=*2016.12.)	(E=*2016.12.)							
5-4	2	128176-42090	IMPELLER KIT	1	1	1	1	1		N	
	(A=*2018.09.)	(B=*2018.09.)	(C=*2018.09.) (D=*2018.09.)	(E=*2018.09.)							
5-4A	3	128176-42080	IMPELLER KIT	1	1	1	1	1		W	
	(A=*2018.09.)	(B=*2018.09.)	(C=*2018.09.) (D=*2018.09.)	(E=*2018.09.)							
5-4C	3	128170-42090	GASKET, END COVER	1	1	1	1	1		W	
	(A=*2018.09.)	(B=*2018.09.)	(C=*2018.09.) (D=*2018.09.)	(E=*2018.09.)							
6	2	128170-42080	COVER, WATER PUMP	1	1	1	1	1			
7	2	128170-42090	GASKET, END COVER	1	1	1	1	1		Z	
8	2	128170-42110	SEAL, OIL TC8227	1	1	1	1	1			
9	2	124240-91450	SEAL, OIL	1	1	1		1			
9-1	2	128170-42120	SEAL, OIL TC8187	1	1	1	1	1		N	
	(A=E06896)	(B=E00700)	(C=E00697)	(E=E00293)							
10	2	22242-000100	RING, 10	1	1	1	1	1			
11	2	22252-000260	RING, 26	1	1	1	1	1			
12	2	24101-060004	BEARING, BALL 6000	2	2	2	2	2			
13	2	26554-040062	SCREW, M4X 6	1	1	1		1			1
14	2	26554-040082	SCREW, M4X 8	3	3	3		3			
14-1	2	26113-040082	BOLT, M4X 8	3	3	3	3	3		N	
	(A=E12740)	(B=E01385)	(C=E01195)	(E=E00731)							
15	1	24321-000350	O-RING, 1AG35.0	1	1	1	1	1			
16	1	26106-060182	BOLT, M6X 18 PLATED	3	3	3	3	3			

Remarks
(1)For No.1(Not used for No.1-1)

N:Old $\xleftarrow[\text{No}]{\text{Yes}}$ New, Q:Old $\xleftarrow[\text{Yes}]{\text{No}}$ New, R:Old $\xleftarrow[\text{Yes}]{\text{Yes}}$ New, S:Old $\xleftarrow[\text{No}]{\text{No}}$ New, W:Add, Z:Discontinued, F:Interchangeable by set, K:Q'ty Change

Copyright (C) YANMAR CO., LTD. All RightsReserved.

Fig.31. KINGSTON COCK(OPTIONAL)

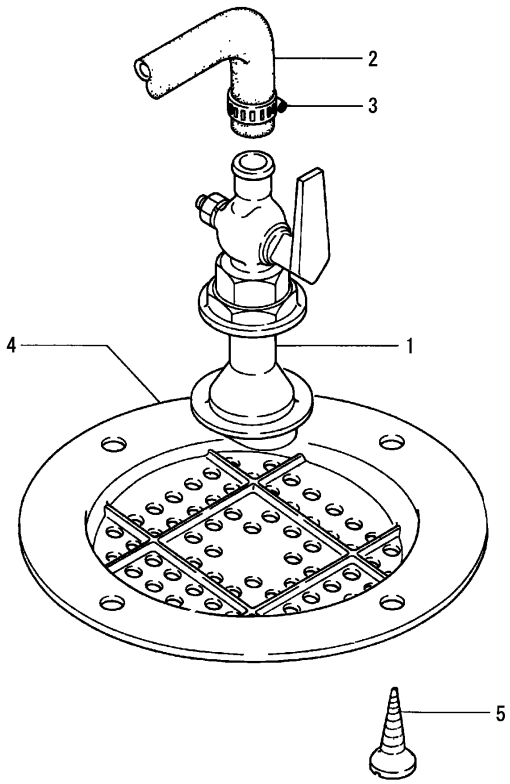

(A)=1GM10(YMI) (D)=1GM10VE
(B)=1GM10C (E)=1GM10L
(C)=1GM10 (F)=

No.	Lev.	Parts No.	Description	Q'ty (A)	(B)	(C)	(D)	(E)	(F)	I	R
1	1	43662-010030	COCK ASSY, KINGSTON	1		1	1	1			
1-1	1	43662-010031	COCK, KINGSTON 10A	1		1	1	1			R
	(A=E23998)		(C=EXXXXX) (D=EXXXXX)	(E=EXXXXX)							
2	1	104211-49080	PIPE, 13/20X2M	1		1	1	1			
3	1	23000-022000	CLAMP, 22	2		2	2	2			
4	1	43666-020951	COVER, STRAINER	1		1	1	1			
5	1	22724-800380	SCREW, 8.0X38	4		4	4	4			

N:Old $\overset{\text{Yes}}{\underset{\text{No}}{\leftrightarrows}}$ New, Q:Old $\overset{\text{No}}{\underset{\text{Yes}}{\leftrightarrows}}$ New, R:Old $\overset{\text{Yes}}{\underset{\text{Yes}}{\leftrightarrows}}$ New, S:Old $\overset{\text{No}}{\underset{\text{No}}{\leftrightarrows}}$ New, W:Add, Z:Discontinued, F:Interchangeable by set, K:Q'ty Change

Copyright (C) YANMAR CO., LTD. All RightsReserved.

Fig.32. COOLING SEA WATER PIPE

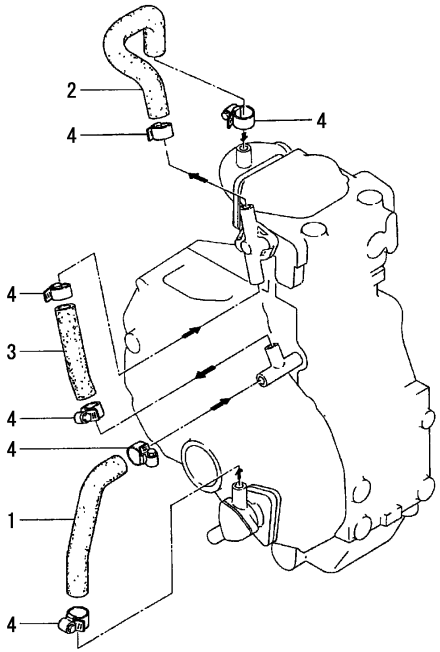

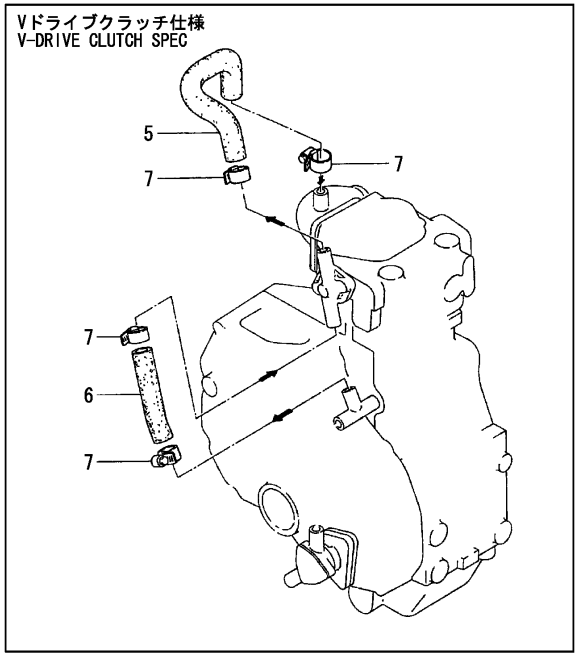

(A)=1GM10(YMI) (D)=1GM10VE
(B)=1GM10C (E)=1GM10L
(C)=1GM10 (F)=

No.	Lev.	Parts No.	Description	Q'ty (A)	(B)	(C)	(D)	(E)	(F)	I	R
1	1	128170-49010	PIPE, WATER A	1	1	1		1			
2	1	128170-49040	PIPE, WATER B	1	1	1		1			
3	1	128170-49050	PIPE, WATER C	1	1	1		1			
4	1	23000-022000	CLAMP, 22	6	6	6		6			
5	1	128170-49040	PIPE, WATER B	1		1	1				
6	1	128170-49050	PIPE, WATER C	1		1	1				
7	1	23000-022000	CLAMP, 22	4		4	4				

N:Old $\xleftarrow[\text{No}]{\text{Yes}}$ New, Q:Old $\xleftarrow[\text{Yes}]{\text{No}}$ New, R:Old $\xleftarrow[\text{Yes}]{\text{Yes}}$ New, S:Old $\xleftarrow[\text{No}]{\text{No}}$ New, W:Add, Z:Discontinued, F:Interchangeable by set, K:Q'ty Change

Copyright (C) YANMAR CO., LTD. All RightsReserved.

Fig.33. THERMOSTAT

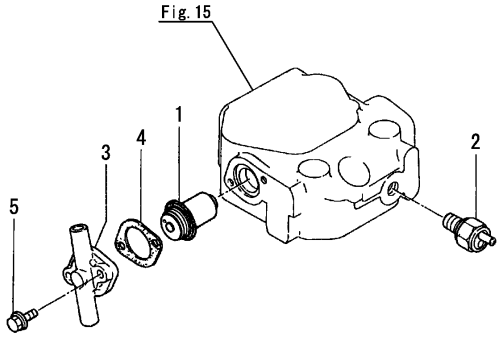

(A)=1GM10(YMI) (D)=1GM10VE
(B)=1GM10C (E)=1GM10L
(C)=1GM10 (F)=

No.	Lev.	Parts No.	Description	Q'ty (A)	(B)	(C)	(D)	(E)	(F)	I	R
1	1	105582-49200	THERMOSTAT	1	1	1	1	1			
2	1	128275-91340	SWITCH, TEMPERATURE	1	1	1	1	1			
3	1	128170-49150	COVER, THERMOSTAT	1	1	1	1	1			
4	1	104211-49160	GASKET, THERMO COVER	1	1	1	1	1			
5	1	26106-060202	BOLT, M6X 20 PLATED	2	2	2	2	2			

N:Old $\xleftrightarrow[\text{No}]{\text{Yes}}$ New, Q:Old $\xleftrightarrow[\text{Yes}]{\text{No}}$ New, R:Old $\xleftrightarrow[\text{Yes}]{\text{Yes}}$ New, S:Old $\xleftrightarrow[\text{No}]{\text{No}}$ New, W:Add, Z:Discontinued, F:Interchangeable by set, K:Q'ty Change

Copyright (C) YANMAR CO., LTD. All RightsReserved.

Fig.34. COOLING WATER PIPE

(A)=1GM10(YMI)
(B)=1GM10C
(C)=1GM10
(D)=1GM10VE
(E)=1GM10L
(F)=

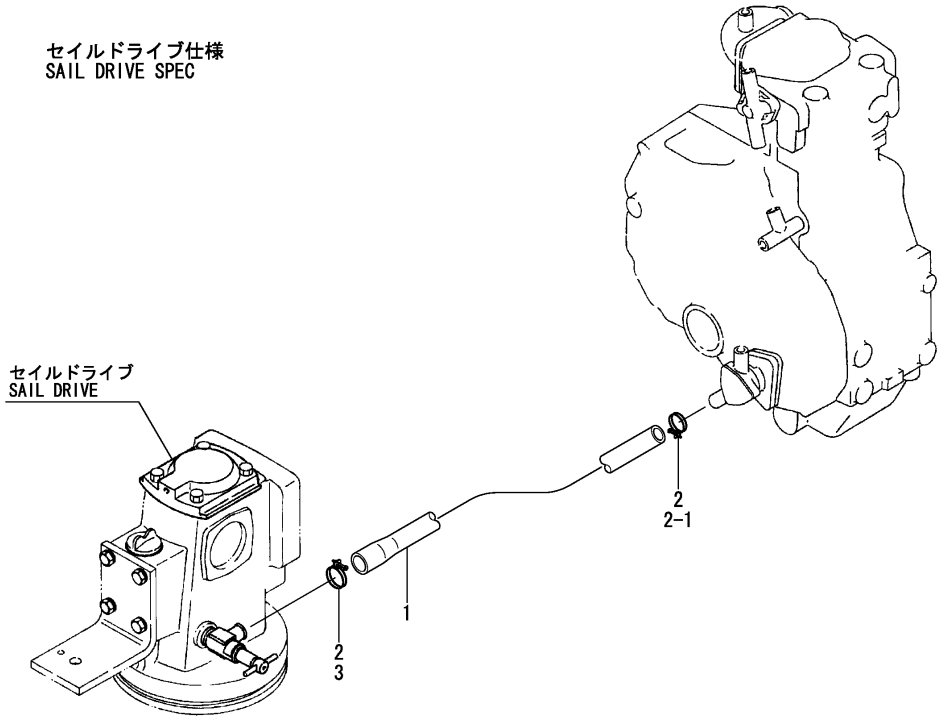

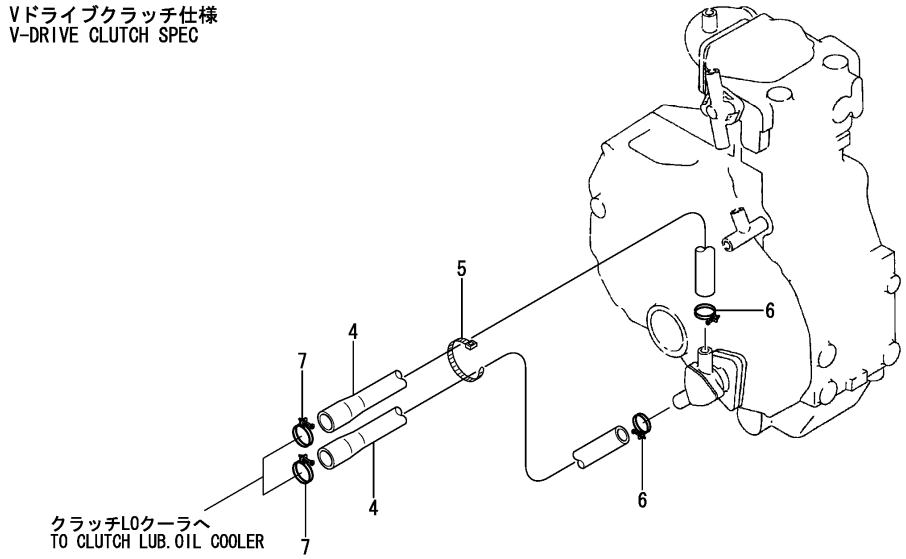

No.	Lev.	Parts No.	Description	Q'ty (A)	(B)	(C)	(D)	(E)	(F)	I	R
1	1	128170-49080	PIPE, WATER		1						
1-1	1	128170-49081	PIPE, WATER		1					N	
		(B=E00231)									
1-2	1	128377-49170	PIPE, WATER 13X1M		1					R	
		(B=E04164)									
2	1	23000-022000	CLAMP, 22		2						
2-1	1	23000-022000	CLAMP, 22		1					K	
		(B=E00231)									
3	1	23000-025000	CLAMP, 25		1					W	
		(B=E00231)									
4	1	128170-49081	PIPE, WATER	2		2	2				
5	1	121750-59890	BAND, NYLON	1		1	1				
6	1	23000-022000	CLAMP, 22	2		2	2				
7	1	23000-025000	CLAMP, 25	2		2	2				

N:Old $\xleftarrow[\text{No}]{\text{Yes}}$ New, Q:Old $\xleftarrow[\text{Yes}]{\text{No}}$ New, R:Old $\xleftarrow[\text{Yes}]{\text{Yes}}$ New, S:Old $\xleftarrow[\text{No}]{\text{No}}$ New, W:Add, Z:Discontinued, F:Interchangeable by set, K:Q'ty Change

Copyright (C) YANMAR CO., LTD. All RightsReserved.

Fig.35. FUEL INJECTION PUMP

(A)=1GM10(YMI) (D)=1GM10VE
(B)=1GM10C (E)=1GM10L
(C)=1GM10 (F)=

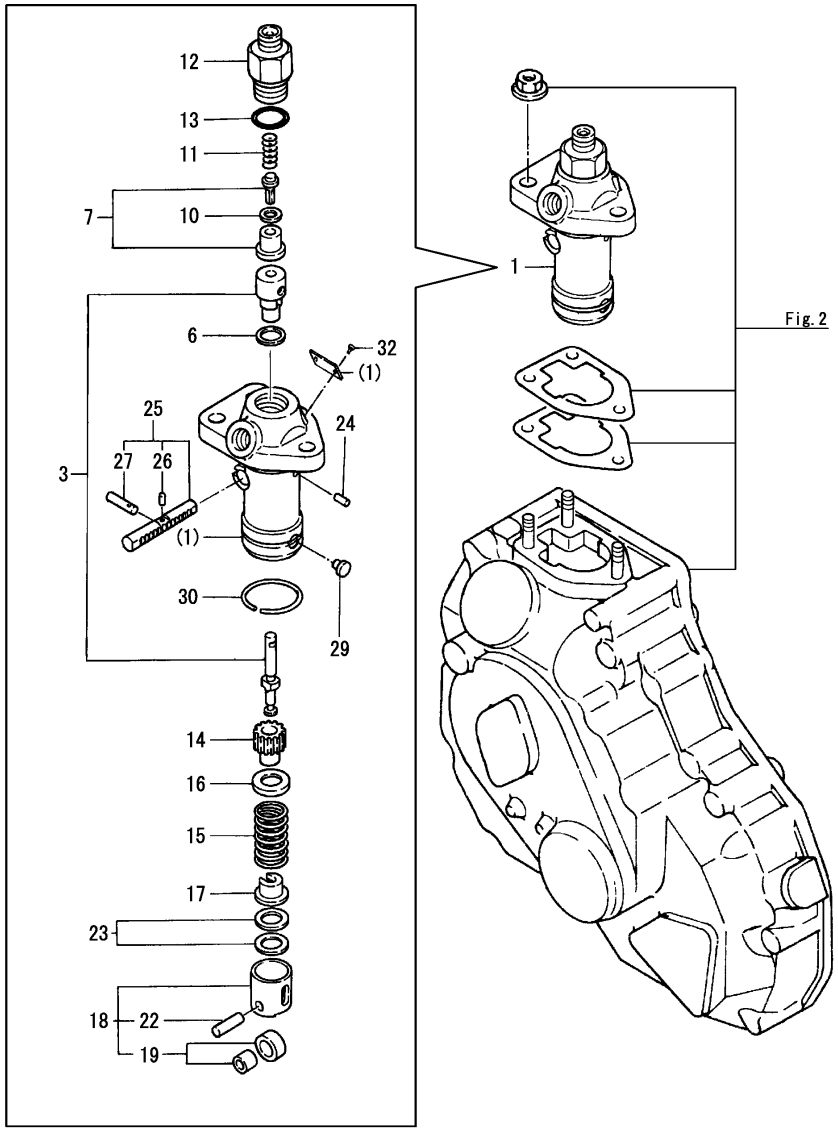

No.	Lev.	Parts No.	Description	Q'ty (A)	(B)	(C)	(D)	(E)	(F)	I	R
1	1	728171-51100	PUMP ASSY, INJECTION	1	1	1	1				
3	2	128170-51101	PLUNGER ASSY	1	1	1	1				
6	2	124950-51270	GASKET, VALVE SEAT	1	1	1	1				
7	2	128170-51300	VALVE ASSY, DELIVERY	1	1	1	1				
7-1	2	105500-51300	VALVE ASSY, DELIVERY	1	1	1	1			N	
	(A=EXXXXX)	(B=EXXXXX)	(C=EXXXXX) (D=EXXXXX)								
10	2	124550-51350	GASKET, DELIVERY	1	1	1	1				
11	2	124550-51320	SPRING, DELIVERY	1	1	1	1				
12	2	124550-51341	HOLDER, DELIVERY L43	1	1	1	1				
13	2	124550-51370	O-RING, DELIVERY	1	1	1	1				
14	2	124950-51510	PINION	1	1	1	1				
15	2	124950-51190	SPRING, PLUNGER	1	1	1	1				
16	2	174307-51170	SEAT, SPRING A	1	1	1	1				
16-1	2	158600-51170	RETAINER, SPRING	1	1	1	1			R	
	(A=E23994)	(B=E04164)	(C=E02122) (D=EXXXXX)								
17	2	174307-51181	RETAINER, SPRING B	1	1	1	1				
18	2	724550-51520	GUIDE, PLUNGER	1	1	1	1				
19	3	711100-51540	ROLLER ASSY	1	1	1	1				
22	3	174100-54120	PIN, TAPPET ROLLER	1	1	1	1				
23	2	174307-51700	SHIM SET, PLUNGER	1	1	1	1				
24	2	103854-51251	PIN, PLUNGER	1	1	1	1				
25	2	128170-51500	RACK ASSY, CONTROL	1	1	1	1				
26	3	121450-51550	PIN, RACK	1	1	1	1				
27	3	124550-51590	RETAINER	1	1	1	1				
29	2	104271-51450	PIECE, GUIDE	1	1	1	1				
30	2	104271-51460	CIRCLIP, TAPPET PIN	1	1	1	1				
32	2	124220-51890	RIVET	2	2	2	2				

N:Old $\xleftrightarrow[\text{No}]{\text{Yes}}$ New, Q:Old $\xleftrightarrow[\text{Yes}]{\text{No}}$ New, R:Old $\xleftrightarrow[\text{Yes}]{\text{Yes}}$ New, S:Old $\xleftrightarrow[\text{No}]{\text{No}}$ New, W:Add, Z:Discontinued, F:Interchangeable by set, K:Q'ty Change

Copyright (C) YANMAR CO., LTD. All RightsReserved.

Fig.36. FUEL INJECTION PUMP

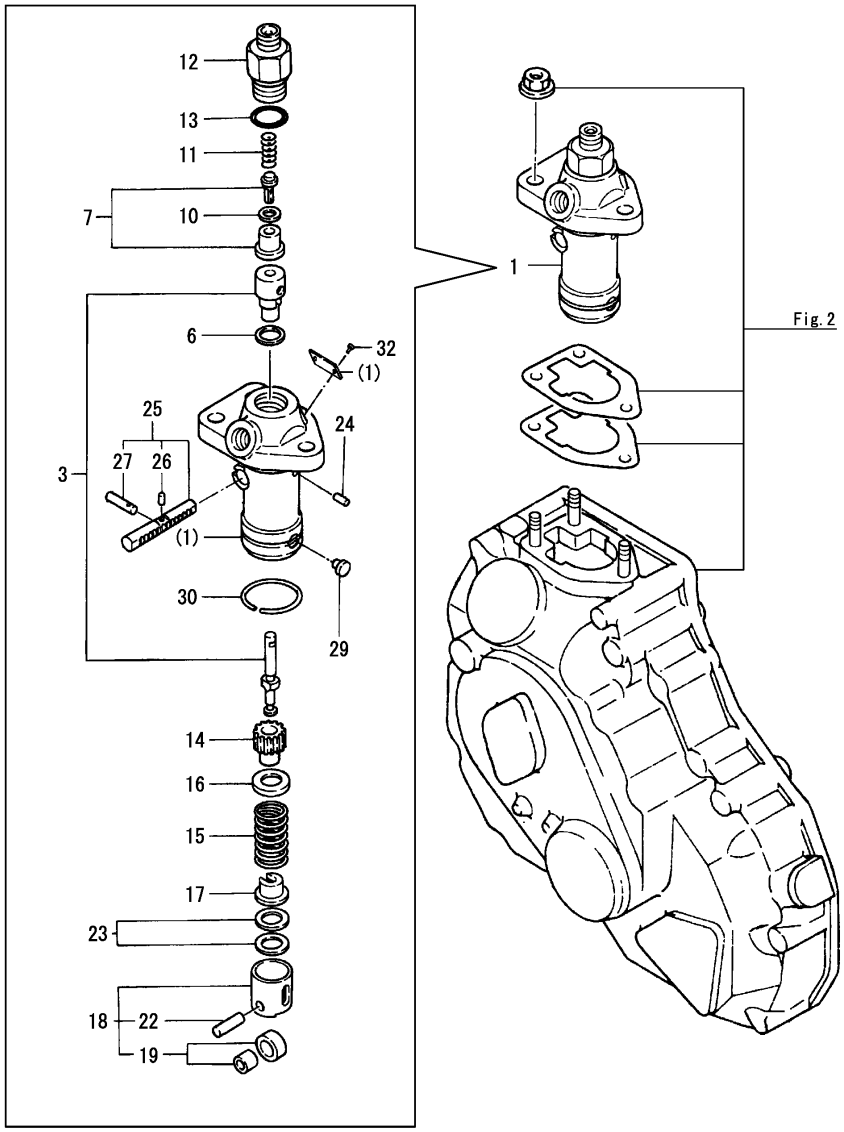

(A)=1GM10(YMI)
(B)=1GM10C
(C)=1GM10
(D)=1GM10VE
(E)=1GM10L
(F)=

No.	Lev.	Parts No.	Description	Q'ty (A)	(B)	(C)	(D)	(E)	(F)	I	R
1	1	728173-51100	PUMP ASSY, INJECTION					1			
3	2	121454-51100	PLUNGER ASSY					1			
6	2	124950-51270	GASKET, VALVE SEAT					1			
7	2	128170-51300	VALVE ASSY, DELIVERY					1			
10	2	124550-51350	GASKET, DELIVERY					1			
11	2	124550-51320	SPRING, DELIVERY					1			
12	2	124550-51341	HOLDER, DELIVERY L43					1			
13	2	124550-51370	O-RING, DELIVERY					1			
14	2	124950-51510	PINION					1			
15	2	124950-51190	SPRING, PLUNGER					1			
16	2	174307-51170	SEAT, SPRING A					1			
17	2	174307-51181	RETAINER, SPRING B					1			
18	2	724550-51520	GUIDE, PLUNGER					1			
19	3	711100-51540	ROLLER ASSY					1			
22	3	174100-54120	PIN, TAPPET ROLLER					1			
23	2	174307-51700	SHIM SET, PLUNGER					1			
24	2	103854-51251	PIN, PLUNGER					1			
25	2	128170-51500	RACK ASSY, CONTROL					1			
26	3	121450-51550	PIN, RACK					1			
27	3	124550-51590	RETAINER					1			
29	2	104271-51450	PIECE, GUIDE					1			
30	2	104271-51460	CIRCLIP, TAPPET PIN					1			
32	2	124220-51890	RIVET					2			

N:Old ◄Yes/No► New, Q:Old ◄No/Yes► New, R:Old ◄Yes/Yes► New, S:Old ◄No/No► New, W:Add, Z:Discontinued, F:Interchangeable by set, K:Q'ty Change

Copyright (C) YANMAR CO., LTD. All RightsReserved.

Fig.37. FUEL FEED PUMP

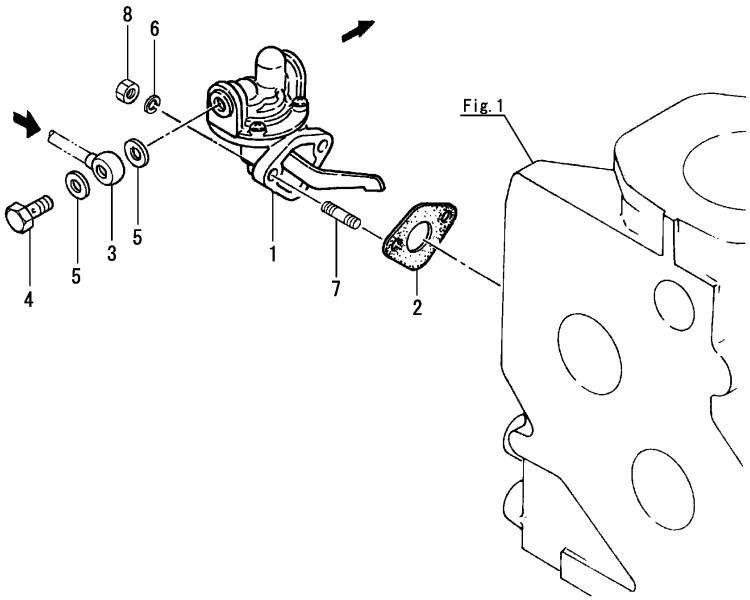

(A)=1GM10(YMI) (D)=1GM10VE
(B)=1GM10C (E)=1GM10L
(C)=1GM10 (F)=

No.	Lev.	Parts No.	Description	Q'ty (A)	(B)	(C)	(D)	(E)	(F)	I	R
1	1	105582-52010	PUMP ASSY, FUEL FEED	1	1	1	1	1			
2	1	121520-01850	GASKET	1	1	1		1			
2-1	1	121520-01851	GASKET, FEED PUMP	1	1	1	1	1		N	
	(A=E09063)	(B=E00908)	(C=E00898)	(E=E00341)							
3	1	104264-59030	JOINT, PIPE 8	1	1	1	1	1			
4	1	105582-59150	BOLT, PIPE JOINT M8	1	1	1	1	1			
5	1	23414-080000	GASKET, 8X1.0	2	2	2		2			
5-1	1	23414-080012	GASKET, 8X1.0	2	2	2	2	2		N	
	(A=E10103)	(B=E01018)	(C=E01022)	(E=E00349)							
6	1	22217-060000	WASHER, SPRING 6	2	2	2	2	2			
7	1	26216-060162	STUD, M6X 16	2	2	2	2	2			
8	1	26716-060002	NUT, M6	2	2	2	2	2			

N:Old $\overset{\text{Yes}}{\underset{\text{No}}{\leftrightarrow}}$ New, Q:Old $\overset{\text{No}}{\underset{\text{Yes}}{\leftrightarrow}}$ New, R:Old $\overset{\text{Yes}}{\underset{\text{Yes}}{\leftrightarrow}}$ New, S:Old $\overset{\text{No}}{\underset{\text{No}}{\leftrightarrow}}$ New, W:Add, Z:Discontinued, F:Interchangeable by set, K:Q'ty Change

Copyright (C) YANMAR CO., LTD. All RightsReserved.

Fig.38. FUEL INJECTION VALVE

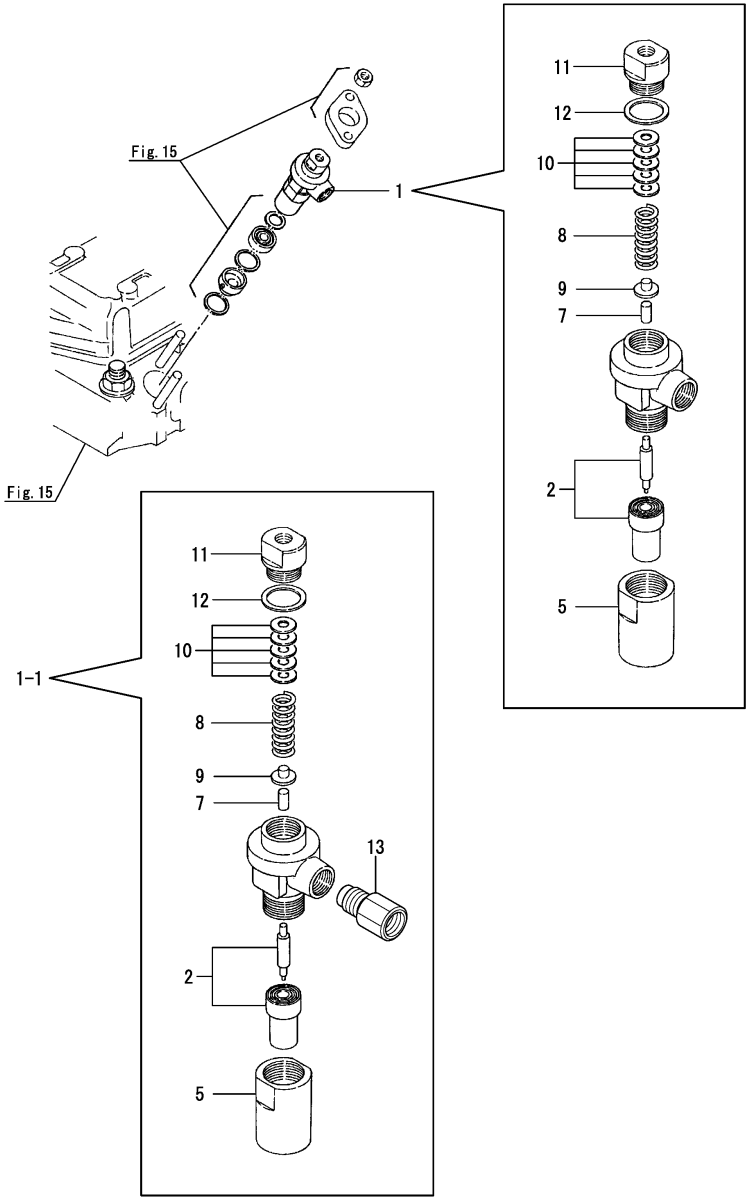

(A)=1GM10(YMI) (D)=1GM10VE
(B)=1GM10C (E)=1GM10L
(C)=1GM10 (F)=

No.	Lev.	Parts No.	Description	Q'ty (A)	(B)	(C)	(D)	(E)	(F)	I	R
1	1	728170-53100	VALVE ASSY,INJECTION	1	1	1	1	1			
1-1	1	728277-53100	VALVE ASSY,INJECTION	1	1	1	1	1		S	1
	(A=EZZZZZ)	(B=EZZZZZ)	(C=EZZZZZ) (D=EXXXXX)	(E=EXXXXX)							
2	2	124770-53000	VALVE ASSY,INJECTION	1	1	1	1	1			
5	2	128170-53080	NUT, VALVE CASE	1	1	1	1	1			
7	2	113200-53110	SPINDLE, INTER	1	1	1	1	1			
8	2	104211-53120	SPRING, NOZZLE	1	1	1	1	1			
9	2	113200-53120	RETAINER, SPRING	1	1	1	1	1			
10	2	110250-53150	SHIM SET	1	1	1	1	1			
11	2	103854-53180	RETAINER, SPRING	1	1	1	1	1			
12	2	172100-53200	GASKET	1	1	1	1	1			
13	2	128277-53300	JOINT ASSY, PIPE	1	1	1	1	1		W	1
	(A=EZZZZZ)	(B=EZZZZZ)	(C=EZZZZZ) (D=EXXXXX)	(E=EXXXXX)							

Remarks
(1)Interchangeable by simultaneous replacement with Fig.41 No.1-1.

N:Old $\xleftarrow[\text{No}]{\text{Yes}}$ New, Q:Old $\xleftarrow[\text{Yes}]{\text{No}}$ New, R:Old $\xleftarrow[\text{Yes}]{\text{Yes}}$ New, S:Old $\xleftarrow[\text{No}]{\text{No}}$ New, W:Add, Z:Discontinued, F:Interchangeable by set, K:Q'ty Change

Copyright (C) YANMAR CO., LTD. All RightsReserved.

Fig.39. FUEL STRAINER

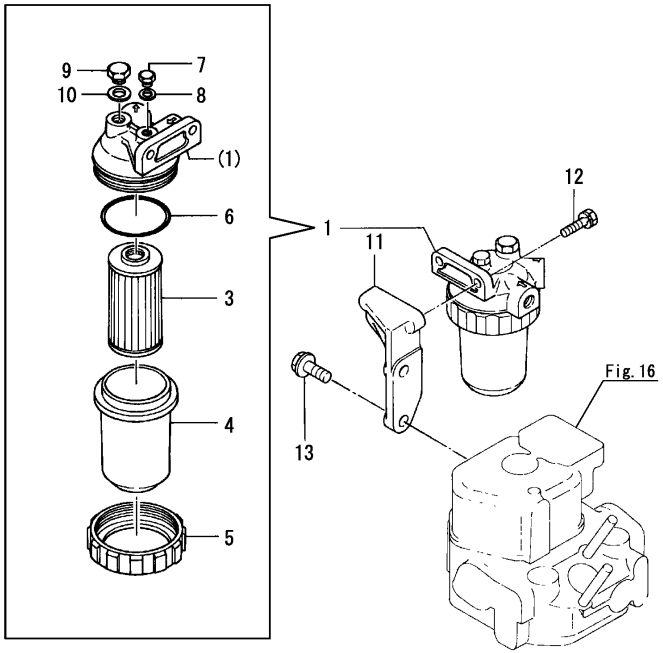

(A)=1GM10(YMI) (D)=1GM10VE
(B)=1GM10C (E)=1GM10L
(C)=1GM10 (F)=

No.	Lev.	Parts No.	Description	Q'ty (A)	(B)	(C)	(D)	(E)	(F)	I	R
1	1	124790-55601	STRAINER ASSY, FUEL	1	1	1	1				
3	2	104500-55710	ELEMENT, FUEL FILTER	1	1	1	1				
4	2	121370-55730	CUP, STRAINER	1	1	1	1				
5	2	110250-55610	RING, CUP RETAINING	1	1	1	1				
6	2	24341-000440	O-RING, 1AS44.0	1	1	1	1				
7	2	101720-55750	PLUG, HEXAGON M6	1	1	1	1				
8	2	23418-060000	GASKET, 6X1.0	1	1	1	1				
9	2	135210-51900	PLUG	1	1	1	1				
10	2	23418-080000	GASKET, 8X1.0	1	1	1					
10-1	2	23414-080012	GASKET, 8X1.0	1	1	1	1			N	
	(A=EXXXXX)	(B=EXXXXX)	(C=EXXXXX)								
11	1	128170-55610	BRACKET, FILTER	1	1	1	1				
12	1	26013-060162	BOLT, M6X 16	2	2	2	2				
13	1	26106-080202	BOLT, M8X 20 PLATED	2	2	2	2				

N:Old $\xleftarrow[\text{No}]{\text{Yes}}$ New, Q:Old $\xleftarrow[\text{Yes}]{\text{No}}$ New, R:Old $\xleftarrow[\text{Yes}]{\text{Yes}}$ New, S:Old $\xleftarrow[\text{No}]{\text{No}}$ New, W:Add, Z:Discontinued, F:Interchangeable by set, K:Q'ty Change

Copyright (C) YANMAR CO., LTD. All RightsReserved.

Fig.40. FUEL STRAINER

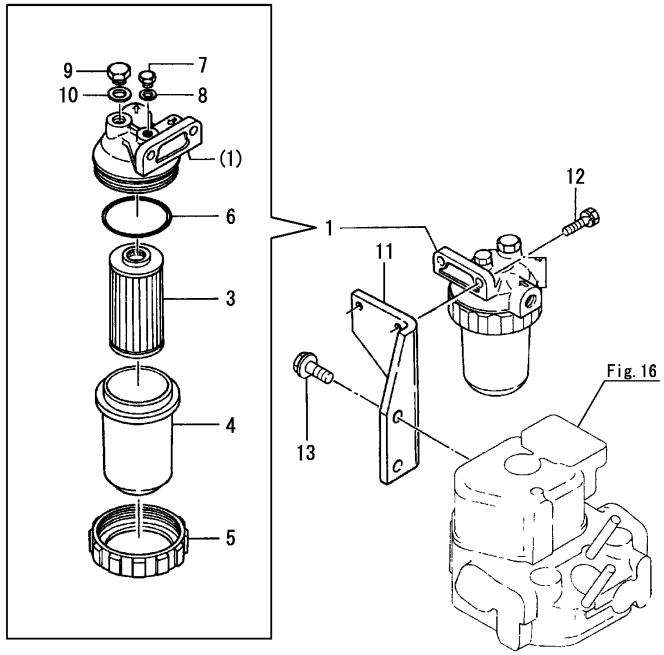

(A)=1GM10(YMI) (D)=1GM10VE
(B)=1GM10C (E)=1GM10L
(C)=1GM10 (F)=

No.	Lev.	Parts No.	Description	Q'ty (A)	(B)	(C)	(D)	(E)	(F)	I	R
1	1	124790-55601	STRAINER ASSY, FUEL					1			
3	2	104500-55710	ELEMENT, FUEL FILTER					1			
4	2	121370-55730	CUP, STRAINER					1			
5	2	110250-55610	RING, CUP RETAINING					1			
6	2	24341-000440	O-RING, 1AS44.0					1			
7	2	101720-55750	PLUG, HEXAGON M6					1			
8	2	23418-060000	GASKET, 6X1.0					1			
9	2	135210-51900	PLUG					1			
10	2	23418-080000	GASKET, 8X1.0					1			
10-1	2	23414-080012	GASKET, 8X1.0					1		N	
			(E=EXXXXX)								
11	1	128172-55610	BRACKET, FILTER					1			
12	1	26013-060182	BOLT, M6X 18					2			
13	1	26106-080162	BOLT, M8X 16 PLATED					2			

N:Old ◄Yes/No► New, Q:Old ◄No/Yes► New, R:Old ◄Yes/Yes► New, S:Old ◄No/No► New, W:Add, Z:Discontinued, F:Interchangeable by set, K:Q'ty Change

Copyright (C) YANMAR CO., LTD. All RightsReserved.

Fig.41. FUEL INJECTION PIPE

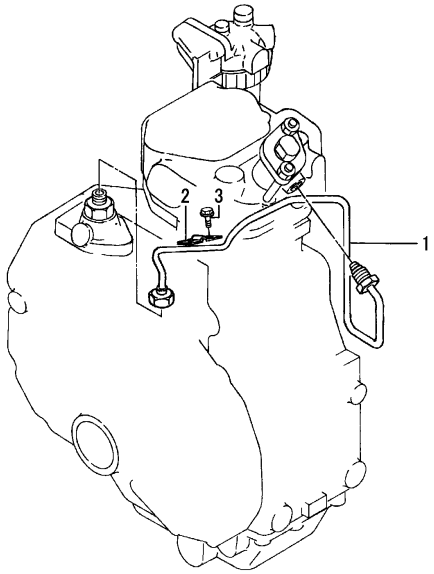

(A)=1GM10(YMI) (D)=1GM10VE
(B)=1GM10C (E)=1GM10L
(C)=1GM10 (F)=

No.	Lev.	Parts No.	Description	Q'ty (A)	(B)	(C)	(D)	(E)	(F)	I	R
1	1	128170-59811	PIPE ASSY, INJECTION	1	1	1	1	1			
1-1	1	128170-59812	PIPE ASSY, INJECTION	1	1	1	1	1		S	1
	(A=EZZZZZ)	(B=EZZZZZ)	(C=EZZZZZ) (D=EXXXXX)	(E=EXXXXX)							
2	1	103854-59650	RETAINER, PIPE A	1	1	1	1	1			
3	1	26013-060122	BOLT, M6X 12	2	2	2	2	2			

Remarks
(1)Interchangeable by simultaneous replacement with Fig.38 No.13.

N:Old $\xleftrightarrow[\text{No}]{\text{Yes}}$ New, Q:Old $\xleftrightarrow[\text{Yes}]{\text{No}}$ New, R:Old $\xleftrightarrow[\text{Yes}]{\text{Yes}}$ New, S:Old $\xleftrightarrow[\text{No}]{\text{No}}$ New, W:Add, Z:Discontinued, F:Interchangeable by set, K:Q'ty Change

Copyright (C) YANMAR CO., LTD. All RightsReserved.

Fig.42. FUEL PIPE

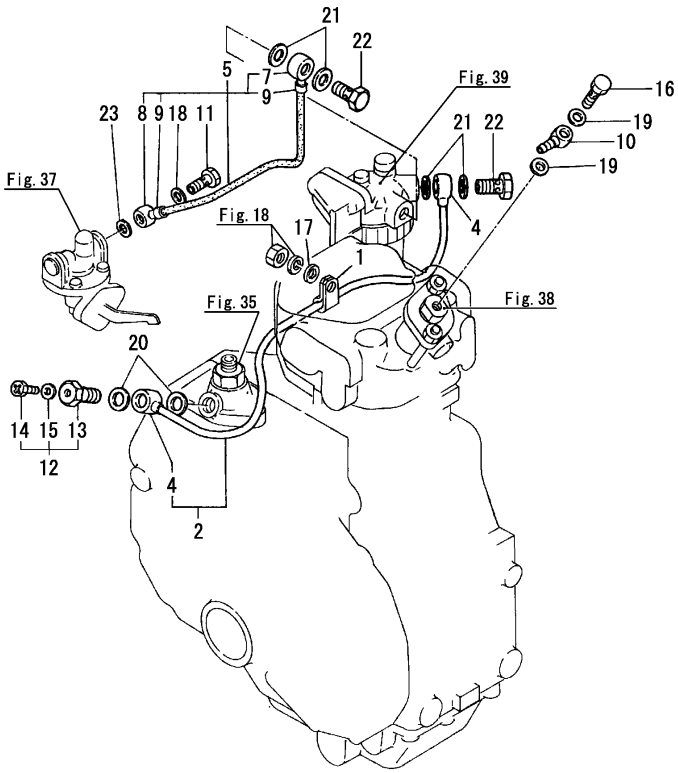

(A)=1GM10(YMI) (D)=1GM10VE
(B)=1GM10C (E)=1GM10L
(C)=1GM10 (F)=

No.	Lev.	Parts No.	Description	Q'ty (A)	(B)	(C)	(D)	(E)	(F)	I	R
1	1	124450-39240	RETAINER, PIPE	1	1	1	1				
2	1	128170-59010	PIPE ASSY, FUEL A	1	1	1	1				
4	2	23341-060000	JOINT, PIPE 6-12	2	2	2	2				
5	1	128170-59081	PIPE ASSY, FUEL B	1	1	1	1				
5-1	1	128170-59082	PIPE ASSY, FUEL B	1	1	1	1			N	
	(A=EXXXXX)	(B=EXXXXX)	(C=EXXXXX) (D=EXXXXX)								
7	2	104264-59020	JOINT	1	1	1	1				
8	2	104264-59030	JOINT, PIPE 8	1	1	1	1				
9	2	104264-59040	CAP, PIPE	2	2	2	2				
9-1	2	23000-016000	CLAMP, 16	2	2	2	2			N	
	(A=EXXXXX)	(B=EXXXXX)	(C=EXXXXX) (D=EXXXXX)								
10	1	104264-59030	JOINT, PIPE 8	1	1	1	1				
11	1	105582-59150	BOLT, PIPE JOINT M8	1	1	1	1				
12	1	103854-59191	BOLT ASSY, JOINT M12	1	1	1	1				
13	2	103854-59201	BOLT, PIPE JOINT M12	1	1	1	1				
14	2	124060-59380	PLUG, M6	1	1	1	1				
15	2	43400-500390	SEAL WASHER 6S	1	1	1					
15-1	2	22190-060002	WASHER, SEAL 6	1	1	1	1			N	
	(A=E12740)	(B=E01385)	(C=E01195)								
16	1	101147-59810	BOLT, PIPE JOINT M8	1	1	1	1				
17	1	22117-080000	WASHER, 8	1	1	1	1				
18	1	23414-080000	GASKET, 8X1.0	1	1	1	1				
18-1	1	22190-080002	WASHER, SEAL 8	1	1	1	1			N	
	(A=EXXXXX)	(B=EXXXXX)	(C=EXXXXX) (D=EXXXXX)								
19	1	23414-080000	GASKET, 8X1.0	2	2	2	2				
19-1	1	22190-080002	WASHER, SEAL 8	2	2	2	2			N	
	(A=EXXXXX)	(B=EXXXXX)	(C=EXXXXX) (D=EXXXXX)								
20	1	23414-120000	GASKET, 12X1.0	2	2	2	2				
20-1	1	22190-120002	WASHER, SEAL 12	2	2	2	2			N	
	(A=EXXXXX)	(B=EXXXXX)	(C=EXXXXX) (D=EXXXXX)								
21	1	23414-120000	GASKET, 12X1.0	4	4	4	4				
21-1	1	22190-120002	WASHER, SEAL 12	4	4	4	4			N	
	(A=EXXXXX)	(B=EXXXXX)	(C=EXXXXX) (D=EXXXXX)								
22	1	23857-060000	BOLT, JOINT 6	2	2	2	2				
23	1	104884-59170	GASKET, 8	1	1	1	1				

N:Old $\frac{\text{Yes}}{\text{No}}$ New, Q:Old $\frac{\text{No}}{\text{Yes}}$ New, R:Old $\frac{\text{Yes}}{\text{Yes}}$ New, S:Old $\frac{\text{No}}{\text{No}}$ New, W:Add, Z:Discontinued, F:Interchangeable by set, K:Q'ty Change

Copyright (C) YANMAR CO., LTD. All RightsReserved.

Fig.43. FUEL PIPE

(A)=1GM10(YMI)
(B)=1GM10C
(C)=1GM10
(D)=1GM10VE
(E)=1GM10L
(F)=

No.	Lev.	Parts No.	Description	Q'ty (A)	(B)	(C)	(D)	(E)	(F)	I	R
1	1	124450-39240	RETAINER, PIPE					1			
2	1	128172-59010	PIPE ASSY, FUEL A					1			
4	2	23341-060000	JOINT, PIPE 6-12					2			
5	1	128172-59080	PIPE ASSY, FUEL B					1			
7	2	104264-59020	JOINT					1			
8	2	104264-59030	JOINT, PIPE 8					1			
9	2	104264-59040	CAP, PIPE					2			
10	1	104264-59030	JOINT, PIPE 8					1			
11	1	105582-59150	BOLT, PIPE JOINT M8					1			
12	1	103854-59191	BOLT ASSY, JOINT M12					1			
13	2	103854-59201	BOLT, PIPE JOINT M12					1			
14	2	124060-59380	PLUG, M6					1			
15	2	43400-500390	SEAL WASHER 6S					1			
15-1	2	22190-060002	WASHER, SEAL 6		(E=E00731)			1		N	
16	1	101147-59810	BOLT, PIPE JOINT M8					1			
17	1	22117-080000	WASHER, 8					1			
18	1	23414-080000	GASKET, 8X1.0					1			
18-1	1	23414-080012	GASKET, 8X1.0		(E=E00349)			1		N	
19	1	23414-080000	GASKET, 8X1.0					2			
19-1	1	23414-080012	GASKET, 8X1.0		(E=E00349)			2		N	
20	1	23414-120000	GASKET, 12X1.0					2			
21	1	23414-120000	GASKET, 12X1.0					4			
22	1	23857-060000	BOLT, JOINT 6					2			
23	1	104884-59170	GASKET, 8					1			

Remarks
*This figure are not illustrated.

N:Old $\overset{\text{Yes}}{\underset{\text{No}}{\leftrightarrows}}$ New, Q:Old $\overset{\text{No}}{\underset{\text{Yes}}{\leftrightarrows}}$ New, R:Old $\overset{\text{Yes}}{\underset{\text{Yes}}{\leftrightarrows}}$ New, S:Old $\overset{\text{No}}{\underset{\text{No}}{\leftrightarrows}}$ New, W:Add, Z:Discontinued, F:Interchangeable by set, K:Q'ty Change

Copyright (C) YANMAR CO., LTD. All RightsReserved.

Fig.44. GOVERNOR DRIVING

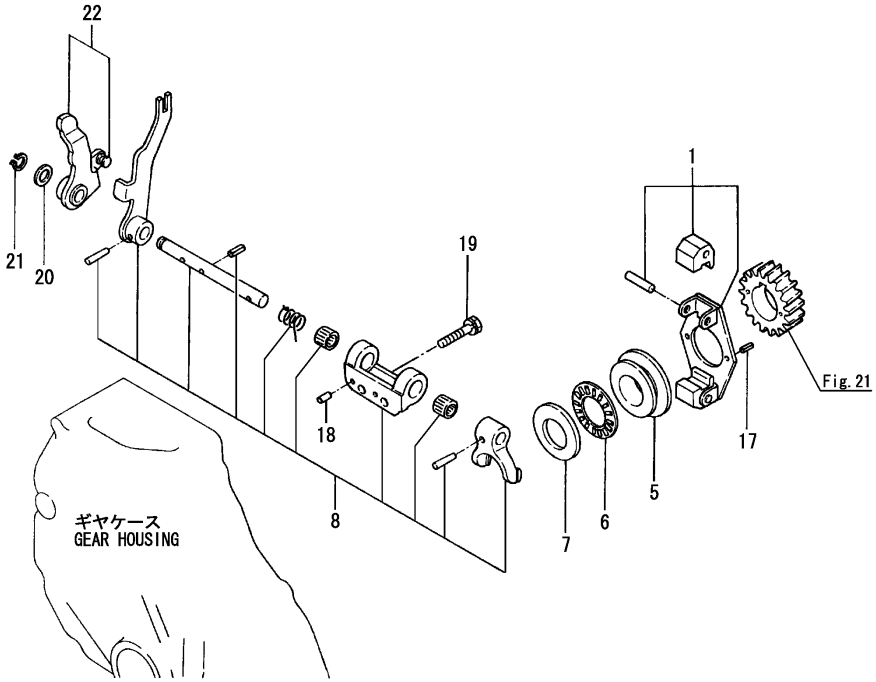

(A)=1GM10(YMI) (D)=1GM10VE
(B)=1GM10C (E)=1GM10L
(C)=1GM10 (F)=

No.	Lev.	Parts No.	Description	Q'ty (A)	(B)	(C)	(D)	(E)	(F)	I	R
1	1	128170-61100	WEIGHT ASSY,GOVERNOR	1	1	1	1				
5	1	121000-61600	SLEEVE, GOVERNOR	1	1	1	1				
6	1	121575-61710	BEARING, FNTA-2542	1	1	1	1				
6-1	1	24166-254202	BEARING, 254202	1	1	1	1			R	
	(A=EXXXXX)	(B=EXXXXX)	(C=EXXXXX) (D=EXXXXX)								
7	1	121575-61720	COLLAR, THRUST	1	1	1	1				
8	1	728170-61560	LEVER ASSY, GOVERNOR	1	1	1	1				
8-1	1	128170-61560	LEVER ASSY	1	1	1	1			R	
	(A=EZZZZZ)	(B=EZZZZZ)	(C=EZZZZZ) (D=EXXXXX)								
17	1	22351-040008	PIN, SPRING 4.0X 8	2	2	2	2				
18	1	22312-040080	PIN, PARALLEL M4X 8	2	2	2	2				
19	1	26013-060302	BOLT, M6X 30	2	2	2	2				
20	1	104211-42130	PIECE, DISTANCE	1	1	1	1				
21	1	22242-000100	RING, 10	1	1	1	1				
22	1	128170-61160	LEVER ASSY, CONTROL	1	1	1					
22-1	1	128170-61161	LEVER ASSY, CONTROL	1	1	1	1			N	
	(A=E12335)	(B=E01349)	(C=E01153)								
22-2	1	128170-61162	LEVER ASSY, CONTROL	1	1	1	1			N	
	(A=E24119)	(B=E04172)	(C=E02122) (D=EXXXXX)								

N:Old $\frac{\text{Yes}}{\text{No}}$ New, Q:Old $\frac{\text{No}}{\text{Yes}}$ New, R:Old $\frac{\text{Yes}}{\text{Yes}}$ New, S:Old $\frac{\text{No}}{\text{No}}$ New, W:Add, Z:Discontinued, F:Interchangeable by set, K:Q'ty Change

Copyright (C) YANMAR CO., LTD. All RightsReserved.

Fig.45. GOVERNOR DRIVING

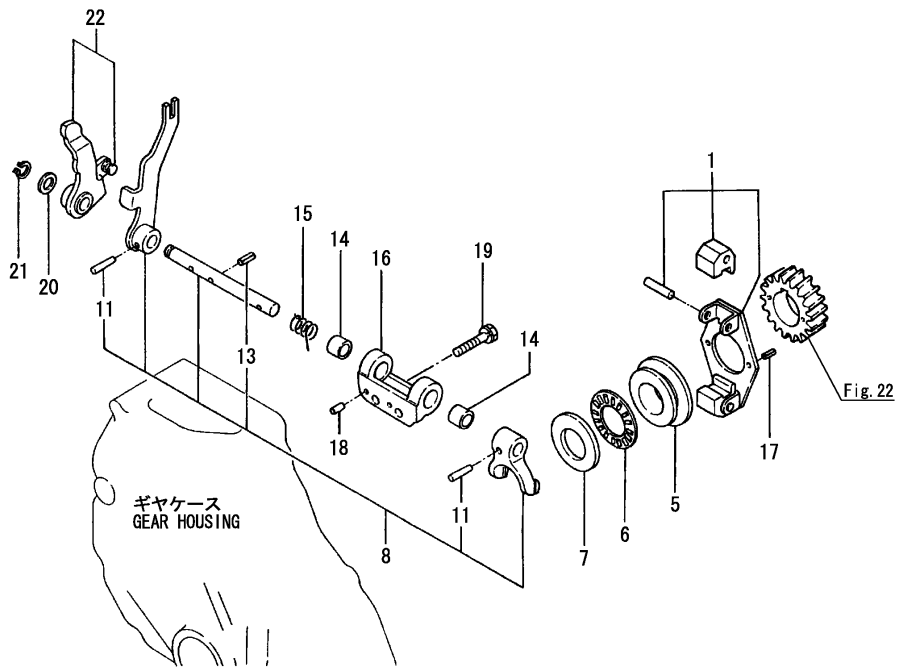

(A)=1GM10(YMI) (D)=1GM10VE
(B)=1GM10C (E)=1GM10L
(C)=1GM10 (F)=

No.	Lev.	Parts No.	Description	Q'ty (A)	(B)	(C)	(D)	(E)	(F)	I	R
1	1	128170-61100	WEIGHT ASSY,GOVERNOR					1			
5	1	121000-61600	SLEEVE, GOVERNOR					1			
6	1	121575-61710	BEARING, FNTA-2542					1			
7	1	121575-61720	COLLAR, THRUST					1			
8	1	728170-61560	LEVER ASSY, GOVERNOR					1			
11	2	22322-030200	PIN, TAPER 3X20					2			
13	2	22351-030012	PIN, SPRING 3.0X12					1			
14	1	171079-61560	BUSH, GOVERNOR SHAFT					2			
15	1	121575-66310	SPRING, STARTING					1			
16	1	128172-61620	SUPPORT, LEVER SHAFT					1			
17	1	22351-040008	PIN, SPRING 4.0X 8					2			
18	1	22312-040080	PIN, PARALLEL M4X 8					2			
19	1	26013-060302	BOLT, M6X 30					2			
20	1	104211-42130	PIECE, DISTANCE					1			
21	1	22242-000100	RING, 10					1			
22	1	128170-61160	LEVER ASSY, CONTROL					1			
22-1	1	128170-61161	LEVER ASSY, CONTROL (E=E00629)					1		N	

N:Old $\xleftarrow[\text{No}]{\text{Yes}}$ New, Q:Old $\xleftarrow[\text{Yes}]{\text{No}}$ New, R:Old $\xleftarrow[\text{Yes}]{\text{Yes}}$ New, S:Old $\xleftarrow[\text{No}]{\text{No}}$ New, W:Add, Z:Discontinued, F:Interchangeable by set, K:Q'ty Change

Copyright (C) YANMAR CO., LTD. All RightsReserved.

Fig.46. CONTROL DEVICE

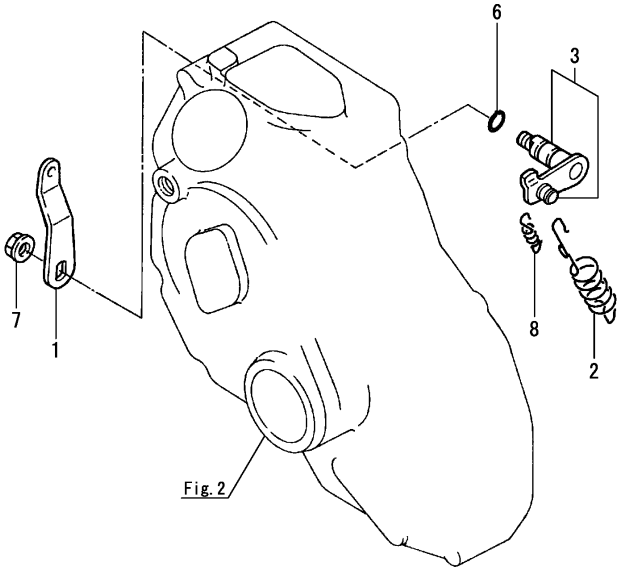

(A)=1GM10(YMI) (D)=1GM10VE
(B)=1GM10C (E)=1GM10L
(C)=1GM10 (F)=

No.	Lev.	Parts No.	Description	Q'ty (A)	(B)	(C)	(D)	(E)	(F)	I	R
1	1	121575-66051	HANDLE, REGULATOR	1	1	1	1				
2	1	128170-66010	SPRING, REGULATOR	1	1	1	1				
3	1	128170-66090	LEVER ASSY,REGULATOR	1	1	1	1				
6	1	24311-000090	O-RING, 1AP9.0	1	1	1	1				
7	1	26366-080002	NUT, M8	1	1	1	1				
7-1	1	26306-080002	NUT, M8	1	1	1	1			N	
	(A=EXXXXX)	(B=EXXXXX)	(C=EXXXXX) (D=EXXXXX)								
8	1	128170-66200	SPRING, REGULATOR	1	1	1	1				

N:Old $\xleftarrow[\text{No}]{\text{Yes}}$ New, Q:Old $\xleftarrow[\text{Yes}]{\text{No}}$ New, R:Old $\xleftarrow[\text{Yes}]{\text{Yes}}$ New, S:Old $\xleftarrow[\text{No}]{\text{No}}$ New, W:Add, Z:Discontinued, F:Interchangeable by set, K:Q'ty Change

Copyright (C) YANMAR CO., LTD. All RightsReserved.

Fig.47. CONTROL DEVICE

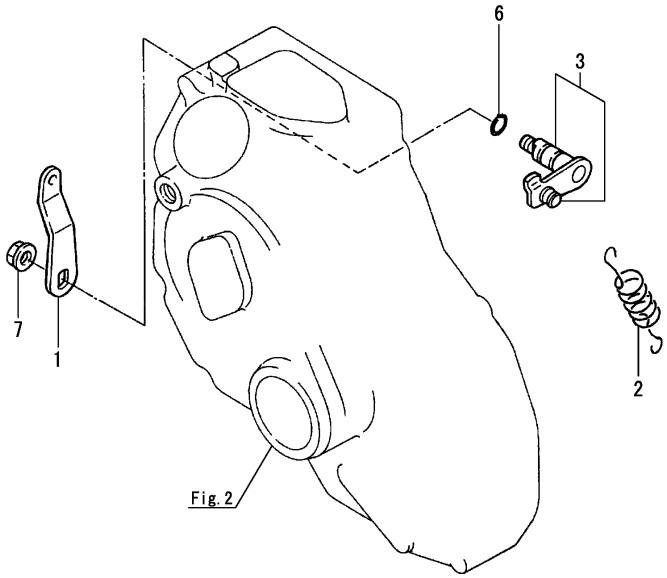

(A)=1GM10(YMI) (D)=1GM10VE
(B)=1GM10C (E)=1GM10L
(C)=1GM10 (F)=

No.	Lev.	Parts No.	Description	Q'ty (A)	(B)	(C)	(D)	(E)	(F)	I	R
1	1	121575-66051	HANDLE, REGULATOR					1			
2	1	128172-66010	SPRING, REGULATOR					1			
3	1	128172-66090	LEVER ASSY,REGULATOR					1			
6	1	24311-000090	O-RING, 1AP9.0					1			
7	1	26366-080002	NUT, M8					1			

N:Old ◄Yes/No► New, Q:Old ◄No/Yes► New, R:Old ◄Yes/Yes► New, S:Old ◄No/No► New, W:Add, Z:Discontinued, F:Interchangeable by set, K:Q'ty Change

Copyright (C) YANMAR CO., LTD. All RightsReserved.

Fig.48. IDLE ADJUSTER

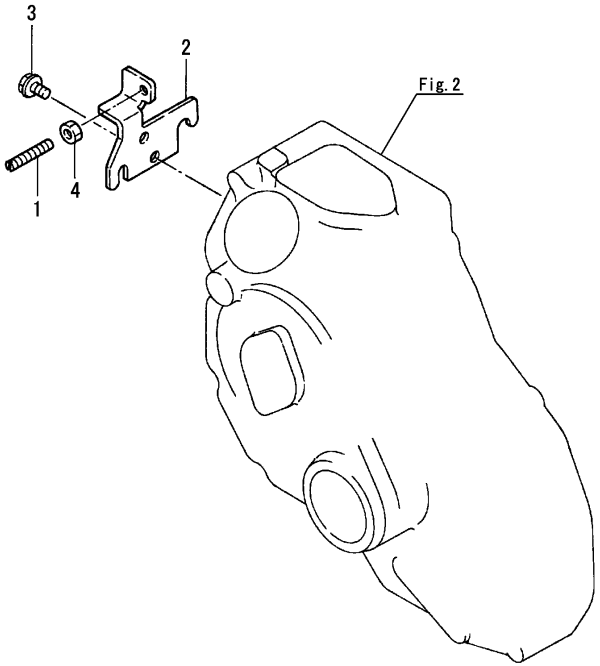

(A)=1GM10(YMI) (D)=1GM10VE
(B)=1GM10C (E)=1GM10L
(C)=1GM10 (F)=

No.	Lev.	Parts No.	Description	Q'ty (A)	(B)	(C)	(D)	(E)	(F)	I	R
1	1	121575-66800	SCREW, ADJUSTING 6	1	1	1		1			
1-1	1	121575-66830	SCREW, ADJUSTER	1	1	1	1	1		N	
	(A=E11181)	(B=E01206)	(C=E01120)	(E=E00395)							
2	1	128170-66850	RETAINER	1	1	1	1	1			
3	1	26106-060122	BOLT, M6X 12 PLATED	2	2	2	2	2			
4	1	26756-060002	NUT, LOCK M6	1	1	1	1	1			

N:Old $\xleftarrow[\text{No}]{\text{Yes}}$ New, Q:Old $\xleftarrow[\text{Yes}]{\text{No}}$ New, R:Old $\xleftarrow[\text{Yes}]{\text{Yes}}$ New, S:Old $\xleftarrow[\text{No}]{\text{No}}$ New, W:Add, Z:Discontinued, F:Interchangeable by set, K:Q'ty Change

Copyright (C) YANMAR CO., LTD. All RightsReserved.

Fig.49. FUEL CONTROL DEVICE

(A)=1GM10(YMI) (D)=1GM10VE
(B)=1GM10C (E)=1GM10L
(C)=1GM10 (F)=

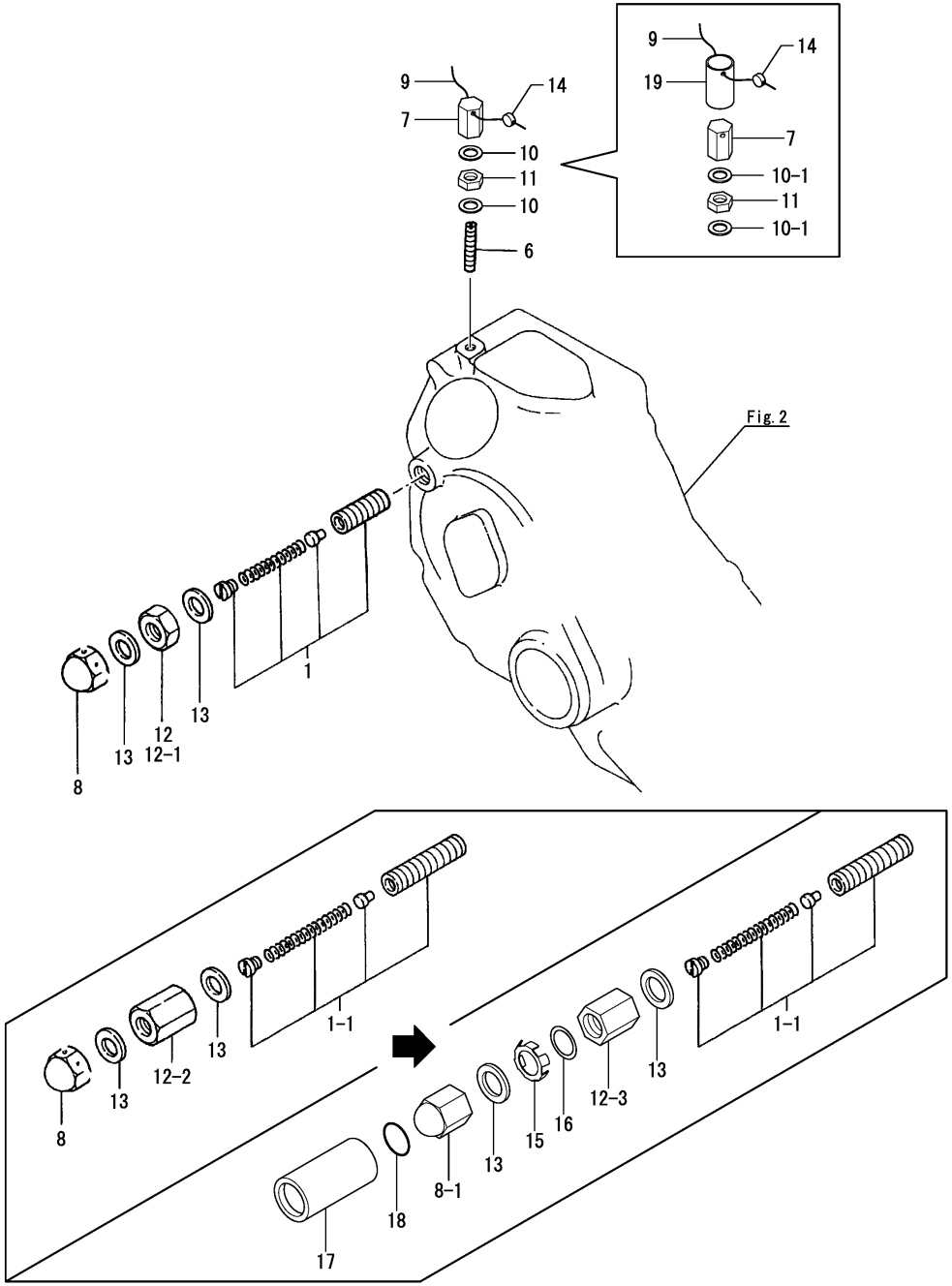

No.	Lev.	Parts No.	Description	Q'ty (A)	(B)	(C)	(D)	(E)	(F)	I	R
1	1	128170-66550	LIMITER ASSY, FUEL	1	1	1		1			
1-1	1	128171-66550	LIMITER ASSY, FUEL	1	1	1	1	1		S	
	(A=E03691)	(B=E00341)	(C=E00336)	(E=E00218)							
6	1	121575-66800	SCREW, ADJUSTING 6	1	1	1		1			
6-1	1	121575-66830	SCREW, ADJUSTER	1	1	1	1	1		N	
	(A=E11181)	(B=E01206)	(C=E01120)	(E=E00395)							
7	1	128170-66870	NUT, CAP M6	1	1	1	1	1			
8	1	128170-66880	NUT, CAP M12	1	1	1	1	1			
8-1	1	128170-66900	NUT, CAP M12	1	1	1	1	1		S	
	(A=EZZZZZ)	(B=EZZZZZ)	(C=EZZZZZ) (D=EXXXXX)	(E=EXXXXX)							
9	1	22451-100000	WIRE, 1.0	1	1	1	1	1			
10	1	23414-060000	GASKET, 6X1.0	2	2	2	2	2			
10-1	1	22190-060002	WASHER, SEAL 6	2	2	2	2	2		S	
	(A=EZZZZZ)	(B=EZZZZZ)	(C=EZZZZZ) (D=EXXXXX)	(E=EXXXXX)							
11	1	26756-060002	NUT, LOCK M6	1	1	1	1	1			
12	1	26756-120002	NUT, LOCK M12	1	1	1		1			
12-1	1	128170-66890	NUT, LOCK M12	1	1	1		1		R	
	(A=*1983.02)	(B=*1983.02)	(C=*1983.02)	(E=*1983.02)							
12-2	1	128171-66890	NUT, LOCK M12	1	1	1	1	1		S	
	(A=E03691)	(B=E00341)	(C=E00336)	(E=E00218)							
12-3	1	128170-66910	NUT, LOCK M12	1	1	1	1	1		S	
	(A=EZZZZZ)	(B=EZZZZZ)	(C=EZZZZZ) (D=EXXXXX)	(E=EXXXXX)							
13	1	43400-500450	SEAL WASHER 12S	2	2	2		2			
13-1	1	22190-120002	WASHER, SEAL 12	2	2	2	2	2		N	
	(A=E12740)	(B=E01385)	(C=E01195)	(E=E00731)							
14	1	135210-61090	LEAD	1	1	1	1	1			
14-1	1	114780-61090	TIN	1	1	1	1	1		N	
	(A=E24609)	(B=E04336)	(C=E02125) (D=EXXXXX)	(E=EXXXXX)							
15	1	129209-61970	LABEL	1	1	1	1	1		W	
	(A=EZZZZZ)	(B=EZZZZZ)	(C=EZZZZZ) (D=EXXXXX)	(E=EXXXXX)							
16	1	174200-51260	GASKET, BARREL	1	1	1	1	1		W	
	(A=EZZZZZ)	(B=EZZZZZ)	(C=EZZZZZ) (D=EXXXXX)	(E=EXXXXX)							
17	1	128170-66950	CASE	1	1	1	1	1		W	
	(A=EZZZZZ)	(B=EZZZZZ)	(C=EZZZZZ) (D=EXXXXX)	(E=EXXXXX)							
18	1	24311-000150	O-RING, 1AP15.0	1	1	1	1	1		W	
	(A=EZZZZZ)	(B=EZZZZZ)	(C=EZZZZZ) (D=EXXXXX)	(E=EXXXXX)							
19	1	128170-66930	COLLAR	1	1	1	1	1		W	
	(A=EZZZZZ)	(B=EZZZZZ)	(C=EZZZZZ) (D=EXXXXX)	(E=EXXXXX)							

N:Old $\overset{\text{Yes}}{\underset{\text{No}}{\leftrightarrow}}$ New, Q:Old $\overset{\text{No}}{\underset{\text{Yes}}{\leftrightarrow}}$ New, R:Old $\overset{\text{Yes}}{\underset{\text{Yes}}{\leftrightarrow}}$ New, S:Old $\overset{\text{No}}{\underset{\text{No}}{\leftrightarrow}}$ New, W:Add, Z:Discontinued, F:Interchangeable by set, K:Q'ty Change

Copyright (C) YANMAR CO., LTD. All RightsReserved.

Fig.50. ENGINE STOP DEVICE

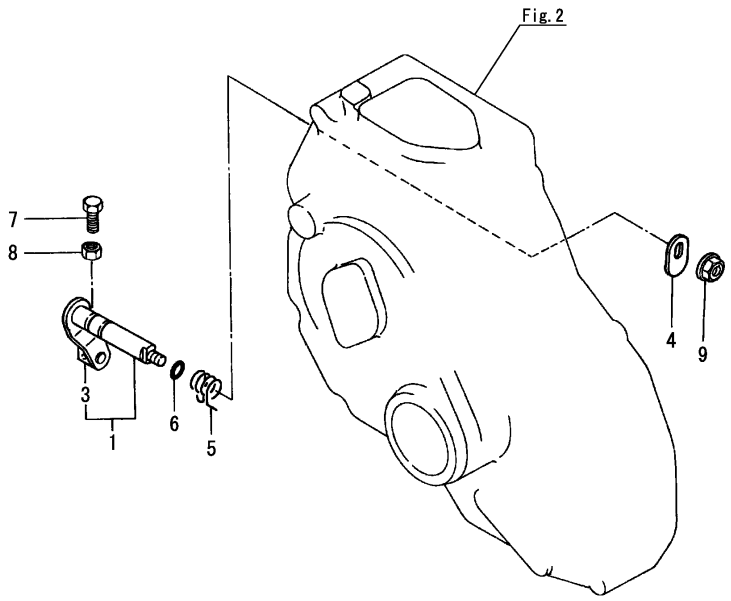

(A)=1GM10(YMI)
(B)=1GM10C
(C)=1GM10
(D)=1GM10VE
(E)=1GM10L
(F)=

No.	Lev.	Parts No.	Description	Q'ty (A)	(B)	(C)	(D)	(E)	(F)	I	R
1	1	128170-66510	LEVER ASSY, STOP	1	1	1	1	1			
3	2	104211-03770	RETAINER, INNER WIRE	1	1	1	1	1			
4	1	121575-66550	CAM	1	1	1	1	1			
5	1	128170-66580	SPRING, RETURN	1	1	1	1	1			
6	1	24311-000070	O-RING, 1AP7.0	1	1	1	1	1			
7	1	26116-050128	BOLT, M5X 12 PLATED	1	1	1	1	1			
8	1	26756-050002	NUT, LOCK M5	1	1	1	1	1			
9	1	26366-060002	NUT, M6	1	1	1	1	1			

N:Old $\overset{\text{Yes}}{\underset{\text{No}}{\leftrightarrow}}$ New, Q:Old $\overset{\text{No}}{\underset{\text{Yes}}{\leftrightarrow}}$ New, R:Old $\overset{\text{Yes}}{\underset{\text{Yes}}{\leftrightarrow}}$ New, S:Old $\overset{\text{No}}{\underset{\text{No}}{\leftrightarrow}}$ New, W:Add, Z:Discontinued, F:Interchangeable by set, K:Q'ty Change

Copyright (C) YANMAR CO., LTD. All RightsReserved.

Fig.51. SPEED REMOTE CONTROL

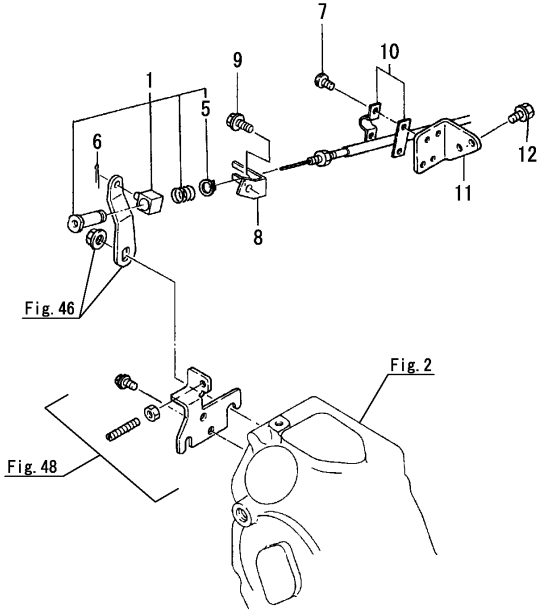

(A)=1GM10(YMI)
(B)=1GM10C
(C)=1GM10
(D)=1GM10VE
(E)=1GM10L
(F)=

No.	Lev.	Parts No.	Description	Q'ty (A)	(B)	(C)	(D)	(E)	(F)	I	R
1	1	105311-67200	RETAINER ASSY	1	1	1	1				
5	2	22242-000100	RING, 10	1	1	1	1				
6	1	22414-250150	PIN, COTTER 2.5X15	1	1	1	1				
7	1	26557-050122	SCREW, M5X12	2	2	2	2				
8	1	128170-67580	BRACKET, CABLE	1	1	1	1				
9	1	26106-060102	BOLT, M6X 10 PLATED	1	1	1	1				
10	1	41710-000410	CLAMP	1	1	1	1				
11	1	128170-67100	BRACKET, CABLE	1	1	1	1				
12	1	26106-060142	BOLT, M6X 14 PLATED	2	2	2	2				

N:Old $\overset{\text{Yes}}{\underset{\text{No}}{\leftrightarrows}}$ New, Q:Old $\overset{\text{No}}{\underset{\text{Yes}}{\leftrightarrows}}$ New, R:Old $\overset{\text{Yes}}{\underset{\text{Yes}}{\leftrightarrows}}$ New, S:Old $\overset{\text{No}}{\underset{\text{No}}{\leftrightarrows}}$ New, W:Add, Z:Discontinued, F:Interchangeable by set, K:Q'ty Change

Copyright (C) YANMAR CO., LTD. All RightsReserved.

Fig.52. SPEED REMOTE CONTROL

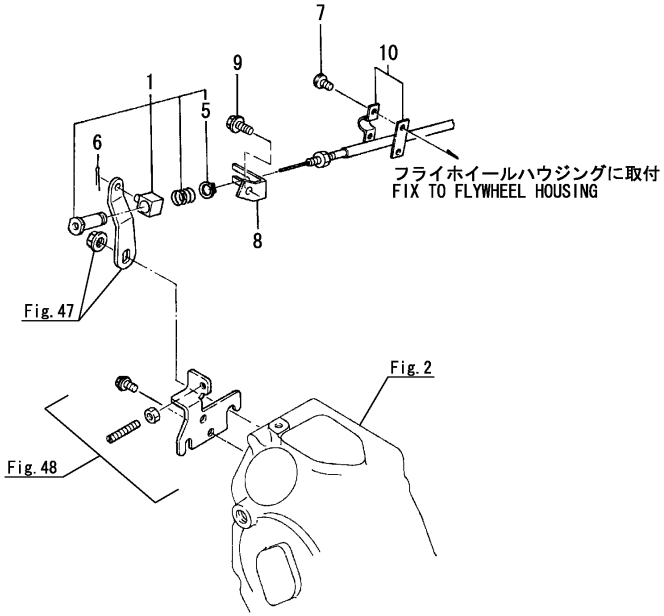

(A)=1GM10(YMI)
(B)=1GM10C
(C)=1GM10
(D)=1GM10VE
(E)=1GM10L
(F)=

No.	Lev.	Parts No.	Description	Q'ty (A)	(B)	(C)	(D)	(E)	(F)	I	R
1	1	105311-67200	RETAINER ASSY					1			
5	2	22242-000100	RING, 10					1			
6	1	22414-250150	PIN, COTTER 2.5X15					1			
7	1	26557-050122	SCREW, M5X12					2			
8	1	128170-67580	BRACKET, CABLE					1			
9	1	26106-060102	BOLT, M6X 10 PLATED					1			
10	1	41710-000410	CLAMP					1			

N:Old $\frac{\text{Yes}}{\text{No}}$ New, Q:Old $\frac{\text{No}}{\text{Yes}}$ New, R:Old $\frac{\text{Yes}}{\text{Yes}}$ New, S:Old $\frac{\text{No}}{\text{No}}$ New, W:Add, Z:Discontinued, F:Interchangeable by set, K:Q'ty Change

Copyright (C) YANMAR CO., LTD. All RightsReserved.

Fig.53. HAND START

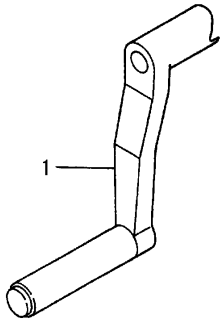

(A)=1GM10(YMI)
(B)=1GM10C
(C)=1GM10
(D)=1GM10VE
(E)=1GM10L
(F)=

No.	Lev.	Parts No.	Description	Q'ty (A)	(B)	(C)	(D)	(E)	(F)	I	R
1	1	128170-76790	HANDLE, STARTING	1	1	1	1				

N:Old ◄Yes/No► New, Q:Old ◄No/Yes► New, R:Old ◄Yes/Yes► New, S:Old ◄No/No► New, W:Add, Z:Discontinued, F:Interchangeable by set, K:Q'ty Change

Copyright (C) YANMAR CO., LTD. All RightsReserved.

Fig.54. STARTING MOTOR

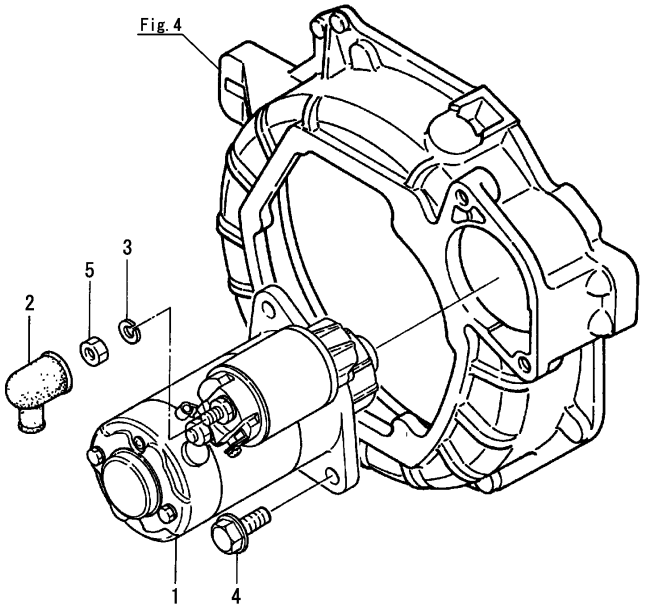

(A)=1GM10(YMI) (D)=1GM10VE
(B)=1GM10C (E)=1GM10L
(C)=1GM10 (F)=

No.	Lev.	Parts No.	Description	Q'ty (A)	(B)	(C)	(D)	(E)	(F)	I	R
1	1	128170-77010	STARTER, S114-303	1	1	1	1				
2	1	124550-77030	COVER, TERMINAL B	1	1	1	1				
3	1	22217-080000	WASHER, SPRING 8	1	1	1	1				
4	1	26106-100302	BOLT, M10X 30 PLATED	2	2	2	2				
5	1	26756-080002	NUT, LOCK M8	1	1	1	1				

N:Old $\xleftrightarrow[\text{No}]{\text{Yes}}$ New, Q:Old $\xleftrightarrow[\text{Yes}]{\text{No}}$ New, R:Old $\xleftrightarrow[\text{Yes}]{\text{Yes}}$ New, S:Old $\xleftrightarrow[\text{No}]{\text{No}}$ New, W:Add, Z:Discontinued, F:Interchangeable by set, K:Q'ty Change

Copyright (C) YANMAR CO., LTD. All RightsReserved.

Fig.55. STARTING MOTOR

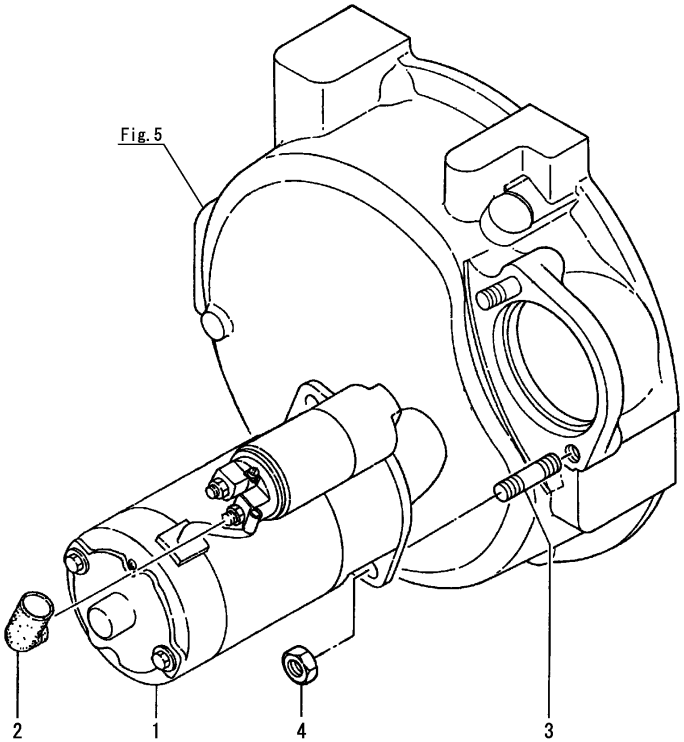

(A)=1GM10(YMI) (D)=1GM10VE
(B)=1GM10C (E)=1GM10L
(C)=1GM10 (F)=

No.	Lev.	Parts No.	Description	Q'ty (A)	(B)	(C)	(D)	(E)	(F)	I	R
1	1	124772-77020	STARTER, S114-244					1			
2	1	124550-77030	COVER, TERMINAL B					1			
3	1	26226-120252	STUD, M12X 25					2			
4	1	26716-120002	NUT, M12					2			

N:Old $\xleftarrow[\text{No}]{\text{Yes}}$ New, Q:Old $\xleftarrow[\text{Yes}]{\text{No}}$ New, R:Old $\xleftarrow[\text{Yes}]{\text{Yes}}$ New, S:Old $\xleftarrow[\text{No}]{\text{No}}$ New, W:Add, Z:Discontinued, F:Interchangeable by set, K:Q'ty Change

Copyright (C) YANMAR CO., LTD. All RightsReserved.

Fig.56. GENERATOR(HITACHI)

(A)=1GM10(YMI) (D)=1GM10VE
(B)=1GM10C (E)=1GM10L
(C)=1GM10 (F)=

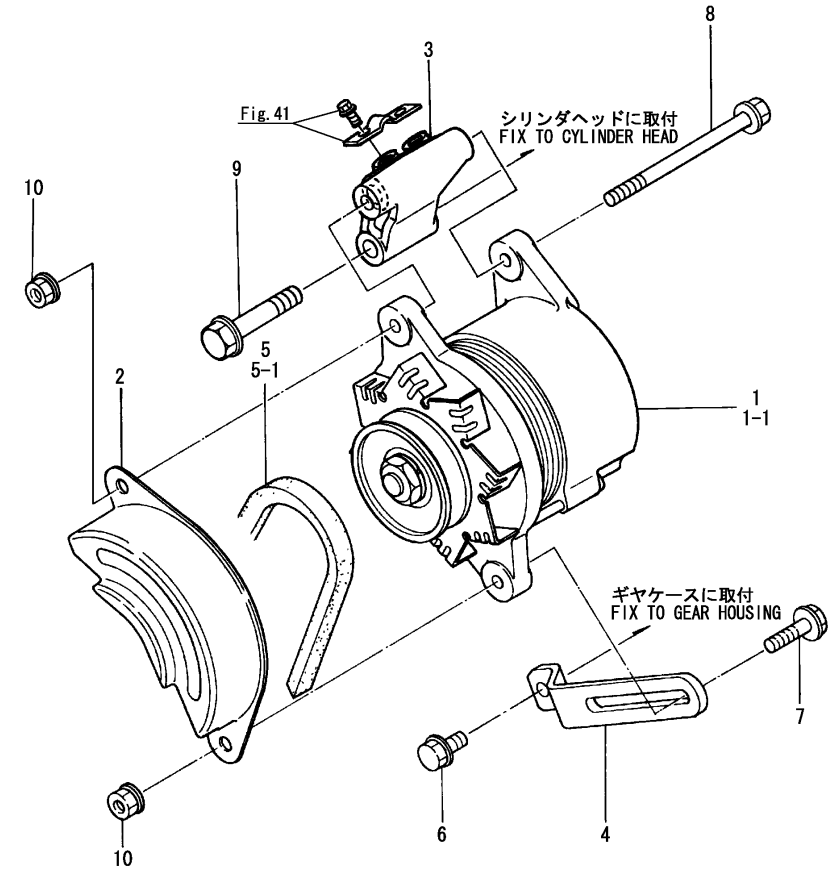

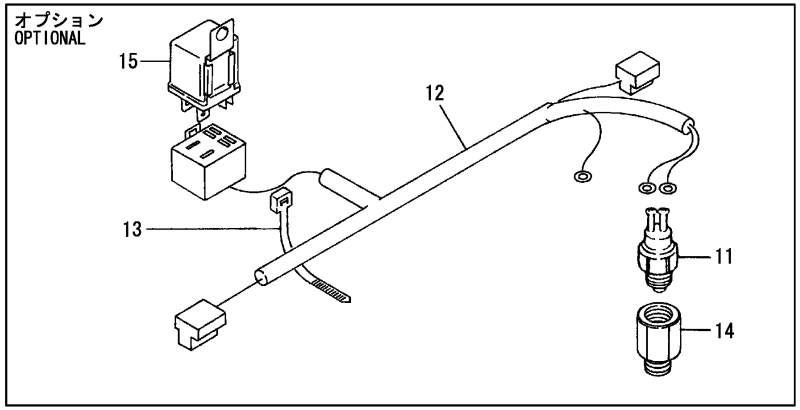

No.	Lev.	Parts No.	Description	Q'ty (A)	(B)	(C)	(D)	(E)	(F)	I	R
1	1	128270-77200	GENERATOR, LR135-105	1	1	1		1			
1-1	1	128171-77200	GENERATOR, LR135-126	1	1	1	1	1		S	
	(A=E03691)	(B=E00341)	(C=E00336)	(E=E00218)							
2	1	121250-77210	COVER, GENERATOR	1	1	1		1		Z	
	(A=E03691)	(B=E00341)	(C=E00336)	(E=E00218)							
3	1	128170-77251	BRACKET, GENERATOR	1	1	1	1	1			
4	1	124465-77330	ADJUSTER, BELT	1	1	1	1	1			
5	1	128170-77350	V-BELT, HM29	1	1	1		1			
5-1	1	105582-77790	V-BELT, HM31	1	1	1	1	1		S	
	(A=E03691)	(B=E00341)	(C=E00336)	(E=E00218)							
6	1	26106-080202	BOLT, M8X 20 PLATED	1	1	1	1	1			
7	1	26106-080302	BOLT, M8X 30 PLATED	1	1	1	1	1			
8	1	26106-081202	BOLT, M8X120 PLATED	1	1	1	1	1			
9	1	26106-100602	BOLT, M10X 60 PLATED	2	2	2	2	2			
10	1	26366-080002	NUT, M8	2	2	2	2	2			
10-1	1	26306-080002	NUT, M8	2	2	2	2	2		N	
	(A=EXXXXX)	(B=EXXXXX)	(C=EXXXXX) (D=EXXXXX)	(E=EXXXXX)							
11	1	171375-44900	SWITCH, TEMPERATURE	1	1	1	1			W	
	(A=E12061)	(B=E01328)	(C=E01139)								
11-1	1	171375-44900	SWITCH, TEMPERATURE	1	1	1	1			Z	
	(A=E24892)	(B=E04369)	(C=EXXXXX) (D=EXXXXX)								
12	1	128171-77910	HARNESS, WIRE	1	1	1	1			W	
	(A=E12061)	(B=E01328)	(C=E01139)								
12-1	1	128171-77910	HARNESS, WIRE	1	1	1	1			Z	
	(A=E24892)	(B=E04369)	(C=EXXXXX) (D=EXXXXX)								
13	1	160370-78950	BAND, WIRE L-98	1	1	1	1			W	
	(A=E12169)	(B=E01339)	(C=E01141)								
13-1	1	160370-78950	BAND, WIRE L-98	1	1	1	1			Z	
	(A=E24892)	(B=E04369)	(C=EXXXXX) (D=EXXXXX)								
14	1	128171-91810	SPACER, SWITCH	1	1	1	1			W	
	(A=E12061)	(B=E01328)	(C=E01139)								
14-1	1	128171-91810	SPACER, SWITCH	1	1	1	1			Z	
	(A=E24892)	(B=E04369)	(C=EXXXXX) (D=EXXXXX)								
15	1	128171-91850	RELAY, MAGNET	1	1	1	1			W	
	(A=E12061)	(B=E01328)	(C=E01139)								
15-1	1	128171-91850	RELAY, MAGNET	1	1	1	1			Z	
	(A=E24892)	(B=E04369)	(C=EXXXXX) (D=EXXXXX)								

N:Old $\overset{\text{Yes}}{\underset{\text{No}}{\leftrightarrow}}$ New, Q:Old $\overset{\text{No}}{\underset{\text{Yes}}{\leftrightarrow}}$ New, R:Old $\overset{\text{Yes}}{\underset{\text{Yes}}{\leftrightarrow}}$ New, S:Old $\overset{\text{No}}{\underset{\text{No}}{\leftrightarrow}}$ New, W:Add, Z:Discontinued, F:Interchangeable by set, K:Q'ty Change

Copyright (C) YANMAR CO., LTD. All RightsReserved.

Fig.57. BATTERY SWITCH(OPTIONAL)

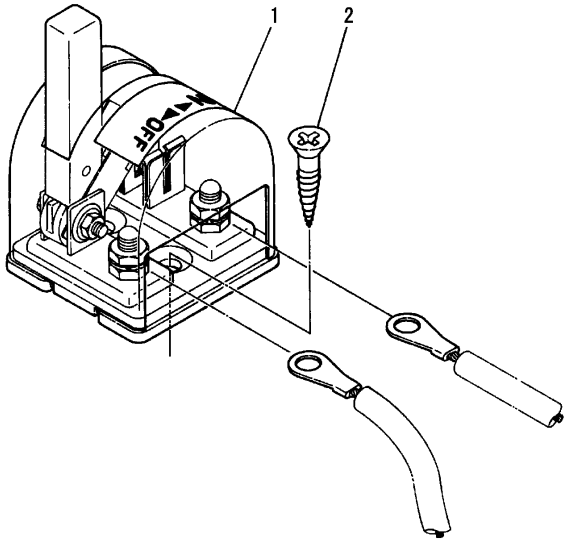

(A)=1GM10(YMI)
(B)=1GM10C
(C)=1GM10
(D)=1GM10VE
(E)=1GM10L
(F)=

No.	Lev.	Parts No.	Description	Q'ty (A)	(B)	(C)	(D)	(E)	(F)	I	R
1	1	123310-77640	SWITCH, BATTERY	1	1	1	1	1			
2	1	22724-800380	SCREW, 8.0X38	2	2	2	2	2			

N:Old ◄Yes/No► New, Q:Old ◄No/Yes► New, R:Old ◄Yes/Yes► New, S:Old ◄No/No► New, W:Add, Z:Discontinued, F:Interchangeable by set, K:Q'ty Change

Copyright (C) YANMAR CO., LTD. All RightsReserved.

Fig.58. WIRE HARNESS

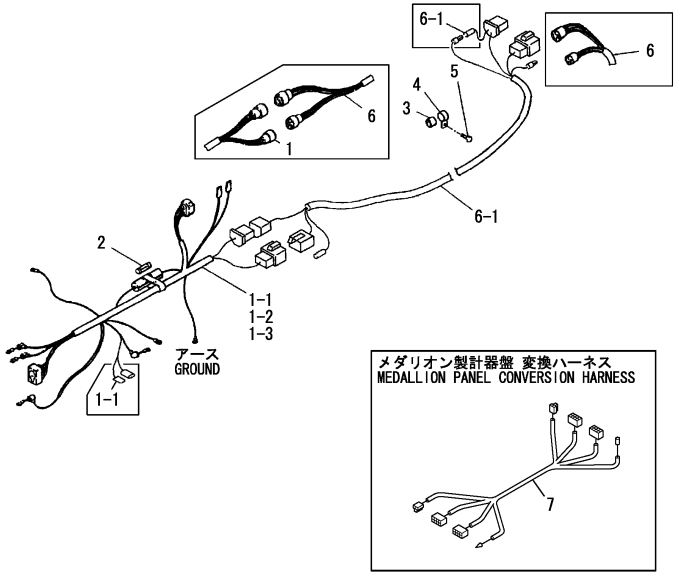

Remarks
(1)For HITACHI generator.
(2)For DENSO generator.
(3)Optional parts.
(4)Fig.94 No.1 & Fig.95 No.1, 2, 3 interchangeable by set.
(5)No.1-3 & Fig.87 No.1-1 interchangeable by set.

(A)=1GM10(YMI) (D)=1GM10VE
(B)=1GM10C (E)=1GM10L
(C)=1GM10 (F)=

No.	Lev.	Parts No.	Description	Q'ty (A)	(B)	(C)	(D)	(E)	(F)	I	R
1	1	128170-77921	HARNESS, WIRE	1	1	1					1
1-1	1	128171-77921	HARNESS, WIRE	1	1	1	1			S	1
	(A=E12169)	(B=E01339)	(C=E01141)								
1-2	1	128171-77922	HARNESS, WIRE	1	1	1				S	2
	(A=E24892)	(B=E04369)	(C=*2012.07.)								
1-3	1	128171-77923	HARNESS, WIRE	1	1	1				F	5
	(A=E25107)	(B=E04417)	(C=E02130)								
2	1	46150-003680	FUSE, 30A	1	1	1	1				
3	1	124770-77940	PROTECTOR, HARNESS	1	1	1	1				
4	1	124070-77950	CLAMP	1	1	1	1				
5	1	26106-080142	BOLT, M8X 14 PLATED	1	1	1	1				
6	1	128170-77500	CORD, EXTENSION 3000	1	1	1					3
6-1	1	128391-77700	HARNESS, WIRE 3M	1	1	1	1			S	3
	(A=E12169)	(B=E01339)	(C=E01141)								
7	1	164100-23900	HARNESS, CONVERSION	1	1					W	4
	(A=E24811)	(B=E04353)									

N:Old $\xleftarrow[\text{No}]{\text{Yes}}$ New, Q:Old $\xleftarrow[\text{Yes}]{\text{No}}$ New, R:Old $\xleftarrow[\text{Yes}]{\text{Yes}}$ New, S:Old $\xleftarrow[\text{No}]{\text{No}}$ New, W:Add, Z:Discontinued, F:Interchangeable by set, K:Q'ty Change

Copyright (C) YANMAR CO., LTD. All RightsReserved.

Fig.59. WIRE HARNESS

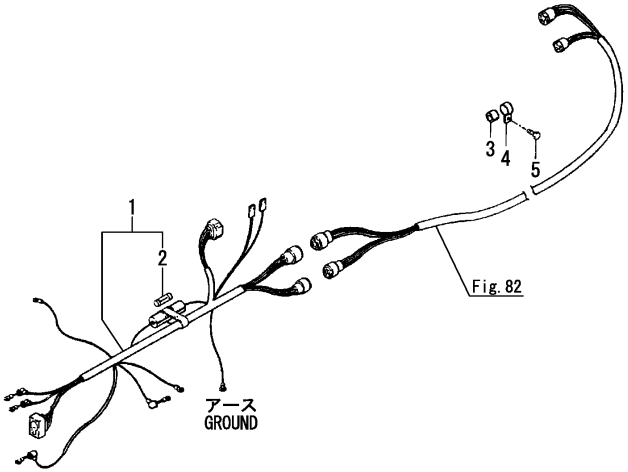

(A)=1GM10(YMI)
(B)=1GM10C
(C)=1GM10
(D)=1GM10VE
(E)=1GM10L
(F)=

No.	Lev.	Parts No.	Description	Q'ty (A)	(B)	(C)	(D)	(E)	(F)	I	R
1	1	128170-77921	HARNESS, WIRE					1			
2	2	46150-003680	FUSE, 30A					1			
3	1	124770-77940	PROTECTOR, HARNESS					1			
4	1	124070-77950	CLAMP					1			
5	1	26106-080162	BOLT, M8X 16 PLATED					1			

N:Old $\xleftrightarrow[\text{No}]{\text{Yes}}$ New, Q:Old $\xleftrightarrow[\text{Yes}]{\text{No}}$ New, R:Old $\xleftrightarrow[\text{Yes}]{\text{Yes}}$ New, S:Old $\xleftrightarrow[\text{No}]{\text{No}}$ New, W:Add, Z:Discontinued, F:Interchangeable by set, K:Q'ty Change

Copyright (C) YANMAR CO., LTD. All RightsReserved.

Fig.60. CLUTCH & DUMPER DISK

(A)=1GM10(YMI) (D)=1GM10VE
(B)=1GM10C (E)=1GM10L
(C)=1GM10 (F)=

No.	Lev.	Parts No.	Description	Q'ty (A)	(B)	(C)	(D)	(E)	(F)	I	R
1	1	128170-81030	CLUTCH ASSY, 2.21	1							
1-1	1	128171-81010	CLUTCH ASSY, 2.21	1						F	1
	(A=E00358)										
1-2	1	128171-81110	CLUTCH ASSY, 2.21	1						N	
	(A=E03414)										
1-3	1	128171-81310	CLUTCH ASSY, 2.21	1						R	
	(A=EXXXXX)										
1-4	1	128171-81510	CLUTCH, I=2.21	1						S	3
	(A=E23998)										
2	1	128170-81010	CLUTCH ASSY, I=2.62	1							
2-1	1	128171-81020	CLUTCH ASSY, I=2.62	1						F	1
	(A=E00358)										
2-2	1	128171-81120	CLUTCH ASSY, I=2.62	1						N	
	(A=E03414)										
2-3	1	128171-81320	CLUTCH ASSY, I=2.62	1						R	
	(A=EXXXXX)										
2-4	1	128171-81520	CLUTCH, I=2.62	1						S	3
	(A=E23998)										
3	1	128170-81020	CLUTCH ASSY, I=3.22	1							
3-1	1	128171-81030	CLUTCH ASSY, I=3.22	1						F	1
	(A=E00358)										
3-2	1	128171-81130	CLUTCH ASSY, I=3.22	1						N	
	(A=E03414)										
3-3	1	128171-81330	CLUTCH ASSY, I=3.22	1						N	
	(A=EXXXXX)										
3-4	1	128171-81530	CLUTCH, I=3.22	1						S	3
	(A=E23998)										
4	1	128371-81050	DISK, DAMPER D170	1							
4-1	1	177070-03501	DISK, DAMPER D170	1						N	
	(A=E10103)										
5	1	128171-81150	SPACER, CLUTCH	1						Z	
	(A=E00357)										
6	1	26013-080142	BOLT, M8X 14	6							
7	1	26106-080402	BOLT, M8X 40 PLATED	8							
7-1	1	26106-080452	BOLT, M8X 45 PLATED	8						S	
	(A=E00358)										
7-2	1	26106-080282	BOLT, M8X 28 PLATED	8						N	
	(A=E23998)										
8	1	128170-81030	CLUTCH ASSY, 2.21			1					
8-1	1	128171-81010	CLUTCH ASSY, 2.21			1				F	2
			(C=E00120)								
8-2	1	128171-81110	CLUTCH ASSY, 2.21			1				N	
			(C=E00285)								
8-3	1	128171-81310	CLUTCH ASSY, 2.21			1				R	
			(C=EXXXXX)								
9	1	128170-81010	CLUTCH ASSY, I=2.62			1					
9-1	1	128171-81020	CLUTCH ASSY, I=2.62			1				F	2
			(C=E00120)								
9-2	1	128171-81120	CLUTCH ASSY, I=2.62			1				N	
			(C=E00285)								
9-3	1	128171-81320	CLUTCH ASSY, I=2.62			1				R	

Remarks
*This figure are not illustrated.
(1)Interchangeable by simultaneous replacement with No.7-1.
(2)Interchangeable by simultaneous replacement with No.14-1.
(3)Interchangeable by simultaneous replacement with Fig.63 No.1-1,2-1, 5-1.

N:Old $\xleftrightarrow[\text{No}]{\text{Yes}}$ New, Q:Old $\xleftrightarrow[\text{Yes}]{\text{No}}$ New, R:Old $\xleftrightarrow[\text{Yes}]{\text{Yes}}$ New, S:Old $\xleftrightarrow[\text{No}]{\text{No}}$ New, W:Add, Z:Discontinued, F:Interchangeable by set, K:Q'ty Change

++ CONTINUE ++

Copyright (C) YANMAR CO., LTD. All RightsReserved.

Fig.60. CLUTCH & DUMPER DISK

(A)=1GM10(YMI)
(B)=1GM10C
(C)=1GM10
(D)=1GM10VE
(E)=1GM10L
(F)=

No.	Lev.	Parts No.	Description	Q'ty (A)	(B)	(C)	(D)	(E)	(F)	I	R
			(C=EXXXXX)								
10	1	128170-81020	CLUTCH ASSY, I=3.22			1					
10-1	1	128171-81030	CLUTCH ASSY, I=3.22			1				F	2
			(C=E00120)								
10-2	1	128171-81130	CLUTCH ASSY, I=3.22			1				N	
			(C=E00285)								
10-3	1	128171-81330	CLUTCH ASSY, I=3.22			1				N	
			(C=EXXXXX)								
11	1	128371-81050	DISK, DAMPER D170			1					
11-1	1	177070-03501	DISK, DAMPER D170			1				N	
			(C=E01022)								
12	1	128171-81150	SPACER, CLUTCH			1				Z	
			(C=E00120)								
13	1	26013-080142	BOLT, M8X 14			6					
14	1	26106-080402	BOLT, M8X 40 PLATED			8					
14-1	1	26106-080452	BOLT, M8X 45 PLATED			8				S	
			(C=E00120)								
15	1	128374-81310	CLUTCH ASSY, 2.36				1				
16	1	128374-81320	CLUTCH ASSY, I=2.61				1				
17	1	128374-81330	CLUTCH ASSY, I=3.20				1				
18	1	177070-03501	DISK, DAMPER D170				1				
19	1	26013-080142	BOLT, M8X 14				6				

Remarks
*This figure are not illustrated.
(1)Interchangeable by simultaneous replacement with No.7-1.
(2)Interchangeable by simultaneous replacement with No.14-1.
(3)Interchangeable by simultaneous replacement with Fig.63 No.1-1,2-1, 5-1.

N:Old $\overset{\text{Yes}}{\underset{\text{No}}{\leftrightarrow}}$ New, Q:Old $\overset{\text{No}}{\underset{\text{Yes}}{\leftrightarrow}}$ New, R:Old $\overset{\text{Yes}}{\underset{\text{Yes}}{\leftrightarrow}}$ New, S:Old $\overset{\text{No}}{\underset{\text{No}}{\leftrightarrow}}$ New, W:Add, Z:Discontinued, F:Interchangeable by set, K:Q'ty Change

Copyright (C) YANMAR CO., LTD. All RightsReserved.

Fig.61. DUMPER DISK(FOR SAIL DRIVE)

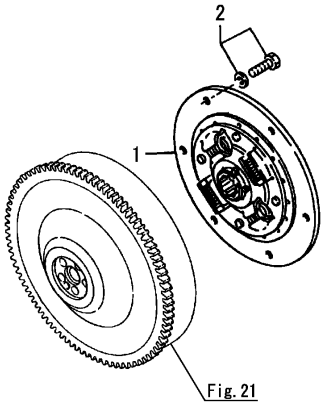

(A)=1GM10(YMI) (D)=1GM10VE
(B)=1GM10C (E)=1GM10L
(C)=1GM10 (F)=

No.	Lev.	Parts No.	Description	Q'ty (A)	(B)	(C)	(D)	(E)	(F)	I	R
1	1	128371-81050	DISK, DAMPER D170		1						
1-1	1	177070-03501	DISK, DAMPER D170		1					N	
		(B=E01018)									
2	1	26013-080142	BOLT, M8X 14		6						

N:Old $\frac{\text{Yes}}{\text{No}}$ New, Q:Old $\frac{\text{No}}{\text{Yes}}$ New, R:Old $\frac{\text{Yes}}{\text{Yes}}$ New, S:Old $\frac{\text{No}}{\text{No}}$ New, W:Add, Z:Discontinued, F:Interchangeable by set, K:Q'ty Change

Copyright (C) YANMAR CO., LTD. All RightsReserved.

Fig.62. TAPER COUPLING(OPTIONAL)

(A)=1GM10(YMI)
(B)=1GM10C
(C)=1GM10
(D)=1GM10VE
(E)=1GM10L
(F)=

1GM10(YMI)
1GM10VE

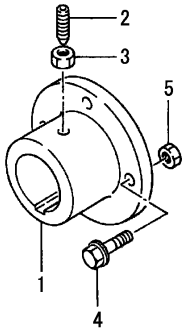

1GM10

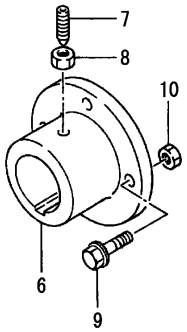

No.	Lev.	Parts No.	Description	Q'ty (A)	(B)	(C)	(D)	(E)	(F)	I	R
1	1	48110-522361	COUPLING, TAPER 22	1			1			Z	
	(A=EXXXXX)		(D=EXXXXX)								
2	1	48110-032411	BOLT, LOCK	1			1			Z	
	(A=EXXXXX)		(D=EXXXXX)								
3	1	26756-080002	NUT, LOCK M8	1			1			Z	
	(A=EXXXXX)		(D=EXXXXX)								
4	1	26106-100322	BOLT, M10X 32 PLATED	4			4			Z	
	(A=EXXXXX)		(D=EXXXXX)								
5	1	26706-100002	NUT, M10	4			4			Z	
	(A=EXXXXX)		(D=EXXXXX)								
6	1	48110-522361	COUPLING, TAPER 22			1					
6-1	1	48110-025063	COUPLING, TAPER 25			1				N	
			(C=E01083)								
7	1	48110-032411	BOLT, LOCK			1					
8	1	26756-080002	NUT, LOCK M8			1					
9	1	26106-100322	BOLT, M10X 32 PLATED			4					
9-1	1	26113-100352	BOLT M10X 35			4				S	
			(C=EXXXXX)								
10	1	26706-100002	NUT, M10			4					
10-1	1	196315-01380	NUT, LOCK M10			4				S	
			(C=EXXXXX)								

N:Old $\xleftrightarrow[\text{No}]{\text{Yes}}$ New, Q:Old $\xleftrightarrow[\text{Yes}]{\text{No}}$ New, R:Old $\xleftrightarrow[\text{Yes}]{\text{Yes}}$ New, S:Old $\xleftrightarrow[\text{No}]{\text{No}}$ New, W:Add, Z:Discontinued, F:Interchangeable by set, K:Q'ty Change

Copyright (C) YANMAR CO., LTD. All RightsReserved.

Fig.63. CLUTCH REMOTE CONTROL

(A)=1GM10(YMI)
(B)=1GM10C
(C)=1GM10
(D)=1GM10VE
(E)=1GM10L
(F)=

1GM10(YMI)

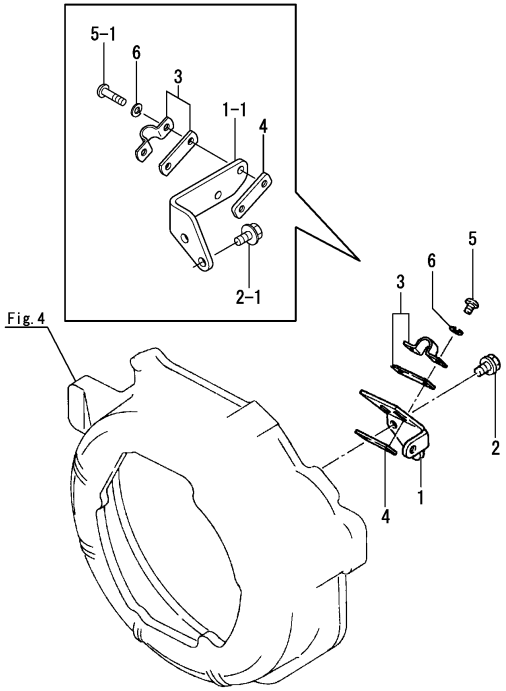

1GM10
1GM10VE

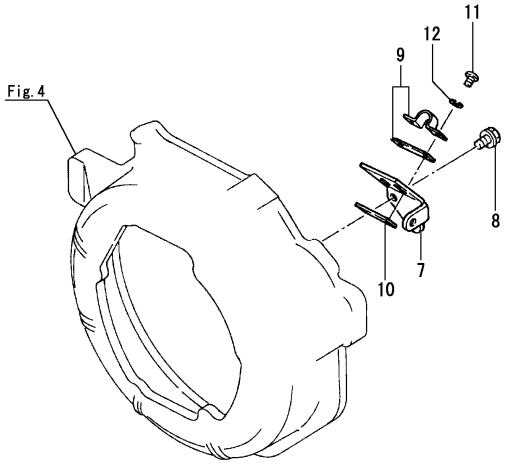

No.	Lev.	Parts No.	Description	Q'ty (A)	(B)	(C)	(D)	(E)	(F)	I	R
1	1	128170-86300	BRACKET, CABLE	1							
1-1	1	128990-86310	BRACKET, CABLE	1						S	1
	(A=E23998)										
2	1	26106-060142	BOLT, M6X 14 PLATED	2							
2-1	1	26106-060122	BOLT, M6X 12 PLATED	2						S	1
	(A=E23998)										
3	1	41710-000410	CLAMP	1							
4	1	121574-86320	RETAINER	1							
5	1	26557-050122	SCREW, M5X12	2							
5-1	1	26557-050202	SCREW, M5X20	2						S	1
	(A=E23998)										
6	1	22212-050000	WASHER 5	2							
7	1	128170-86300	BRACKET, CABLE			1	1				
8	1	26106-060142	BOLT, M6X 14 PLATED			2	2				
9	1	41710-000410	CLAMP			1	1				
10	1	121574-86320	RETAINER			1	1				
11	1	26557-050122	SCREW, M5X12			2	2				
12	1	22212-050000	WASHER 5			2	2				

Remarks
(1)Interchangeable by simultaneous replacement with Fig.60 No.1-4 or 2-4 or 3-4.

N:Old $\frac{\text{Yes}}{\text{No}}$ New, Q:Old $\frac{\text{No}}{\text{Yes}}$ New, R:Old $\frac{\text{Yes}}{\text{Yes}}$ New, S:Old $\frac{\text{No}}{\text{No}}$ New, W:Add, Z:Discontinued, F:Interchangeable by set, K:Q'ty Change

Copyright (C) YANMAR CO., LTD. All RightsReserved.

Fig.64. PANEL(A-TYPE)

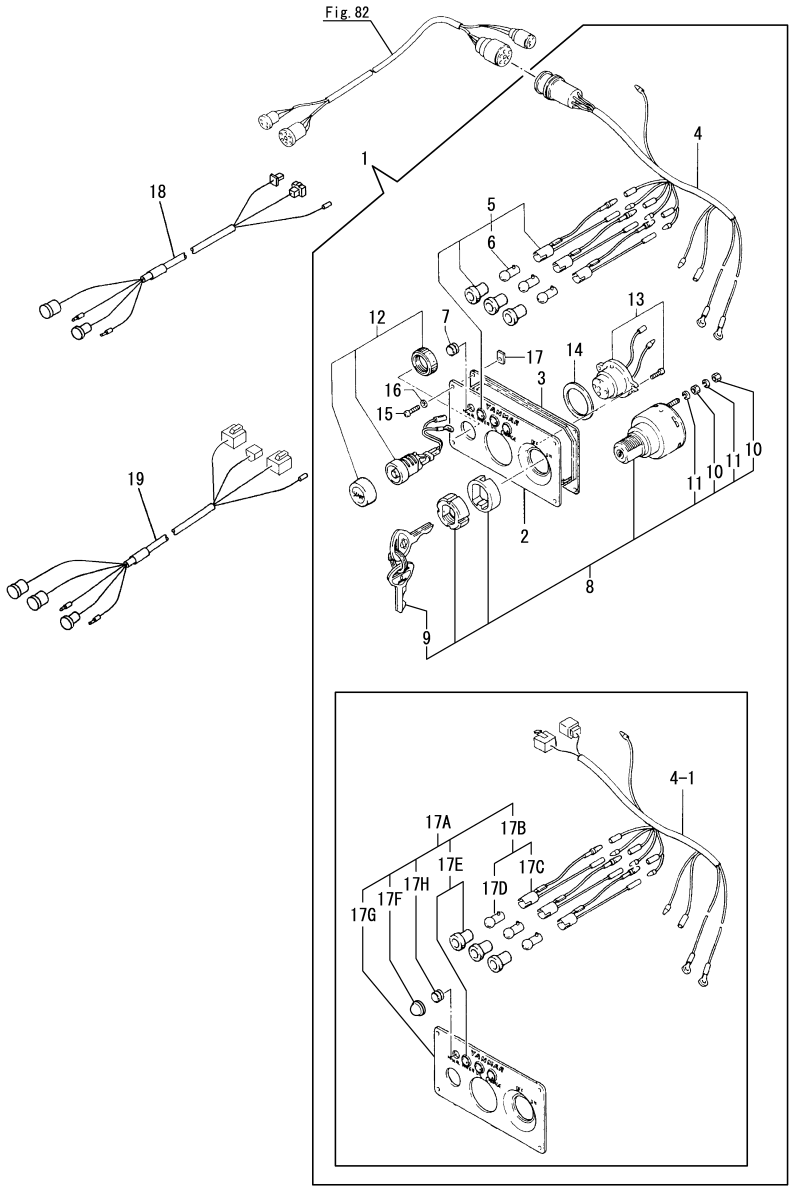

(A)=1GM10(YMI) (D)=1GM10VE
(B)=1GM10C (E)=1GM10L
(C)=1GM10 (F)=

No.	Lev.	Parts No.	Description	Q'ty (A)	(B)	(C)	(D)	(E)	(F)	I	R
1	1	128270-91001	PANEL ASSY	1		1	1	1			
1-1	1	128270-91002	PANEL ASSY	1		1	1	1		F	2
	(A=*2001.07.)		(C=*2001.07.) (D=*2001.07.)	(E=*2001.07.)							
1-2	1	128270-91002	PANEL ASSY	1		1	1	1		Z	3
	(A=*2015.04.)		(C=*2015.04.) (D=*2015.04.)	(E=*2015.04.)							
1-3	1	128270-91003	PANEL ASSY, A	1		1	1	1		N	
	(A=*2015.04.)		(C=*2015.04.) (D=*2015.04.)	(E=*2015.04.)							
2	2	128270-91010	BODY, PANEL	1		1	1	1		Z	
	(A=*2015.04.)		(C=*2015.04.) (D=*2015.04.)	(E=*2015.04.)							
3	2	128270-91020	GASKET, PANEL	1		1	1	1			
4	2	128270-91031	HARNESS, WIRE	1		1	1	1			
4-1	2	128270-91200	HARNESS, WIRE	1		1	1	1		S	
	(A=*2015.04.)		(C=*2015.04.) (D=*2015.04.)	(E=*2015.04.)							
5	2	128270-91040	LAMP, PILOT	3		3	3	3		Z	3
	(A=*2015.04.)		(C=*2015.04.) (D=*2015.04.)	(E=*2015.04.)							
6	3	46150-001110	LAMP, 12V-3W	3		3	3	3		Z	
	(A=*2015.04.)		(C=*2015.04.) (D=*2015.04.)	(E=*2015.04.)							
7	2	128270-91230	COVER	1		1	1	1		Z	
	(A=*2015.04.)		(C=*2015.04.) (D=*2015.04.)	(E=*2015.04.)							
8	2	124070-91250	SWITCH, KEY	1		1	1	1			
9	3	124070-91290	KEY, SWITCH	1		1	1	1			
10	3	26716-050002	NUT, M5	4		4	4	4			
11	3	22217-050000	WASHER, SPRING 5	4		4	4	4			
12	2	124070-91300	SWITCH, PUSH BUTTON	1		1	1	1			
13	2	128270-91350	BUZZER, ALARM	1		1	1	1			
14	2	128270-91360	GASKET, ALARM BUZZER	1		1	1	1			
15	2	128170-91810	SCREW, M5X35	4		4	4	4			
16	2	128170-91820	WASHER, 5	4		4	4	4			
17	2	128170-91830	NUT, PLATE M5	4		4	4	4			
17A	2	128270-91500	VISOR ASSY	1		1	1	1		W	
	(A=*2015.04.)		(C=*2015.04.) (D=*2015.04.)	(E=*2015.04.)							
17B	3	128270-91260	LAMP ASSY,CODE	3		3	3	3		W	
	(A=*2015.04.)		(C=*2015.04.) (D=*2015.04.)	(E=*2015.04.)							
17C	4	128270-91270	CORD ASSY	3		3	3	3		W	
	(A=*2015.04.)		(C=*2015.04.) (D=*2015.04.)	(E=*2015.04.)							
17D	4	128270-91280	LAMP	3		3	3	3		W	
	(A=*2015.04.)		(C=*2015.04.) (D=*2015.04.)	(E=*2015.04.)							
17E	3	128270-91340	LENS ASSY	3		3	3	3		W	
	(A=*2015.04.)		(C=*2015.04.) (D=*2015.04.)	(E=*2015.04.)							
17F	3	128270-91400	LENS ASSY,DUMMY	1		1	1	1		W	
	(A=*2015.04.)		(C=*2015.04.) (D=*2015.04.)	(E=*2015.04.)							
17G	3	128270-91600	VISOR	1		1	1	1		W	
	(A=*2015.04.)		(C=*2015.04.) (D=*2015.04.)	(E=*2015.04.)							
17H	3	128270-91800	SOCKET,RUBBER	1		1	1	1		W	
	(A=*2015.04.)		(C=*2015.04.) (D=*2015.04.)	(E=*2015.04.)							
18	1	128391-77860	HARNESS,ADAPTER B/12	1		1	1	1		W	1
	(A=E12169)		(C=E01141) (D=*1992.12.)	(E=E00529)							
19	1	129574-77850	HARNESS,ADAPTER A-12	1		1	1	1		W	2
	(A=*2001.07.)		(C=*2001.07.) (D=*2001.07.)	(E=*2001.07.)							

Remarks
(1)For No.1 (Not used for No.1-1).
(2)No.1-1 & 19 interchangeable by set.
(3)These items are no longer available.
No.17A is a substitue parts.

N:Old $\overset{\text{Yes}}{\underset{\text{No}}{\leftrightarrow}}$ New, Q:Old $\overset{\text{No}}{\underset{\text{Yes}}{\leftrightarrow}}$ New, R:Old $\overset{\text{Yes}}{\underset{\text{Yes}}{\leftrightarrow}}$ New, S:Old $\overset{\text{No}}{\underset{\text{No}}{\leftrightarrow}}$ New, W:Add, Z:Discontinued, F:Interchangeable by set, K:Q'ty Change

Copyright (C) YANMAR CO., LTD. All RightsReserved.

Fig.65. TOOL

(A)=1GM10(YMI)
(B)=1GM10C
(C)=1GM10
(D)=1GM10VE
(E)=1GM10L
(F)=

1GM10(YMI)
1GM10C

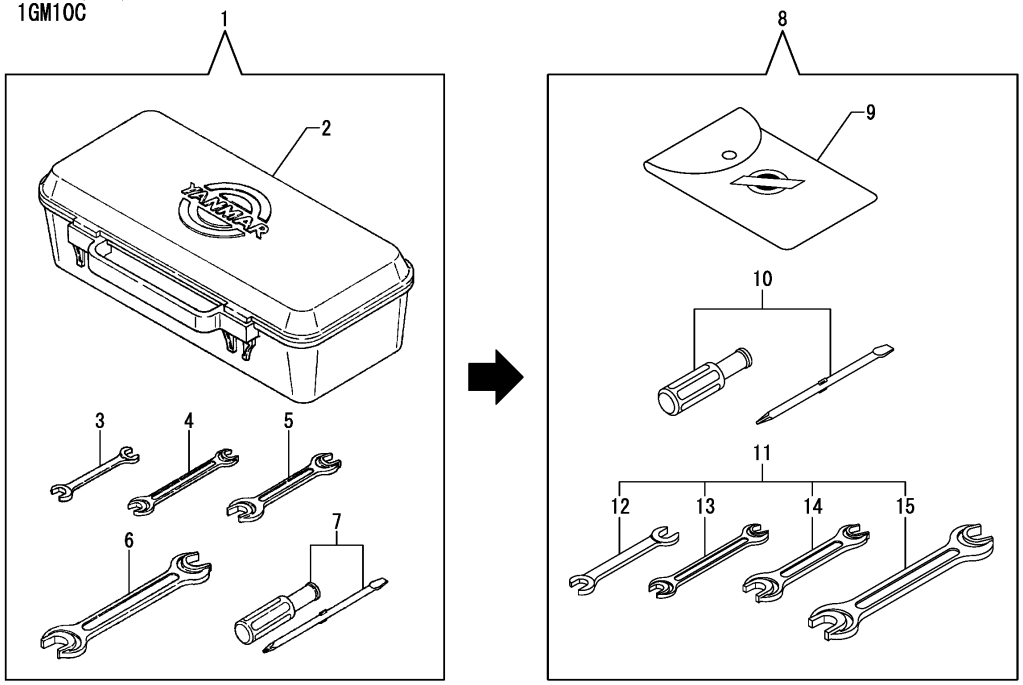

1GM10
1GM10VE
1GM10L

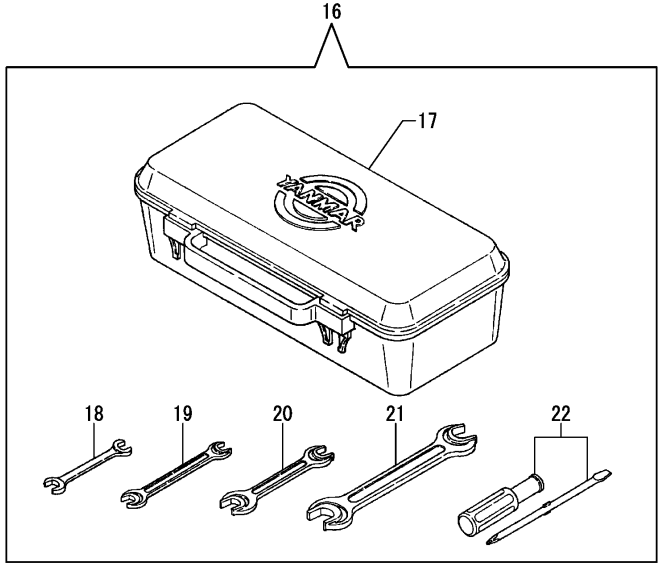

No.	Lev.	Parts No.	Description	Q'ty (A)	(B)	(C)	(D)	(E)	(F)	I	R
1	1	724772-92100	BOX ASSY, TOOL	1	1					Z	
	(A=E23998)	(B=E04164)									
2	2	104200-92600	BOX, SPARE PARTS	1	1					Z	
	(A=E23998)	(B=E04164)									
3	2	28110-100130	SPANNER, 10X13	1	1					Z	
	(A=E23998)	(B=E04164)									
4	2	28110-120140	SPANNER, 12X14	1	1					Z	
	(A=E23998)	(B=E04164)									
5	2	28110-170190	SPANNER, 17X19	1	1					Z	
	(A=E23998)	(B=E04164)									
6	2	28110-220240	SPANNER, 22X24	1	1					Z	
	(A=E23998)	(B=E04164)									
7	2	104200-92350	DRIVER, SCREW	1	1					Z	
	(A=E23998)	(B=E04164)									
8	1	129270-92100	TOOL ASSY	1	1					W	
	(A=E23998)	(B=E04164)									
8-1	1	129270-92100	TOOL ASSY	1	1					Z	
	(A=EXXXXX)	(B=EXXXXX)									
9	2	129270-92600	BAG, TOOL	1	1					W	
	(A=E23998)	(B=E04164)									
9-1	2	129270-92600	BAG, TOOL	1	1					Z	
	(A=EXXXXX)	(B=EXXXXX)									
10	2	129270-92650	DRIVER	1	1					W	
	(A=E23998)	(B=E04164)									
10-1	2	129270-92650	DRIVER	1	1					Z	
	(A=EXXXXX)	(B=EXXXXX)									
11	2	129270-92690	WRENCH ASSY	1	1					W	
	(A=E23998)	(B=E04164)									
11-1	2	129270-92690	WRENCH ASSY	1	1					Z	
	(A=EXXXXX)	(B=EXXXXX)									
12	3	129270-92610	WRENCH, 10X13	1	1					W	
	(A=E23998)	(B=E04164)									
12-1	3	129270-92610	WRENCH, 10X13	1	1					Z	
	(A=EXXXXX)	(B=EXXXXX)									
13	3	129270-92620	WRENCH, 12X14	1	1					W	
	(A=E23998)	(B=E04164)									
13-1	3	129270-92620	WRENCH, 12X14	1	1					Z	
	(A=EXXXXX)	(B=EXXXXX)									
14	3	129270-92630	WRENCH, 17X19	1	1					W	
	(A=E23998)	(B=E04164)									
14-1	3	129270-92630	WRENCH, 17X19	1	1					Z	
	(A=EXXXXX)	(B=EXXXXX)									
15	3	129270-92640	WRENCH, 22X24	1	1					W	
	(A=E23998)	(B=E04164)									
15-1	3	129270-92640	WRENCH, 22X24	1	1					Z	
	(A=EXXXXX)	(B=EXXXXX)									
16	1	724772-92100	BOX ASSY, TOOL			1	1	1			
17	2	104200-92600	BOX, SPARE PARTS			1	1	1			
18	2	28110-100130	SPANNER, 10X13			1	1	1			
19	2	28110-120140	SPANNER, 12X14			1	1	1			
20	2	28110-170190	SPANNER, 17X19			1	1	1			

N:Old $\xleftarrow[\text{No}]{\text{Yes}}$ New, Q:Old $\xleftarrow[\text{Yes}]{\text{No}}$ New, R:Old $\xleftarrow[\text{Yes}]{\text{Yes}}$ New, S:Old $\xleftarrow[\text{No}]{\text{No}}$ New, W:Add, Z:Discontinued, F:Interchangeable by set, K:Q'ty Change

++ CONTINUE ++

Copyright (C) YANMAR CO., LTD. All RightsReserved.

Fig.65. TOOL

(A)=1GM10(YMI)
(B)=1GM10C
(C)=1GM10
(D)=1GM10VE
(E)=1GM10L
(F)=

1GM10(YMI)
1GM10C

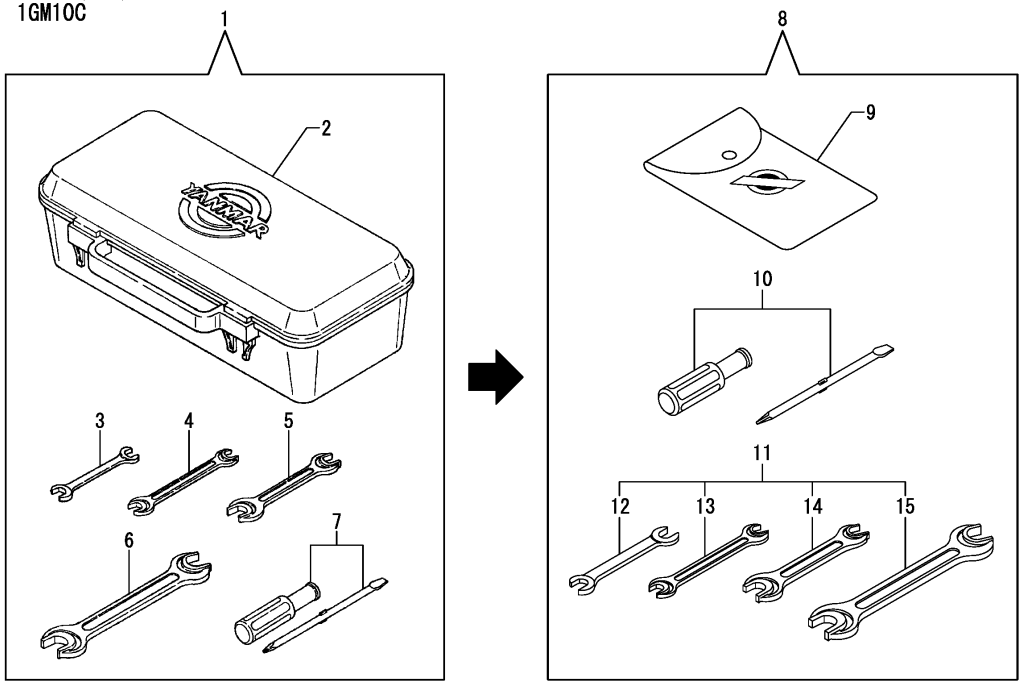

1GM10
1GM10VE
1GM10L

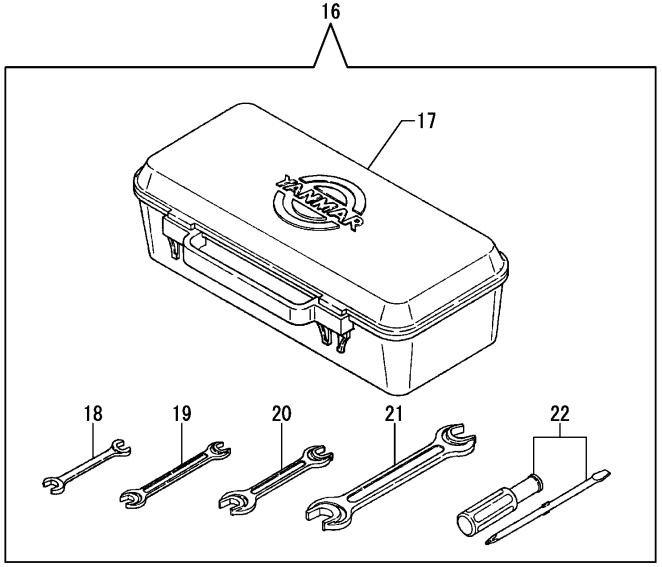

No.	Lev.	Parts No.	Description	Q'ty (A)	(B)	(C)	(D)	(E)	(F)	I	R
21	2	28110-220240	SPANNER, 22X24			1	1	1			
22	2	104200-92350	DRIVER, SCREW			1	1	1			

N:Old ◄Yes/No► New, Q:Old ◄No/Yes► New, R:Old ◄Yes/Yes► New, S:Old ◄No/No► New, W:Add, Z:Discontinued, F:Interchangeable by set, K:Q'ty Change

Copyright (C) YANMAR CO., LTD. All RightsReserved.

Fig.66. STARTING MOTOR COMPONENT PARTS

(A)=1GM10(YMI)
(B)=1GM10C
(C)=1GM10
(D)=1GM10VE
(E)=1GM10L
(F)=

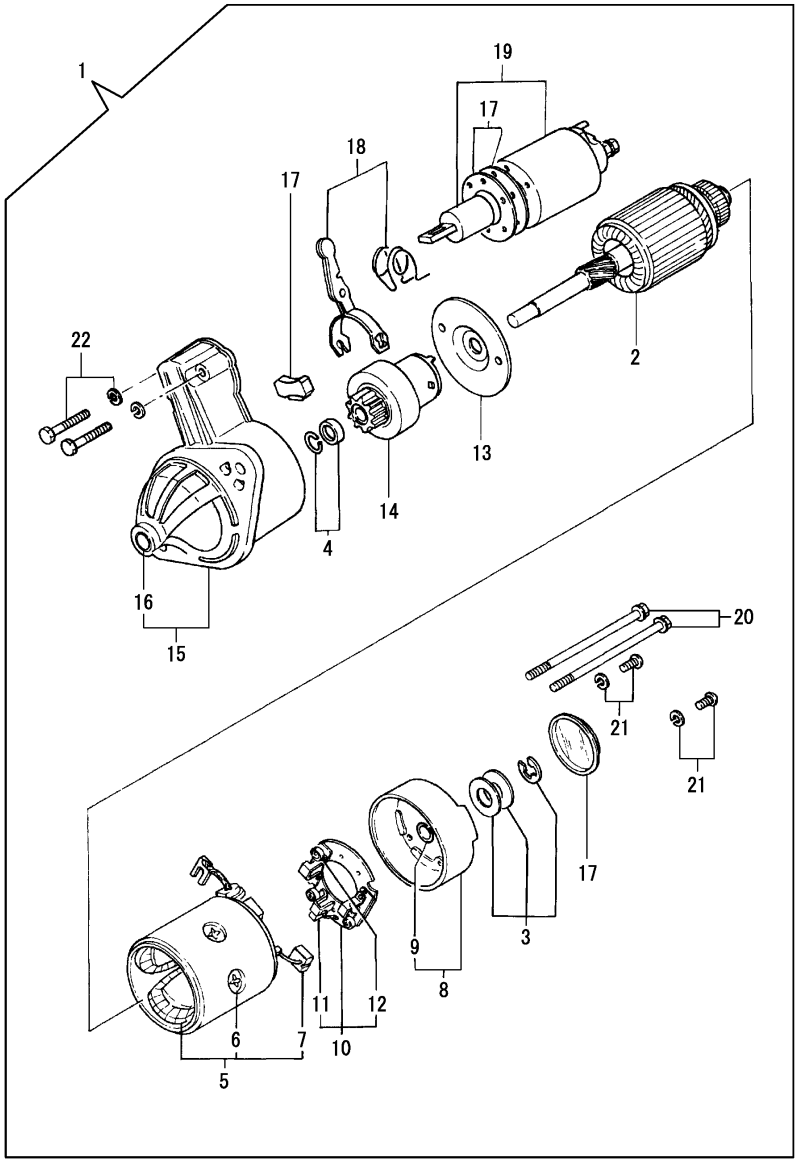

No.	Lev.	Parts No.	Description	Q'ty (A)	(B)	(C)	(D)	(E)	(F)	I	R
1	1	128170-77010	STARTER, S114-303	1	1	1	1				
2	2	X211451005	ARMATURE	1	1	1	1				
3	2	X21148110	WASHER SET, THRUST	1	1	1	1				
4	2	X21147155	STOPPER SET, PINION	1	1	1	1				
5	2	X211462101	COIL, FIELD	1	1	1	1				
6	3	X21143215	SCREW, CORE	4	4	4	4				
7	3	X21145312	BRUSH, +	2	2	2	2				
8	2	X211413005	COVER ASSY	1	1	1	1				
9	3	X21145352	METAL	1	1	1	1				
10	2	X211433101	HOLDER	1	1	1	1				
11	3	X21148313	BRUSH (-)	1	1	1	1				
12	3	X21144314	SPRING, BRUSH	3	3	3	3				
13	2	X21144454	PLATE	1	1	1	1				
14	2	X211415006	PINION	1	1	1	1				
15	2	X211476503	CASE ASSY	1	1	1	1				
16	3	X21144661	METAL, GEAR CASE	1	1	1	1				
17	2	X21146963	COVER SET, DUST	1	1	1	1				
18	2	X21149652	LEVER SET, SHIFT	1	1	1	1				
19	2	X211447009	SWITCH	1	1	1	1				
20	2	X21148852	BOLT, THROUGH	2	2	2	2				
21	2	X21142835	SCREW SET	2	2	2	2				
22	2	26013-060322	BOLT, M6X 32	2	2	2	2				

N:Old $\xleftarrow[\text{No}]{\text{Yes}}$ New, Q:Old $\xleftarrow[\text{Yes}]{\text{No}}$ New, R:Old $\xleftarrow[\text{Yes}]{\text{Yes}}$ New, S:Old $\xleftarrow[\text{No}]{\text{No}}$ New, W:Add, Z:Discontinued, F:Interchangeable by set, K:Q'ty Change

Copyright (C) YANMAR CO., LTD. All RightsReserved.

Fig.67. STARTING MOTOR COMPONENT PARTS

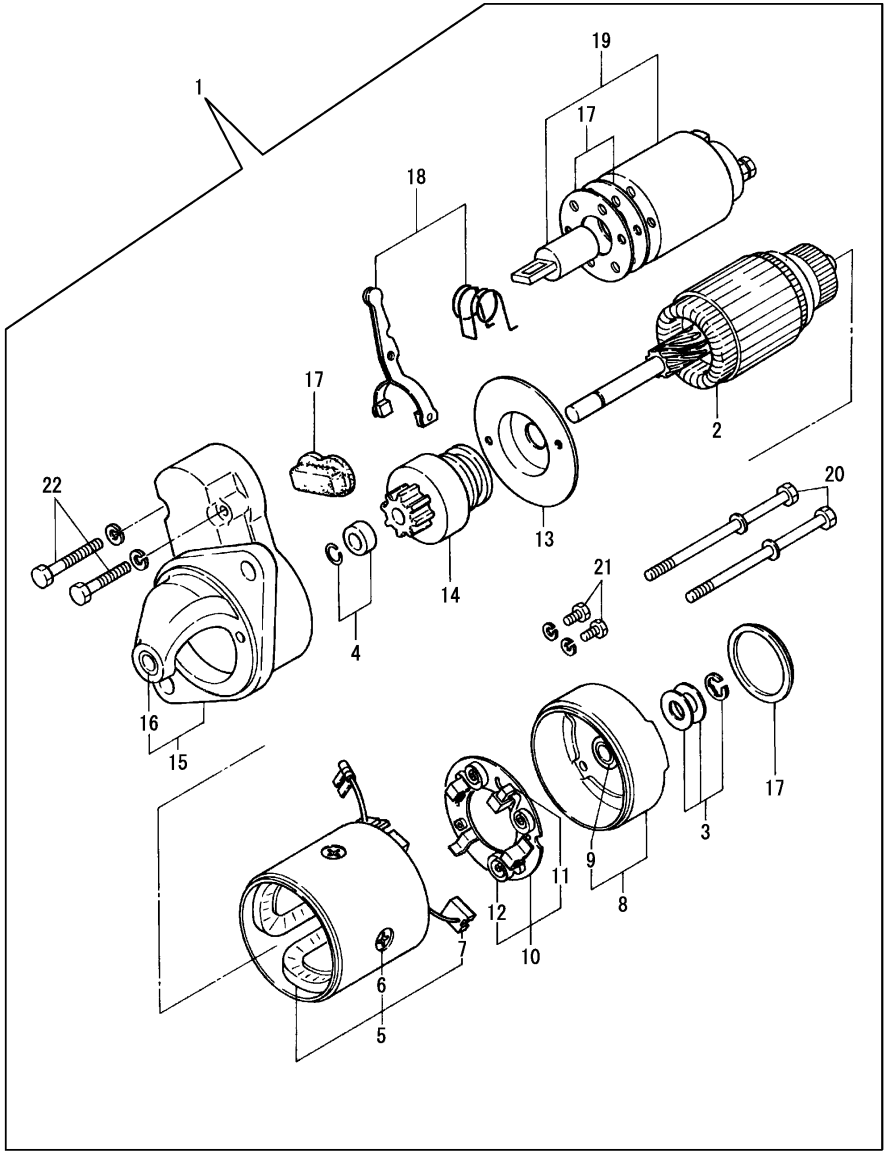

(A)=1GM10(YMI) (D)=1GM10VE
(B)=1GM10C (E)=1GM10L
(C)=1GM10 (F)=

No.	Lev.	Parts No.	Description	Q'ty (A)	(B)	(C)	(D)	(E)	(F)	I	R
1	1	124772-77020	STARTER, S114-244					1			
2	2	X211491001	ARMATURE ASSY					1			
3	2	X21148110	WASHER SET, THRUST					1			
4	2	X21147155	STOPPER SET, PINION					1			
5	2	X211482001	COIL ASSY, FIELD					1			
6	3	X21147215	SCREW, POLE CORE					4			
7	3	X21145312	BRUSH, +					2			
8	2	X211423001	COVER ASSY, REAR					1			
9	3	X21145352	METAL					1			
10	2	X211443101	HOLDER ASSY, BRUSH					1			
11	3	X21148313	BRUSH (-)					2			
11-1	3	X21148313	BRUSH (-)					1		K	
				(E=FROM 1ST)							
12	3	X21144314	SPRING, BRUSH					4			
12-1	3	X21144314	SPRING, BRUSH					3		K	
				(E=FROM 1ST)							
13	2	X21143454	PLATE, CENTER					1			
14	2	X211445002	PINION ASSY					1			
15	2	X211486003	CASE ASSY, GEAR					1			
16	3	X21144661	METAL, GEAR CASE					1			
17	2	X21143963	COVER KIT, DUCT					1			
18	2	X21148652	LEVER SET, SHIFT					1			
19	2	X211447006	SWITCH, SUB					1			
20	2	X21146815	BOLT, THROUGH					2			
21	2	X21142835	SCREW SET					2			
22	2	X7120632	BOLT, M6X 32					2			

N:Old $\frac{\text{Yes}}{\text{No}}$ New, Q:Old $\frac{\text{No}}{\text{Yes}}$ New, R:Old $\frac{\text{Yes}}{\text{Yes}}$ New, S:Old $\frac{\text{No}}{\text{No}}$ New, W:Add, Z:Discontinued, F:Interchangeable by set, K:Q'ty Change

Copyright (C) YANMAR CO., LTD. All RightsReserved.

Fig.68. GENERATOR COMPONENT PARTS(HITA

(A)=1GM10(YMI) (D)=1GM10VE
(B)=1GM10C (E)=1GM10L
(C)=1GM10 (F)=

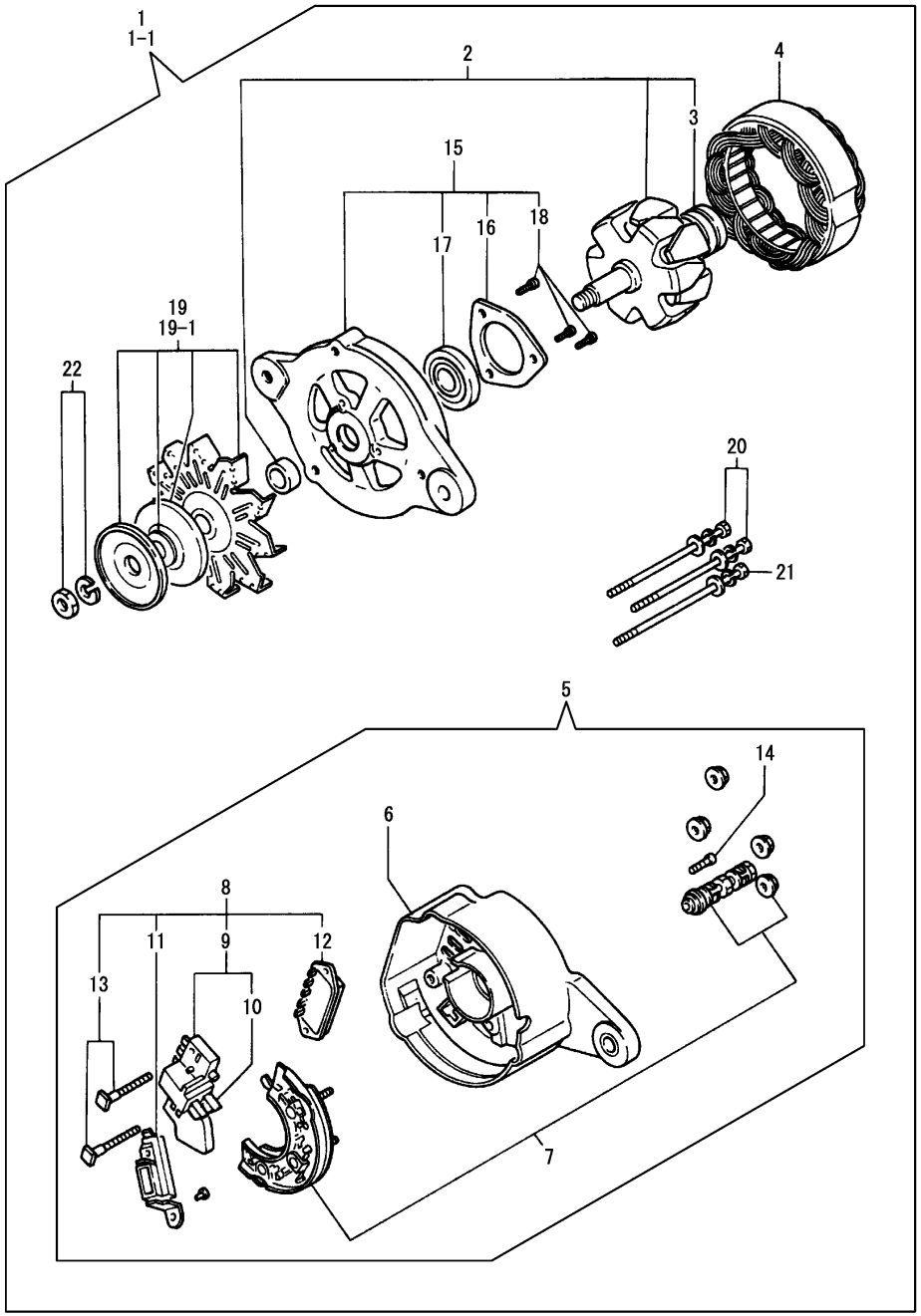

No.	Lev.	Parts No.	Description	Q'ty (A)	(B)	(C)	(D)	(E)	(F)	I	R
1	1	128270-77200	GENERATOR, LR135-105	1	1	1		1			
1-1	1	128171-77200	GENERATOR, LR135-126	1	1	1	1	1		S	
	(A=E03691)	(B=E00341)	(C=E00336)	(E=E00218)							
2	2	XL13561001	ROTOR	1	1	1	1	1			
3	3	X6201SD	BALL BEARING	1	1	1	1	1			
4	2	XL13542001	STATOR ASSY	1	1	1	1	1			
5	2	XL13563003	COVER ASSY	1	1	1	1	1			
6	3	XL1358301	COVER	1	1	1	1	1			
7	3	XL1353320	DIODE ASSY	1	1	1	1	1			
8	3	XL13513152	REGULATOR, BRUSH	1	1	1	1	1			
9	4	XL1354326	BRUSH, CARBON	1	1	1	1	1			
10	5	XL12013262	BRUSH	2	2	2	2	2			
11	4	XL1352318	CONDENSER ASSY	1	1	1	1	1			
12	4	XTR1Z63	REGULATOR	1	1	1	1	1			
13	4	XL13513134	BOLT M5	2	2	2	2	2			
14	3	26557-050142	SCREW M 5X 14	1	1	1	1	1			
15	2	XL1359400	COVER	1	1	1	1	1			
16	3	XL13514042	RETAINER	1	1	1	1	1			
17	3	X6302BM	BEARING, BALL	1	1	1	1	1			
18	3	26557-040122	SCREW, M4X12	3	3	3	3	3			
19	2	XL13525001	PULLEY ASSY	1	1	1		1			
19-1	2	XL13595003	PULLEY ASSY	1	1	1	1	1		S	
	(A=E03691)	(B=E00341)	(C=E00336)	(E=E00218)							
20	2	XL1254801	BOLT, THROUGH	2	2	2	2	2			
21	2	XL1255801	BOLT, THROUGH	1	1	1	1	1			
22	2	XB495469B	NUT ASSY, PULLEY	1	1	1	1	1			

N:Old $\overset{\text{Yes}}{\underset{\text{No}}{\leftrightarrow}}$ New, Q:Old $\overset{\text{No}}{\underset{\text{Yes}}{\leftrightarrow}}$ New, R:Old $\overset{\text{Yes}}{\underset{\text{Yes}}{\leftrightarrow}}$ New, S:Old $\overset{\text{No}}{\underset{\text{No}}{\leftrightarrow}}$ New, W:Add, Z:Discontinued, F:Interchangeable by set, K:Q'ty Change

Copyright (C) YANMAR CO., LTD. All RightsReserved.

Fig.69. LUB.OIL WASTE PUMP(OPTIONAL)

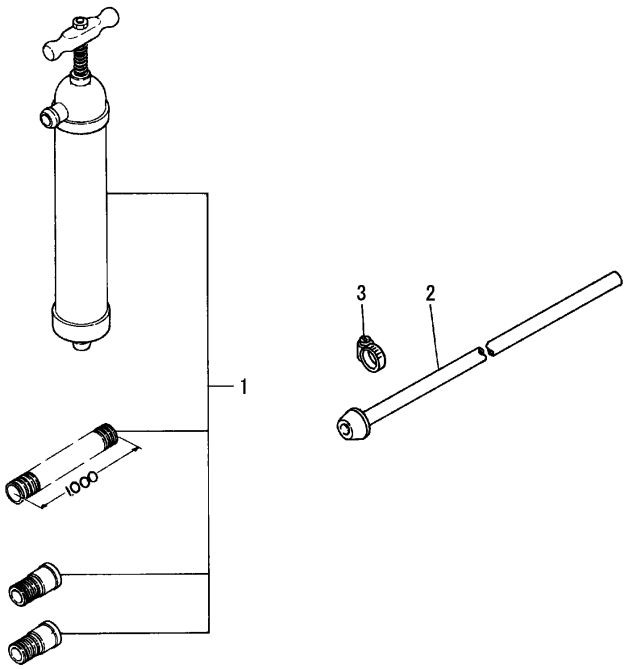

(A)=1GM10(YMI) (D)=1GM10VE
(B)=1GM10C (E)=1GM10L
(C)=1GM10 (F)=

No.	Lev.	Parts No.	Description	Q'ty (A)	(B)	(C)	(D)	(E)	(F)	I	R
1	1	28210-000080	PUMP	1	1	1	1	1			
1-1	1	28210-000080	PUMP	1	1					Z	
	(A=EXXXXX)	(B=EXXXXX)									
2	1	128275-39710	PIPE, OIL	1	1	1	1	1			
2-1	1	128275-39710	PIPE, OIL	1	1					Z	
	(A=EXXXXX)	(B=EXXXXX)									
3	1	23080-018000	CLAMP, 18	3	3	3	3	3			
3-1	1	23080-018000	CLAMP, 18	3	3					Z	
	(A=EXXXXX)	(B=EXXXXX)									

N:Old $\xleftarrow[\text{No}]{\text{Yes}}$ New, Q:Old $\xleftarrow[\text{Yes}]{\text{No}}$ New, R:Old $\xleftarrow[\text{Yes}]{\text{Yes}}$ New, S:Old $\xleftarrow[\text{No}]{\text{No}}$ New, W:Add, Z:Discontinued, F:Interchangeable by set, K:Q'ty Change

Copyright (C) YANMAR CO., LTD. All RightsReserved.

Fig.70. BILGE PUMP(OPTIONAL)(UP TO JUL

(A)=1GM10(YMI) (D)=1GM10VE
(B)=1GM10C (E)=1GM10L
(C)=1GM10 (F)=

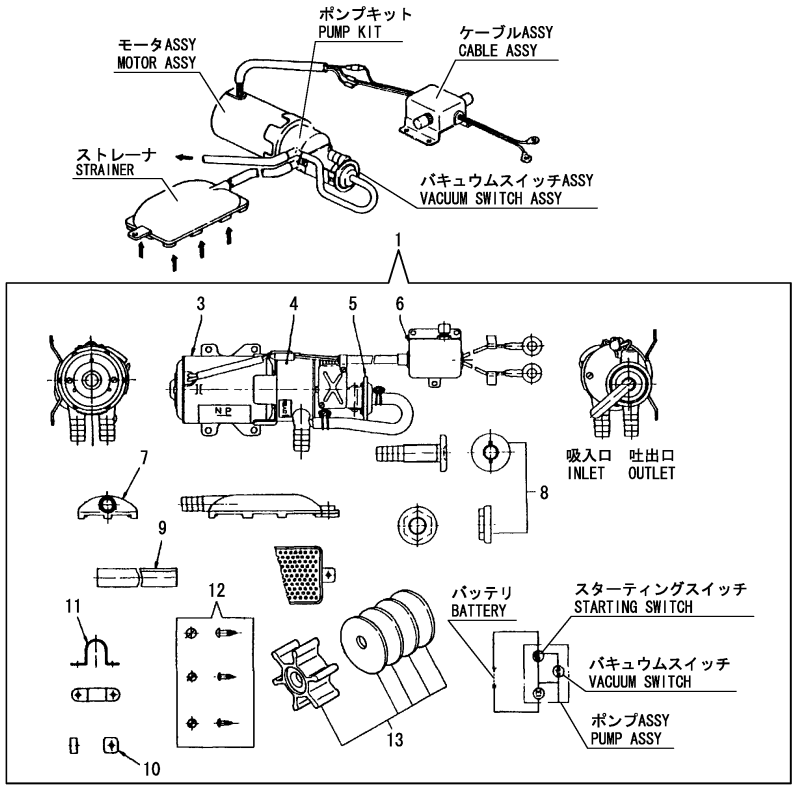

No.	Lev.	Parts No.	Description	Q'ty (A)	(B)	(C)	(D)	(E)	(F)	I	R
1	1	977782-00122	PUMP(12V), BILGE	1	1	1	1	1			
1-1	1	977782-00122	PUMP(12V), BILGE	1	1	1				Z	1
	(A=EXXXXX)	(B=EXXXXX)	(C=EXXXXX)								
3	2	XBP1902200	MOTER ASSY	1	1	1	1	1			
4	2	XBP1901300	PUMP SET	1	1	1	1	1			
5	2	XBP1902400	SWITCH ASSY, VACUUM	1	1	1	1	1			
6	2	XBP1905500	CABLE ASSY	1	1	1	1	1			
7	2	XBP1902810	STRAINER	1	1	1	1	1			
8	2	XBP1901820	OUTLET	1	1	1	1	1			
9	2	XBP1901830	HOSE	1	1	1	1	1			
10	2	XBP1901910	SPACER	1	1	1	1	1			
11	2	XBP1901920	CLAMP	1	1	1	1	1			
12	2	XBP1901950	SCREW SET	1	1	1	1	1			
13	2	947859-20010	IMPELLER	1	1	1	1	1			

Remarks
(1)Change over the maker from
HITACHI to SAWAFUJI.
Interchangeability is <R>
with Fig.70A No.1.

N:Old $\xleftrightarrow[\text{No}]{\text{Yes}}$ New, Q:Old $\xleftrightarrow[\text{Yes}]{\text{No}}$ New, R:Old $\xleftrightarrow[\text{Yes}]{\text{Yes}}$ New, S:Old $\xleftrightarrow[\text{No}]{\text{No}}$ New, W:Add, Z:Discontinued, F:Interchangeable by set, K:Q'ty Change

Copyright (C) YANMAR CO., LTD. All RightsReserved.

Fig.71. FUEL TANK(OPTIONAL)

(A)=1GM10(YMI) (D)=1GM10VE
(B)=1GM10C (E)=1GM10L
(C)=1GM10 (F)=

No.	Lev.	Parts No.	Description	Q'ty (A)	(B)	(C)	(D)	(E)	(F)	I	R
1	1	83213-003012	TANK ASSY, FUEL OIL	1	1	1	1	1			
1A	2	105430-55041	CAP ASSY, FUEL TANK	1	1	1	1	1			
2	1	124070-59060	PIPE ASSY, FUEL 2M	1	1	1	1	1			
2-1	1	128990-59700	PIPE ASSY, FUEL	1	1	1				N	
	(A=EXXXXX)	(B=EXXXXX)	(C=EXXXXX)								
3	2	124070-59130	PIPE, FUEL 2M	1	1	1	1	1			
3-1	2	128990-59131	PIPE, FUEL	1	1	1				N	
	(A=EXXXXX)	(B=EXXXXX)	(C=EXXXXX)								
6	2	138603-59380	NUT, CAP	1	1	1	1	1			
7	2	23010-014000	CLAMP, 14	2	2	2	2	2			

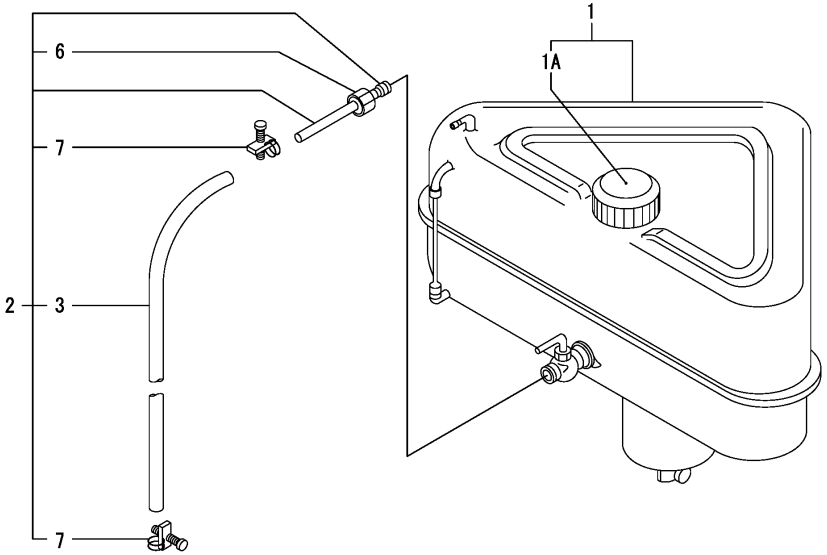

N:Old $\xleftarrow[\text{No}]{\text{Yes}}$ New, Q:Old $\xleftarrow[\text{Yes}]{\text{No}}$ New, R:Old $\xleftarrow[\text{Yes}]{\text{Yes}}$ New, S:Old $\xleftarrow[\text{No}]{\text{No}}$ New, W:Add, Z:Discontinued, F:Interchangeable by set, K:Q'ty Change

Copyright (C) YANMAR CO., LTD. All RightsReserved.

Fig.72. ENGINE STOP CABLE(OPTIONAL)

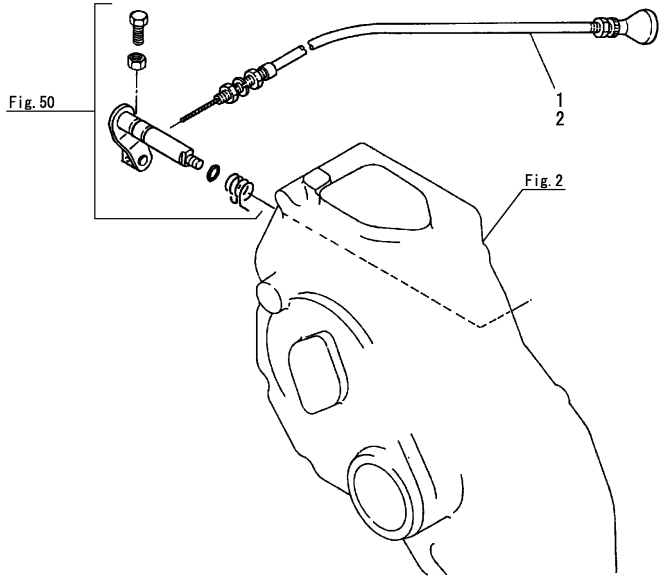

Remarks
(1)3m
(2)7m

(A)=1GM10(YMI) (D)=1GM10VE
(B)=1GM10C (E)=1GM10L
(C)=1GM10 (F)=

No.	Lev.	Parts No.	Description	Q'ty (A)	(B)	(C)	(D)	(E)	(F)	I	R
1	1	104271-67550	CABLE, STOP L=3000	1	1	1	1	1			1
2	1	129470-67560	CABLE, STOP L=7000	1	1	1	1			W	2
	(A=EXXXXX)	(B=EXXXXX)	(C=EXXXXX)								

N:Old $\xleftrightarrow[\text{No}]{\text{Yes}}$ New, Q:Old $\xleftrightarrow[\text{Yes}]{\text{No}}$ New, R:Old $\xleftrightarrow[\text{Yes}]{\text{Yes}}$ New, S:Old $\xleftrightarrow[\text{No}]{\text{No}}$ New, W:Add, Z:Discontinued, F:Interchangeable by set, K:Q'ty Change

Copyright (C) YANMAR CO., LTD. All RightsReserved.

Fig.73. COUPLING(OPTIONAL)

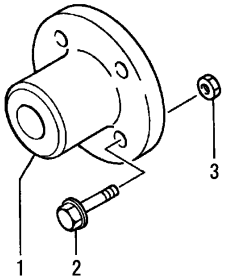

(A)=1GM10(YMI) (D)=1GM10VE
(B)=1GM10C (E)=1GM10L
(C)=1GM10 (F)=

No.	Lev.	Parts No.	Description	Q'ty (A)	(B)	(C)	(D)	(E)	(F)	I	R
1	1	105583-85900	COUPLING, 22	1			1				
1-1	1 (A=EXXXXX)	105583-85900	COUPLING, 22	1						Z	
2	1	26106-100322	BOLT, M10X 32 PLATED	4			4				
2-1	1 (A=EXXXXX)	26106-100322	BOLT, M10X 32 PLATED	4						Z	
3	1	26706-100002	NUT, M10	4			4				
3-1	1 (A=EXXXXX)	26706-100002	NUT, M10	4						Z	

N:Old $\xleftrightarrow[\text{No}]{\text{Yes}}$ New, Q:Old $\xleftrightarrow[\text{Yes}]{\text{No}}$ New, R:Old $\xleftrightarrow[\text{Yes}]{\text{Yes}}$ New, S:Old $\xleftrightarrow[\text{No}]{\text{No}}$ New, W:Add, Z:Discontinued, F:Interchangeable by set, K:Q'ty Change

Copyright (C) YANMAR CO., LTD. All RightsReserved.

Fig.74. STRAIGHT COUPLING(OPTIONAL)

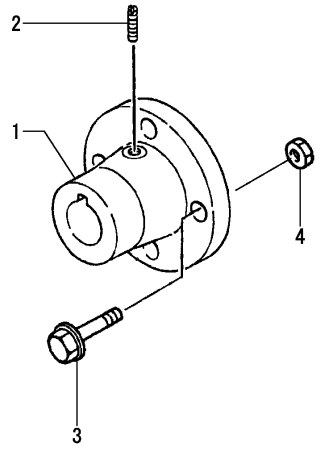

(A)=1GM10(YMI)
(B)=1GM10C
(C)=1GM10
(D)=1GM10VE
(E)=1GM10L
(F)=

No.	Lev.	Parts No.	Description	Q'ty (A)	(B)	(C)	(D)	(E)	(F)	I	R
1	1	45414-500260	COUPLING, 16	1			1				
1-1	1	45414-500260	COUPLING, 16	1						Z	
	(A=EXXXXX)										
2	1	48110-032411	BOLT, LOCK	1			1				
2-1	1	48110-032411	BOLT, LOCK	1						Z	
	(A=EXXXXX)										
3	1	26106-100322	BOLT, M10X 32 PLATED	4			4				
3-1	1	26106-100322	BOLT, M10X 32 PLATED	4						Z	
	(A=EXXXXX)										
4	1	26706-100002	NUT, M10	4			4				
4-1	1	26706-100002	NUT, M10	4						Z	
	(A=EXXXXX)										

N:Old $\xleftrightarrow[\text{No}]{\text{Yes}}$ New, Q:Old $\xleftrightarrow[\text{Yes}]{\text{No}}$ New, R:Old $\xleftrightarrow[\text{Yes}]{\text{Yes}}$ New, S:Old $\xleftrightarrow[\text{No}]{\text{No}}$ New, W:Add, Z:Discontinued, F:Interchangeable by set, K:Q'ty Change

Copyright (C) YANMAR CO., LTD. All RightsReserved.

Fig.75. SLIT COUPLING(OPTIONAL)

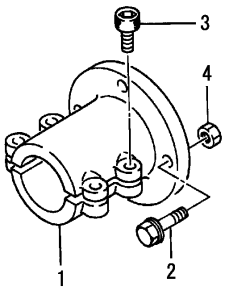

(A)=1GM10(YMI)
(B)=1GM10C
(C)=1GM10
(D)=1GM10VE
(E)=1GM10L
(F)=

No.	Lev.	Parts No.	Description	Q'ty (A)	(B)	(C)	(D)	(E)	(F)	I	R
1	1	104214-83980	COUPLING, SLIT 20	1		1	1				
1-1	1 (A=EXXXXX)	104214-83980	COUPLING, SLIT 20	1						Z	
2	1	26106-100322	BOLT, M10X 32 PLATED	4		4	4				
2-1	1 (A=EXXXXX)	26106-100322	BOLT, M10X 32 PLATED	4						Z	
3	1	26450-080282	BOLT, M8X 28	4		4	4				
3-1	1 (A=EXXXXX)	26450-080282	BOLT, M8X 28	4						Z	
4	1	26706-100002	NUT, M10	4		4	4				
4-1	1 (A=EXXXXX)	26706-100002	NUT, M10	4						Z	

N:Old $\xleftrightarrow[\text{No}]{\text{Yes}}$ New, Q:Old $\xleftrightarrow[\text{Yes}]{\text{No}}$ New, R:Old $\xleftrightarrow[\text{Yes}]{\text{Yes}}$ New, S:Old $\xleftrightarrow[\text{No}]{\text{No}}$ New, W:Add, Z:Discontinued, F:Interchangeable by set, K:Q'ty Change

Copyright (C) YANMAR CO., LTD. All RightsReserved.

Fig.76. SINGLE LEVER CONTROL(OPTIONAL)

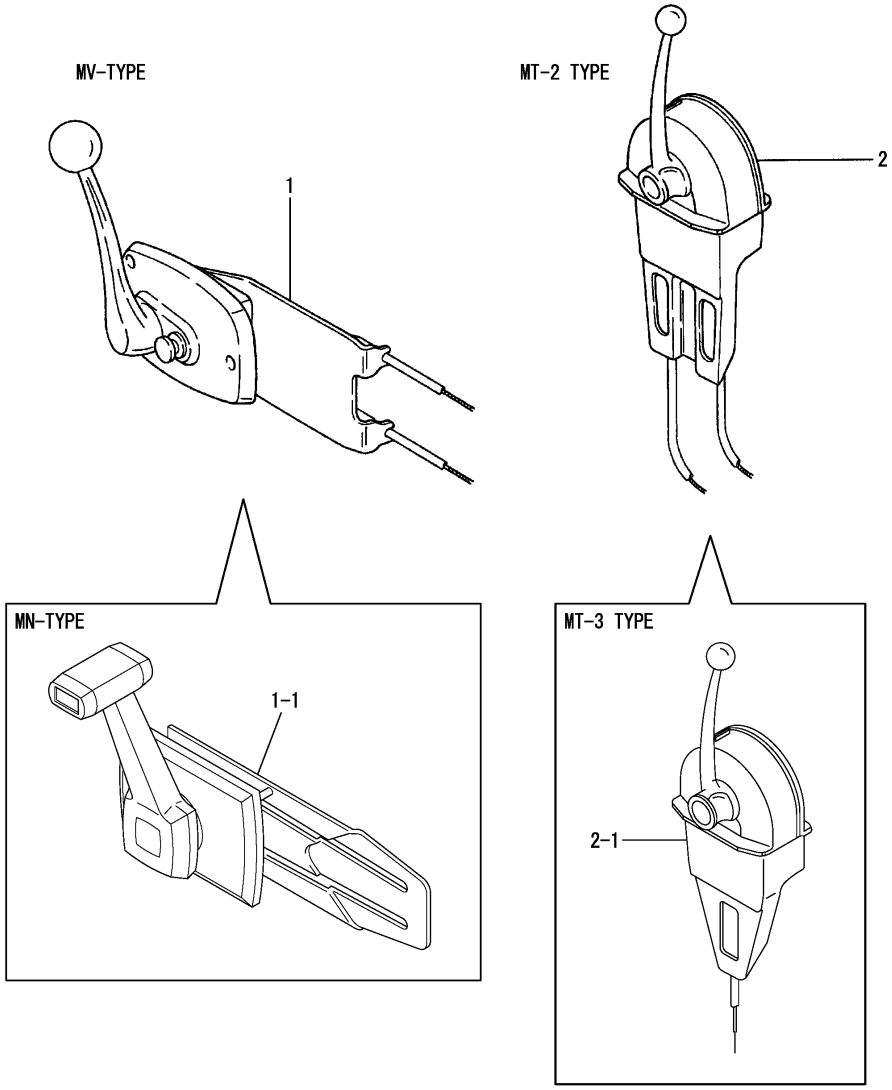

(A)=1GM10(YMI) (D)=1GM10VE
(B)=1GM10C (E)=1GM10L
(C)=1GM10 (F)=

No.	Lev.	Parts No.	Description	Q'ty (A)	(B)	(C)	(D)	(E)	(F)	I	R
1	1	128170-86500	CONTROLLER	1	1	1	1				
1-1	1	128170-86501	REMOCON HEAD (MN	1	1	1	1			S	
	(A=EZZZZZ)	(B=EZZZZZ)	(C=EZZZZZ) (D=EXXXXX)								
2	1	41730-000680	HEAD, REMOTE-CONTROL	1	1	1					
2-1	1	41730-000681	CONTROL, MT-3	1	1	1	1			S	
	(A=E11631)	(B=E01269)	(C=E01139)								

N:Old $\xleftarrow[\text{No}]{\text{Yes}}$ New, Q:Old $\xleftarrow[\text{Yes}]{\text{No}}$ New, R:Old $\xleftarrow[\text{Yes}]{\text{Yes}}$ New, S:Old $\xleftarrow[\text{No}]{\text{No}}$ New, W:Add, Z:Discontinued, F:Interchangeable by set, K:Q'ty Change

Copyright (C) YANMAR CO., LTD. All RightsReserved.

Fig.77. MORSE CABLE(OPTIONAL)

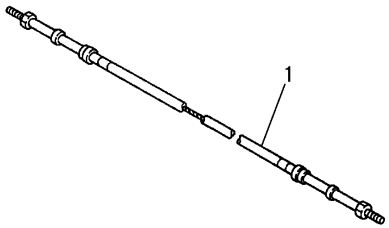

(A)=1GM10(YMI) (D)=1GM10VE
(B)=1GM10C (E)=1GM10L
(C)=1GM10 (F)=

No.	Lev.	Parts No.	Description	Q'ty (A)	(B)	(C)	(D)	(E)	(F)	I	R
1	1	41710-000380	CABLE, PP 33CX4M	2	2	2	2	1			
1-1	1	27730-301400	CABLE, REMO-CON	2	2	2	2			R	
	(A=EXXXXX)	(B=EXXXXX)	(C=EXXXXX) (D=EXXXXX)								

N:Old ◄Yes/No► New, Q:Old ◄No/Yes► New, R:Old ◄Yes/Yes► New, S:Old ◄No/No► New, W:Add, Z:Discontinued, F:Interchangeable by set, K:Q'ty Change

Copyright (C) YANMAR CO., LTD. All RightsReserved.

Fig.78. PANEL(B-TYPE/OPTIONAL)(UP TO N

(A)=1GM10(YMI) (D)=1GM10VE
(B)=1GM10C (E)=1GM10L
(C)=1GM10 (F)=

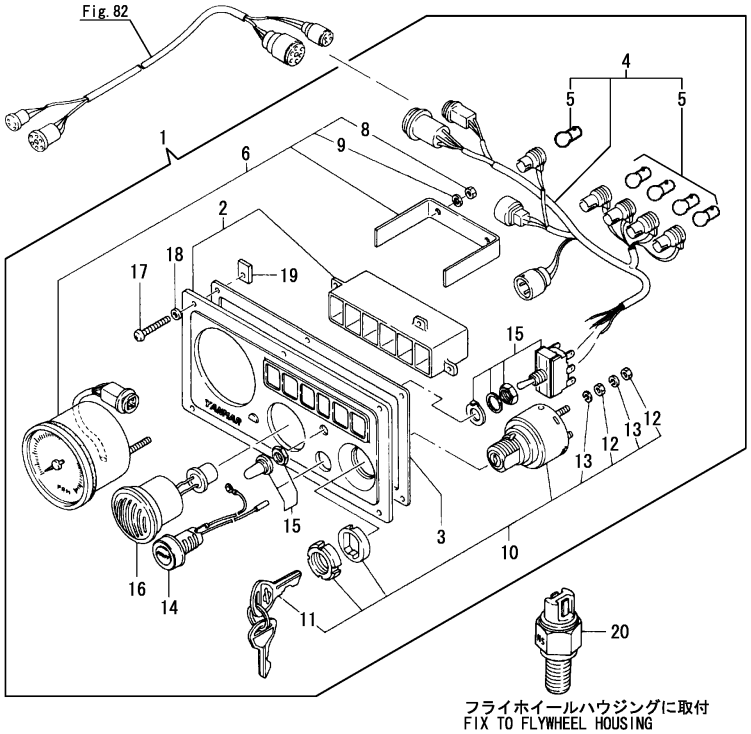

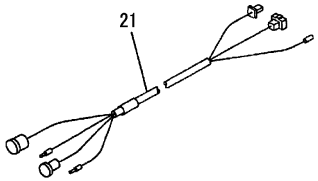

No.	Lev.	Parts No.	Description	Q'ty (A)	(B)	(C)	(D)	(E)	(F)	I	R
1	1	128170-91001	PANEL, INSTRUMENT	1	1	1	1				
1-1	1	128170-91002	PANEL ASSY	1	1	1	1			S	1
	(A=*2001.03.)	(B=*2001.03.)	(C=*2001.03.) (D=*2001.03.)								
2	2	128170-91010	BODY, PANEL	1	1	1	1				
3	2	128170-91020	GASKET, PANEL	1	1	1	1				
4	2	128170-91031	HARNESS, WIRE	1	1	1	1				
5	3	46150-001110	LAMP, 12V-3W	5	5	5	5				
6	2	128170-91100	TACHOMETER	1	1	1	1				
8	3	26716-050002	NUT, M5	2	2	2	2				
9	3	22217-050000	WASHER, SPRING 5	2	2	2	2				
10	2	124070-91250	SWITCH, KEY	1	1	1	1				
11	3	124070-91290	KEY, SWITCH	1	1	1	1				
12	3	26716-050002	NUT, M5	4	4	4	4				
13	3	22217-050000	WASHER, SPRING 5	4	4	4	4				
14	2	124070-91300	SWITCH, PUSH BUTTON	1	1	1	1				
15	2	128170-91310	SWITCH, LAMP	1	1	1	1				
16	2	104271-91351	BUZZER	1	1	1	1				
17	2	128170-91810	SCREW, M5X35	6	6	6	6				
18	2	128170-91820	WASHER, 5	6	6	6	6				
19	2	128170-91830	NUT, PLATE M5	6	6	6	6				
20	1	128170-91160	SENSOR, TACHOMETER	1	1	1	1				
21	1	128391-77860	HARNESS,ADAPTER B/12	1	1	1	1			W	
	(A=E12169)	(B=E01339)	(C=E01141)								
21-1	1	128391-77860	HARNESS,ADAPTER B/12	1	1	1	1			Z	1
	(A=*2001.03.)	(B=*2001.03.)	(C=*2001.03.) (D=*2001.03.)								

Remarks
(1)Interchangeable by simultaneous replacement with No.1-1 & 21-1.

N:Old ←Yes/No→ New, Q:Old ←No/Yes→ New, R:Old ←Yes/Yes→ New, S:Old ←No/No→ New, W:Add, Z:Discontinued, F:Interchangeable by set, K:Q'ty Change

Copyright (C) YANMAR CO., LTD. All RightsReserved.

Fig.79. PANEL(B-TYPE/OPTIONAL)(FROM DE

(A)=1GM10(YMI) (D)=1GM10VE
(B)=1GM10C (E)=1GM10L
(C)=1GM10 (F)=

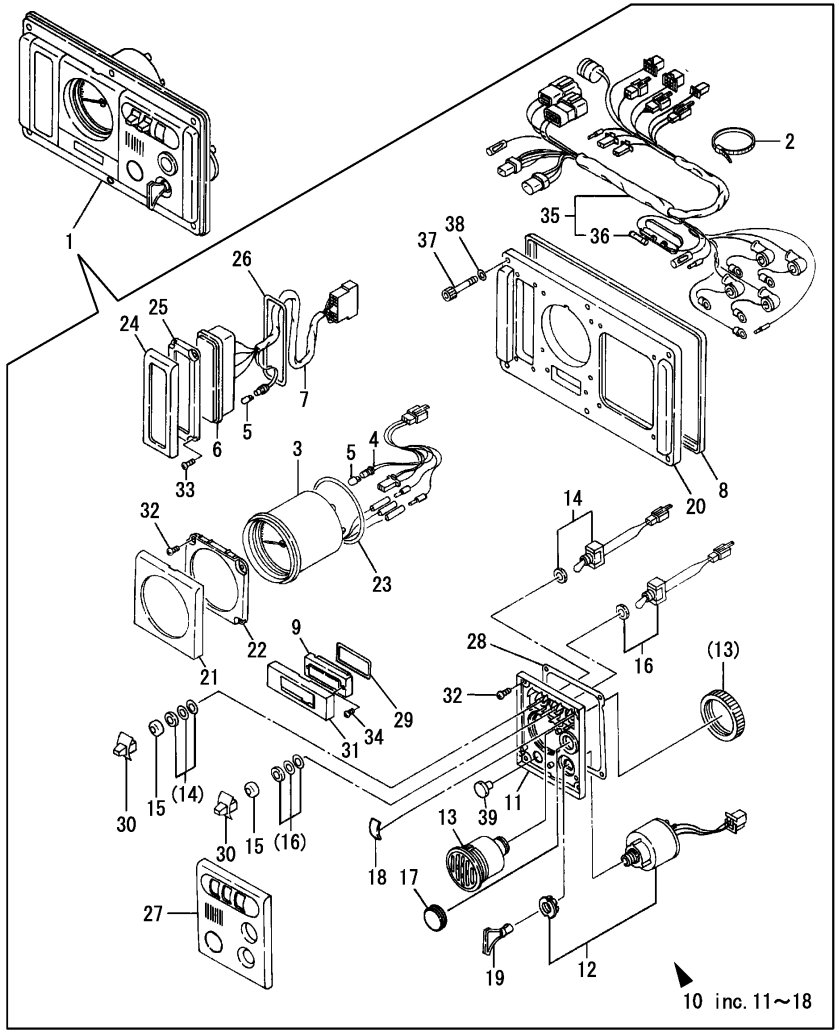

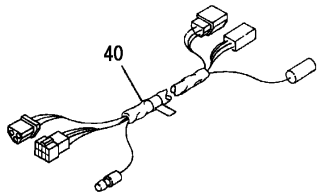

No.	Lev.	Parts No.	Description	Q'ty (A)	(B)	(C)	(D)	(E)	(F)	I	R
1	1	128391-91130	PANEL ASSY, B	1	1	1					
2	2	198451-78680	CLAMP, CORD	1	1	1				W	
	(A=E23998)	(B=E04164)	(C=E02122)								
3	2	128391-91200	TACHOMETER KIT	1	1	1					
4	2	129574-91870	HARNESS, PANEL	1	1	1					
5	2	124617-91980	BULB, 12V-1.7W-T10	6	6	6					
6	2	128391-91260	BOX, ALARM B6 1	1	1	1					
7	2	128391-91860	HARNESS, ALARM B6-1	1	1	1					
8	2	128391-91700	GASKET, FRAME B	1	1	1					
9	2	129170-91650	COVER	1	1	1					
10	2	129198-91230	BOX, SWITCH	1	1	1				W	
	(A=E23998)	(B=E04164)	(C=E02122)								
11	3	129574-91410	PLATE, SWITCH	1	1	1					
12	3	121575-91250	SWITCH, KEY	1	1	1					
13	3	104271-91352	BUZZER, 12V	1	1	1					
14	3	129170-91800	SWITCH, BUZZER R2P	1	1	1					
15	3	129574-91780	CAP, RUBBER	2	2	2					
16	3	129574-91790	SWITCH, R2P	1	1	1					
17	3	120324-91690	PLUG, SWITCH	1	1	1					
18	3	129170-91810	COVER, SWITCH	1	1	1					
19	2	123482-91291	KEY, SWITCH	1	1	1					
20	2	128391-91930	PANEL, B	1	1	1					
21	2	129574-91620	BEZEL, TACHOMETER	1	1	1					
22	2	129574-91420	PLATE, TACHOMETER	1	1	1					
23	2	129574-91720	GASKET	1	1	1					
24	2	128391-91640	BEZEL, ALARM 6	1	1	1					
25	2	128391-91440	PLATE, MOUNTING	1	1	1					
26	2	128391-91740	GASKET	1	1	1				Z	
	(A=E23998)	(B=E04164)	(C=E02122)								
27	2	120324-91610	BEZEL, STOP SWITCH	1	1	1					
28	2	129574-91710	GASKET, SWITCH	1	1	1					
29	2	129574-91750	GASKET,	1	1	1					
30	2	129574-91770	KNOB, SWITCH	2	2	2					
31	2	129574-91650	BEZEL, CLOCK	1	1	1					
32	2	127692-91410	SCREW, M4X12	8	8	8					
33	2	127692-91440	SCREW, M4X12	4	4	4					
34	2	127692-91450	SCREW, M3X12	2	2	2					
35	2	128391-91850	HARNESS, MAIN B1	1	1	1					
36	3	124617-91990	FUSE, 3A	1	1	1					
37	2	127687-91870	BOLT, M6X35	6	6	6					
38	2	127687-91880	WASHER, PLAIN 6	6	6	6					
39	2	129574-91760	COVER, STOP CABLE	1	1	1				W	
	(A=*1994.01)	(B=*1994.01)	(C=*1994.01)								
40	1	128391-77700	HARNESS, WIRE 3M	1	1	1					

N:Old $\frac{\text{Yes}}{\text{No}}$ New, Q:Old $\frac{\text{No}}{\text{Yes}}$ New, R:Old $\frac{\text{Yes}}{\text{Yes}}$ New, S:Old $\frac{\text{No}}{\text{No}}$ New, W:Add, Z:Discontinued, F:Interchangeable by set, K:Q'ty Change

Copyright (C) YANMAR CO., LTD. All RightsReserved.

Fig.80. INSTRUMENT PANEL(A-TYPE)(OPTIONAL)

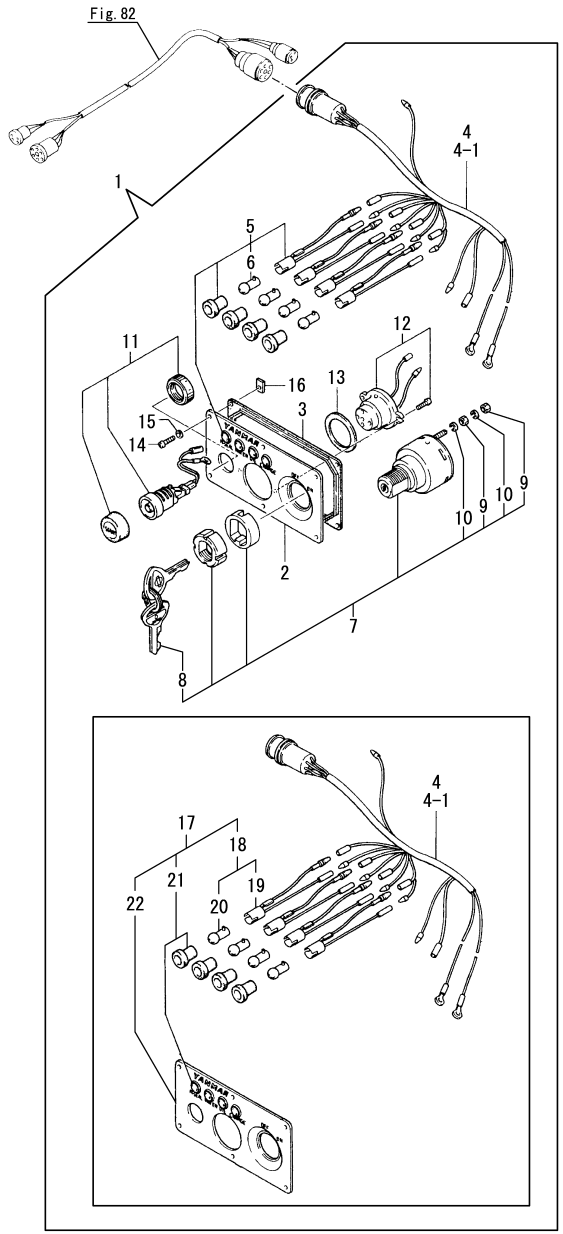

(A)=1GM10(YMI) (D)=1GM10VE
(B)=1GM10C (E)=1GM10L
(C)=1GM10 (F)=

No.	Lev.	Parts No.	Description	Q'ty (A)	(B)	(C)	(D)	(E)	(F)	I	R
1	1	128371-91000	PANEL ASSY		1						1
1-1	1	128371-91001	PANEL ASSY, A		1					S	1
		(B=*2001.07.)									
1-2	1	128371-91002	PANEL ASSY, A		1					N	
		(B=*2015.04.)									
2	2	128270-91010	BODY, PANEL		1					Z	
		(B=*2015.04.)									
3	2	128270-91020	GASKET, PANEL		1						
4	2	128371-91030	HARNESS, PANEL		1						
4-1	2	128371-91200	HARNESS		1					S	
		(B=*2001.07.)									
5	2	128270-91040	LAMP, PILOT		4					Z	1
		(B=*2015.04.)									
6	3	46150-001110	LAMP, 12V-3W		4					Z	
		(B=*2015.04.)									
7	2	124070-91250	SWITCH, KEY		1						
8	3	124070-91290	KEY, SWITCH		1						
9	3	26716-050002	NUT, M5		4						
10	3	22217-050000	WASHER, SPRING 5		4						
11	2	124070-91300	SWITCH, PUSH BUTTON		1						
12	2	128270-91350	BUZZER, ALARM		1						
13	2	128270-91360	GASKET, ALARM BUZZER		1						
14	2	128170-91810	SCREW, M5X35		6						
15	2	128170-91820	WASHER, 5		6						
16	2	128170-91830	NUT, PLATE M5		6						
17	2	128371-91500	VISOR ASSY,SPARE PAR		1					W	
		(B=*2015.04.)									
18	3	128270-91260	LAMP ASSY,CODE		4					W	
		(B=*2015.04.)									
19	4	128270-91270	CORD ASSY		4					W	
		(B=*2015.04.)									
20	4	128270-91280	LAMP		4					W	
		(B=*2015.04.)									
21	3	128270-91340	LENS ASSY		4					W	
		(B=*2015.04.)									
22	3	128270-91600	VISOR		1					W	
		(B=*2015.04.)									

Remarks
(1)These items are no longer available.
No.17 is a substitue parts.

N:Old $\xleftarrow[\text{No}]{\text{Yes}}$ New, Q:Old $\xleftarrow[\text{Yes}]{\text{No}}$ New, R:Old $\xleftarrow[\text{Yes}]{\text{Yes}}$ New, S:Old $\xleftarrow[\text{No}]{\text{No}}$ New, W:Add, Z:Discontinued, F:Interchangeable by set, K:Q'ty Change

Copyright (C) YANMAR CO., LTD. All RightsReserved.

Fig.81. PANEL(A-TYPE)(OPTIONAL)

(A)=1GM10(YMI)
(B)=1GM10C
(C)=1GM10
(D)=1GM10VE
(E)=1GM10L
(F)=

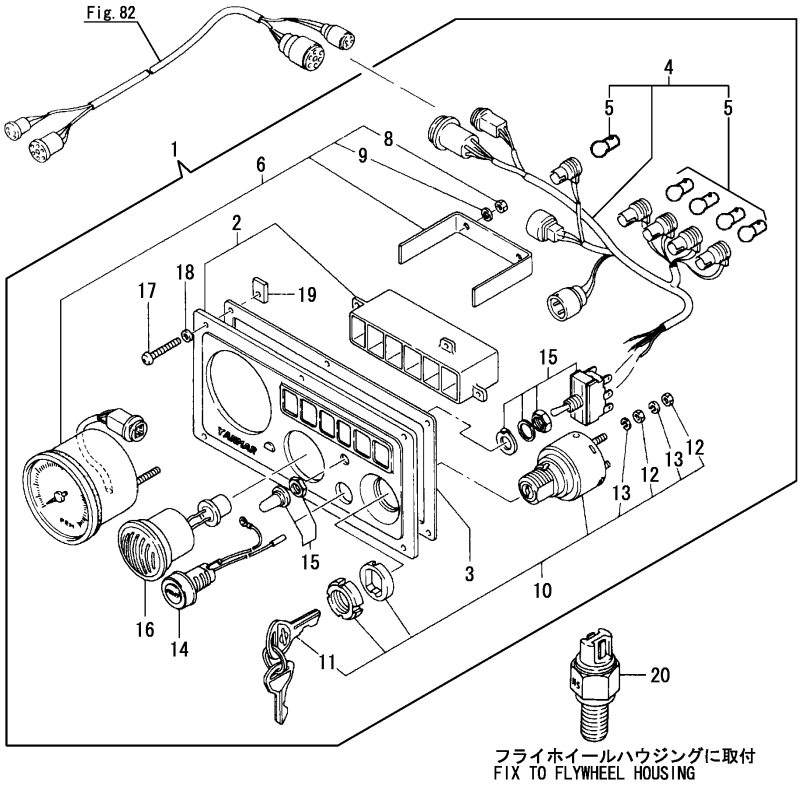

No.	Lev.	Parts No.	Description	Q'ty (A)	(B)	(C)	(D)	(E)	(F)	I	R
1	1	128670-91001	PANEL ASSY					1			
2	2	128170-91010	BODY, PANEL					1			
3	2	128170-91020	GASKET, PANEL					1			
4	2	128170-91031	HARNESS, WIRE					1			
5	3	46150-001110	LAMP, 12V-3W					5			
6	2	128670-91100	TACHOMETER					1			
8	3	26716-050002	NUT, M5					2			
9	3	22217-050000	WASHER, SPRING 5					2			
10	2	124070-91250	SWITCH, KEY					1			
11	3	124070-91290	KEY, SWITCH					1			
12	3	26716-050002	NUT, M5					4			
13	3	22217-050000	WASHER, SPRING 5					4			
14	2	124070-91300	SWITCH, PUSH BUTTON					1			
15	2	128170-91310	SWITCH, LAMP					1			
16	2	104271-91351	BUZZER					1			
17	2	128170-91810	SCREW, M5X35					6			
18	2	128170-91820	WASHER, 5					6			
19	2	128170-91830	NUT, PLATE M5					6			
20	1	128170-91160	SENSOR, TACHOMETER					1			

N:Old $\frac{\text{Yes}}{\text{No}}$ New, Q:Old $\frac{\text{No}}{\text{Yes}}$ New, R:Old $\frac{\text{Yes}}{\text{Yes}}$ New, S:Old $\frac{\text{No}}{\text{No}}$ New, W:Add, Z:Discontinued, F:Interchangeable by set, K:Q'ty Change

Copyright (C) YANMAR CO., LTD. All RightsReserved.

Fig.82. EXTENSION WIRE(OPTIONAL)

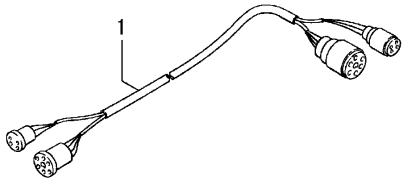

(A)=1GM10(YMI)
(B)=1GM10C
(C)=1GM10
(D)=1GM10VE
(E)=1GM10L
(F)=

No.	Lev.	Parts No.	Description	Q'ty (A)	(B)	(C)	(D)	(E)	(F)	I	R
1	1	128170-77500	CORD, EXTENSION 3000					1			

N:Old $\xleftarrow[\text{No}]{\text{Yes}}$ New, Q:Old $\xleftarrow[\text{Yes}]{\text{No}}$ New, R:Old $\xleftarrow[\text{Yes}]{\text{Yes}}$ New, S:Old $\xleftarrow[\text{No}]{\text{No}}$ New, W:Add, Z:Discontinued, F:Interchangeable by set, K:Q'ty Change

Copyright (C) YANMAR CO., LTD. All RightsReserved.

Fig.83. SPECIAL TOOL(OPTIONAL)

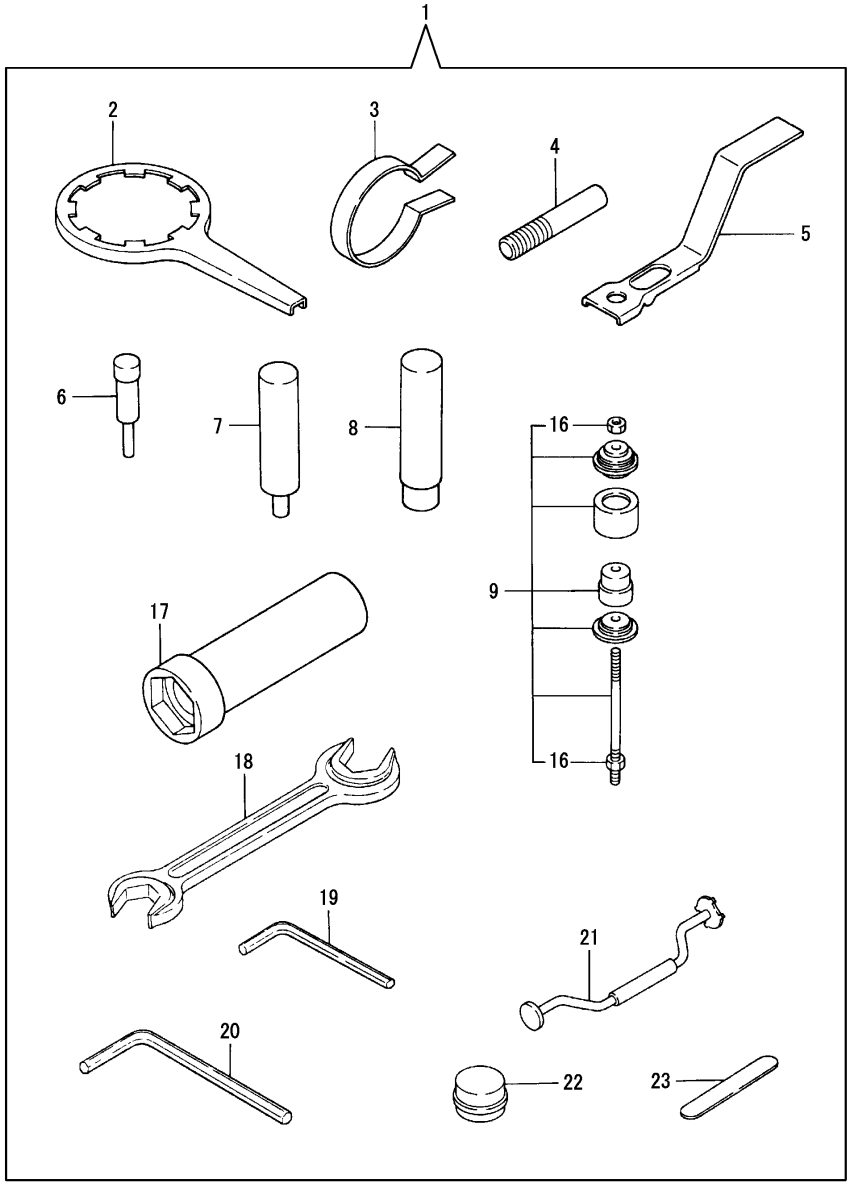

(A)=1GM10(YMI) (D)=1GM10VE
(B)=1GM10C (E)=1GM10L
(C)=1GM10 (F)=

No.	Lev.	Parts No.	Description	Q'ty (A)	(B)	(C)	(D)	(E)	(F)	I	R
1	1	728270-92400	TOOL ASSY, SPECIAL	1	1	1		1			
1-1	1	728270-92401	TOOL ASSY, SPECIAL	1	1	1	1	1		S	
	(A=E10132)	(B=E01035)	(C=E01032)	(E=E00349)							
2	2	124550-35350	WRENCH, FILTER	1	1	1		1			
2-1	2	119640-92750	TOOL, FILTER WRENCH	1	1	1	1	1		S	
	(A=E10132)	(B=E01035)	(C=E01032)	(E=E00349)							
3	2	101200-92140	TOOL, PISTON & RING	1	1	1	1	1			
4	2	101104-92180	TOOL, NOZZLE REMOVER	1	1	1	1	1			
5	2	124085-92210	TOOL, VALVE REMOVER	1	1	1	1	1			
6	2	124085-92250	TOOL, VALVE GUIDE	1	1	1	1	1			
7	2	124085-92260	TOOL, PIN REMOVER	1	1	1	1	1			
8	2	124085-92270	TOOL, BUSH REMOVER	1	1	1	1	1			
9	2	124085-92400	TOOL, METAL REMOVER	1	1	1	1	1			
16	3	26716-160002	NUT, M16	2	2	2	2	2			
17	2	124085-92700	WRENCH, GEAR NUT	1	1	1	1	1			
18	2	28110-270300	SPANNER, 27X30	1	1	1	1	1			
19	2	28150-040000	WRENCH, BAR 4	1	1	1	1	1			
20	2	28150-050000	WRENCH, BAR 5	1	1	1	1	1			
21	2	28210-000031	TOOL, VALVE RAPPING	1	1	1	1	1			
22	2	28210-000070	COMPOUND	1	1	1	1	1			
23	2	28312-200750	GAUGE, 0.20X75	1	1	1	1	1			

N:Old $\frac{\text{Yes}}{\text{No}}$ New, Q:Old $\frac{\text{No}}{\text{Yes}}$ New, R:Old $\frac{\text{Yes}}{\text{Yes}}$ New, S:Old $\frac{\text{No}}{\text{No}}$ New, W:Add, Z:Discontinued, F:Interchangeable by set, K:Q'ty Change

Copyright (C) YANMAR CO., LTD. All RightsReserved.

Fig.84. SPARE PARTS(OPTIONAL)

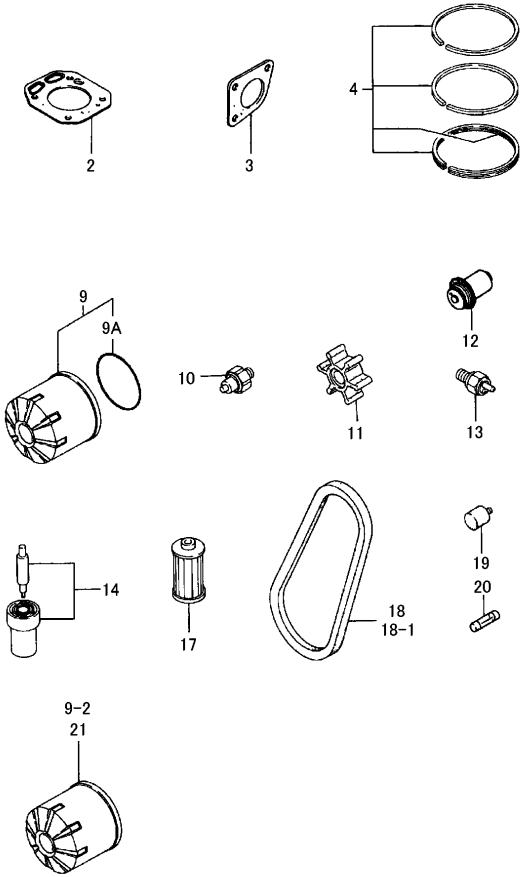

(A)=1GM10(YMI) (D)=1GM10VE
(B)=1GM10C (E)=1GM10L
(C)=1GM10 (F)=

No.	Lev.	Parts No.	Description	Q'ty (A)	(B)	(C)	(D)	(E)	(F)	I	R
2	1	128171-01330	GASKET, HEAD	1	1	1	1	1			
3	1	128170-13200	GASKET	1	1	1		1			
3-1	1	128170-13201	GASKET, EXHAUST	1	1	1	1	1		N	
	(A=E10132)	(B=E01035)	(C=E01032)		(E=E00349)						
4	1	705311-22500	RING SET, PISTON	1	1	1	1	1			
9	1	124450-35100	FILTER, OIL	1	1	1		1			
9-1	1	119660-35150	FILTER ASSY, D80XL75	1	1	1	1	1		N	
	(A=E10132)	(B=E01035)	(C=E01032)		(E=E00349)						
9-2	1	119305-35151	FILTER ASSY, D68XL65	1	1	1	1	1		R	1
	(A=EXXXXX)	(B=EXXXXX)	(C=EXXXXX) (D=EXXXXX)		(E=EXXXXX)						
9A	2	124450-35110	O-RING, OIL FILTER	1	1	1	1	1		Z	
	(A=EXXXXX)	(B=EXXXXX)	(C=EXXXXX) (D=EXXXXX)		(E=EXXXXX)						
10	1	124060-39451	SWITCH, 0.2KG	1	1	1	1	1			
10-1	1	124060-39452	SWITCH, HYDRAULIC	1	1	1	1	1		N	
	(A=EXXXXX)	(B=EXXXXX)	(C=EXXXXX) (D=EXXXXX)		(E=EXXXXX)						
11	1	128170-42070	IMPELLER	1	1	1	1	1			
11-1	1	128176-42070	IMPELLER	1	1	1	1	1		R	
	(A=EXXXXX)	(B=EXXXXX)	(C=EXXXXX) (D=EXXXXX)		(E=EXXXXX)						
12	1	105582-49200	THERMOSTAT	1	1	1	1	1			
13	1	128275-91340	SWITCH, TEMPERATURE	1	1	1	1	1			
14	1	124770-53000	VALVE ASSY,INJECTION	1	1	1	1	1			
17	1	104500-55710	ELEMENT, FUEL FILTER	1	1	1	1	1			
18	1	104214-42780	V-BELT, HM30	1	1	1		1			
18-1	1	105582-77790	V-BELT, HM31	1	1	1	1	1		S	
	(A=E03691)	(B=E00341)	(C=E00336)		(E=E00218)						
19	1	27210-200200	ZINC, SCREW20X20	1	1	1	1	1			
20	1	46150-003680	FUSE, 30A	1	1	1	1	1			
21	1	119305-35170	FILTER ASSY, D68XL65	1	1	1	1	1			2

Remarks
(1)Non-branded filter(without Yanmar logo).
(2)Branded filter(with Yanmar logo).
It is interchangeable with non-branded filter.(Interchangeability : R)

N:Old $\overset{\text{Yes}}{\underset{\text{No}}{\leftrightarrow}}$ New, Q:Old $\overset{\text{No}}{\underset{\text{Yes}}{\leftrightarrow}}$ New, R:Old $\overset{\text{Yes}}{\underset{\text{Yes}}{\leftrightarrow}}$ New, S:Old $\overset{\text{No}}{\underset{\text{No}}{\leftrightarrow}}$ New, W:Add, Z:Discontinued, F:Interchangeable by set, K:Q'ty Change

Copyright (C) YANMAR CO., LTD. All RightsReserved.

Fig.85. GASKET SET(OPTIONAL)

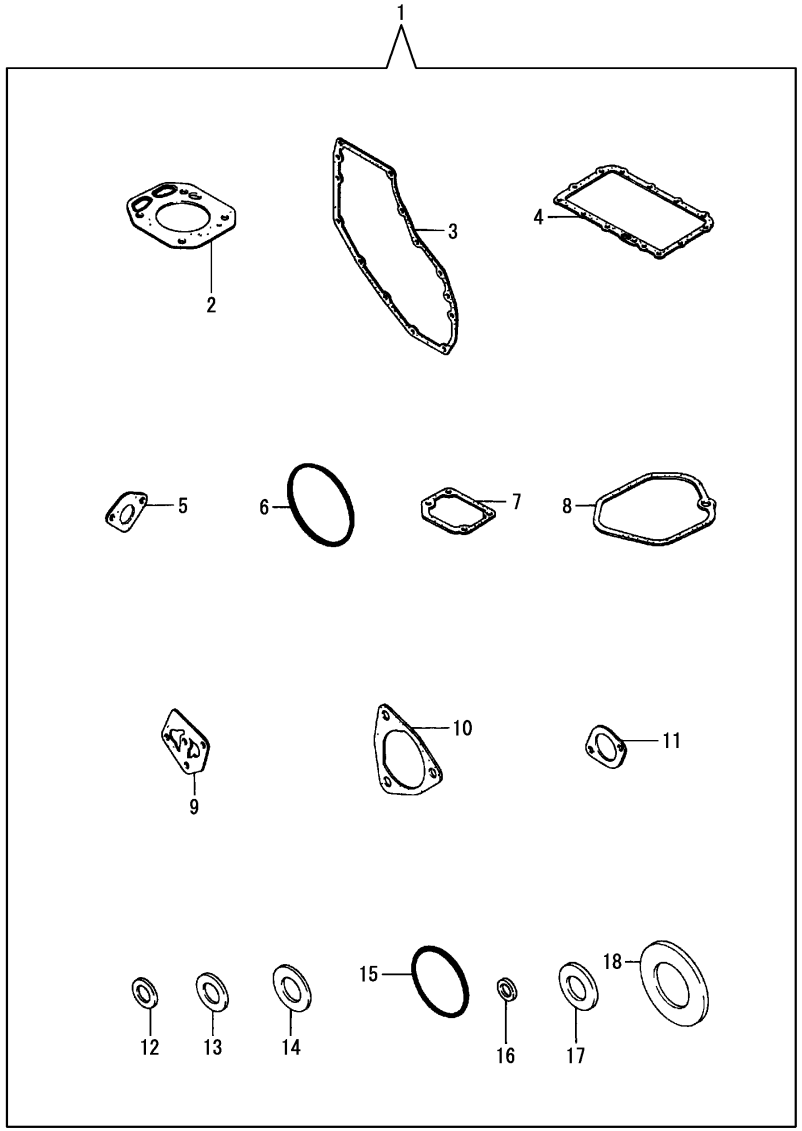

(A)=1GM10(YMI) (D)=1GM10VE
(B)=1GM10C (E)=1GM10L
(C)=1GM10 (F)=

No.	Lev.	Parts No.	Description	Q'ty (A)	(B)	(C)	(D)	(E)	(F)	I	R
1	1	728171-92600	GASKET SET	1	1	1	1	1			
1-1	1	728171-92601	GASKET SET	1	1	1	1	1		N	
	(A=E10132)	(B=E01035)	(C=E01032)	(E=E00349)							
2	2	128171-01330	GASKET, HEAD	1	1	1		1			
2-1	2	128171-01911	GASKET, HEAD	1	1	1	1	1		N	
	(A=E05917)	(B=E00566)	(C=E00509)	(E=E00250)							
3	2	128170-01510	GASKET, GEAR CASE	1	1	1		1			
3-1	2	128170-01511	GASKET, GEAR CASE	1	1	1	1	1		N	
	(A=E10132)	(B=E01035)	(C=E01032)	(E=E00349)							
4	2	128170-01750	GASKET, OIL SUMP	1	1	1		1			
4-1	2	128170-01751	GASKET, OIL PAN	1	1	1	1	1		N	
	(A=E10132)	(B=E01035)	(C=E01032)	(E=E00349)							
5	2	121520-01850	GASKET	1	1	1		1			
5-1	2	121520-01851	GASKET, FEED PUMP	1	1	1	1	1		N	
	(A=E09063)	(B=E00908)	(C=E00898)	(E=E00341)							
6	2	105225-02020	O-RING	1	1	1	1	1			
7	2	128170-03070	GASKET, BREATHER	1	1	1	1	1			
8	2	128170-11310	GASKET, BONNET	1	1	1	1	1			
9	2	128170-32030	GASKET, PUMP COVER	1	1	1	1	1			
10	2	128170-42090	GASKET, END COVER	1	1	1	1	1			
11	2	104211-49160	GASKET, THERMO COVER	1	1	1	1	1			
12	2	23414-080000	GASKET, 8X1.0	20	20	20	20	20			
13	2	23414-100000	GASKET, 10X1.0	5	5	5	5	5			
14	2	23414-120000	GASKET, 12X1.0	20	20	20	20	20			
15	2	24321-000350	O-RING, 1AG35.0	1	1	1	1	1			
16	2	43400-500390	SEAL WASHER 6S	2	2	2		2			
16-1	2	22190-060002	WASHER, SEAL 6	2	2	2	2	2		N	
	(A=E12740)	(B=E01385)	(C=E01195)	(E=E00731)							
17	2	43400-500450	SEAL WASHER 12S	2	2	2		2			
17-1	2	22190-120002	WASHER, SEAL 12	2	2	2	2	2		N	
	(A=E12740)	(B=E01385)	(C=E01195)	(E=E00731)							
18	2	43400-500570	WASHER, SEAL 24	1	1	1		1			
18-1	2	22190-240002	WASHER, SEAL 24	1	1	1	1	1		N	
	(A=E12740)	(B=E01385)	(C=E01195)	(E=E00731)							

N:Old $\xleftarrow[\text{No}]{\text{Yes}}$ New, Q:Old $\xleftarrow[\text{Yes}]{\text{No}}$ New, R:Old $\xleftarrow[\text{Yes}]{\text{Yes}}$ New, S:Old $\xleftarrow[\text{No}]{\text{No}}$ New, W:Add, Z:Discontinued, F:Interchangeable by set, K:Q'ty Change

Copyright (C) YANMAR CO., LTD. All RightsReserved.

Fig.86. SAFETY LABEL

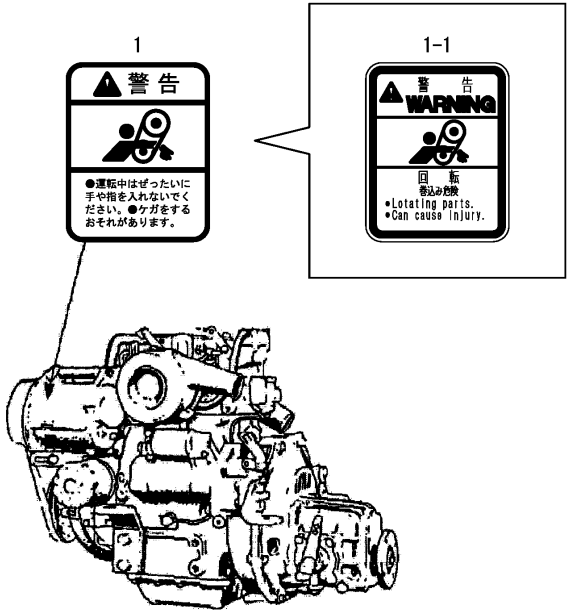

(A)=1GM10(YMI) (D)=1GM10VE
(B)=1GM10C (E)=1GM10L
(C)=1GM10 (F)=

No.	Lev.	Parts No.	Description	Q'ty (A)	(B)	(C)	(D)	(E)	(F)	I	R
1	1	128176-07250	LABEL, CAUTION		1	1	1	1			
1-1	1	128296-07350	LABEL, DANGER		1	1	1	1		R	
		(B=EXXXXX)	(C=EXXXXX)	(D=EXXXXX)	(E=EXXXXX)						

N:Old $\xleftrightarrow[\text{No}]{\text{Yes}}$ New, Q:Old $\xleftrightarrow[\text{Yes}]{\text{No}}$ New, R:Old $\xleftrightarrow[\text{Yes}]{\text{Yes}}$ New, S:Old $\xleftrightarrow[\text{No}]{\text{No}}$ New, W:Add, Z:Discontinued, F:Interchangeable by set, K:Q'ty Change

Copyright (C) YANMAR CO., LTD. All RightsReserved.

Fig.87. GENERATOR(DENSO)

(A)=1GM10(YMI) (D)=1GM10VE
(B)=1GM10C (E)=1GM10L
(C)=1GM10 (F)=

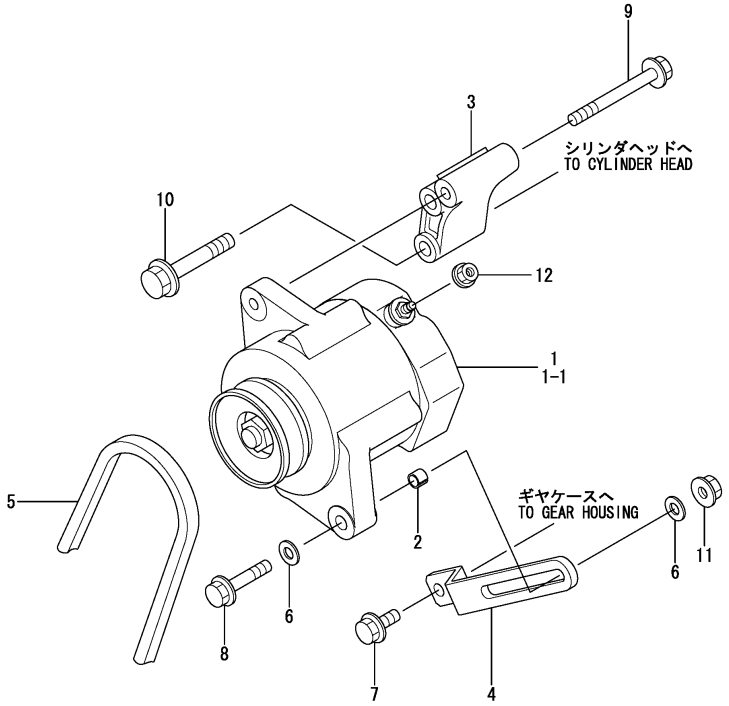

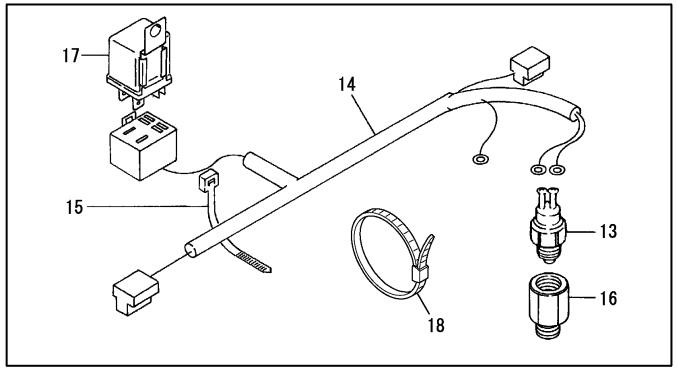

No.	Lev.	Parts No.	Description	Q'ty (A)	(B)	(C)	(D)	(E)	(F)	I	R
1	1	119626-77210	ALTERNATOR, 12V-55A	1	1	1					
1-1	1	129052-77201	GENERATOR, 12V-40A	1	1	1				F	1
	(A=E25107)	(B=E04417)	(C=E02130)								
1-2	1	129052-77230	ALTERNATOR, 12V-40A	1	1	1				R	2
	(A=*2016.12)	(B=*2016.12)	(C=*2016.12)								
2	1	124085-01900	GUIDE, O-RING	1	1	1					
3	1	128171-77270	BRACKET,ALTERNATOR	1	1	1					
4	1	124465-77330	ADJUSTER, BELT	1	1	1					
5	1	128170-77350	V-BELT, HM29	1	1	1					
6	1	22137-080000	WASHER, 8	2	2	2					
7	1	26106-080202	BOLT, M8X 20 PLATED	1	1	1					
8	1	26106-080402	BOLT, M8X 40 PLATED	1	1	1					
9	1	26106-080752	BOLT, M8X 75 PLATED	1	1	1					
10	1	26106-100602	BOLT, M10X 60 PLATED	2	2	2					
11	1	26306-080002	NUT, M8	1	1	1					
12	1	26366-060002	NUT, M6	1	1	1				W	
	(A=*2012.08.)	(B=*2012.08.)	(C=*2012.08.)								
13	1	171375-44900	SWITCH, TEMPERATURE	1	1	1				W	
	(A=*2013.11.)	(B=*2013.11.)	(C=*2013.11.)								
14	1	128171-77930	HARNESS, WIRE	1	1	1				W	
	(A=*2013.11.)	(B=*2013.11.)	(C=*2013.11.)								
14-1	1	128171-77910	HARNESS, WIRE	1	1	1				F	1
	(A=E25107)	(B=E04417)	(C=E02130)								
15	1	160370-78950	BAND, WIRE L-98	1	1	1				W	
	(A=*2013.11.)	(B=*2013.11.)	(C=*2013.11.)								
16	1	128171-91810	SPACER, SWITCH	1	1	1				W	
	(A=*2013.11.)	(B=*2013.11.)	(C=*2013.11.)								
17	1	128171-91850	RELAY, MAGNET	1	1	1				W	
	(A=*2013.11.)	(B=*2013.11.)	(C=*2013.11.)								
18	1	129C00-91200	BAND	1	1	1				W	
	(A=E25107)	(B=E04417)	(C=E02130)								

Remarks
(1)No.1-1 & Fig.58 No.1-3 interchangeable by set.
(2)Inner parts are shown in Fig.96.

N:Old $\frac{\text{Yes}}{\text{No}}$ New, Q:Old $\frac{\text{No}}{\text{Yes}}$ New, R:Old $\frac{\text{Yes}}{\text{Yes}}$ New, S:Old $\frac{\text{No}}{\text{No}}$ New, W:Add, Z:Discontinued, F:Interchangeable by set, K:Q'ty Change

Copyright (C) YANMAR CO., LTD. All RightsReserved.

Fig.88. (68A)GENERATOR COMPONENT PARTS

(A)=1GM10(YMI)
(B)=1GM10C
(C)=1GM10
(D)=1GM10VE
(E)=1GM10L
(F)=

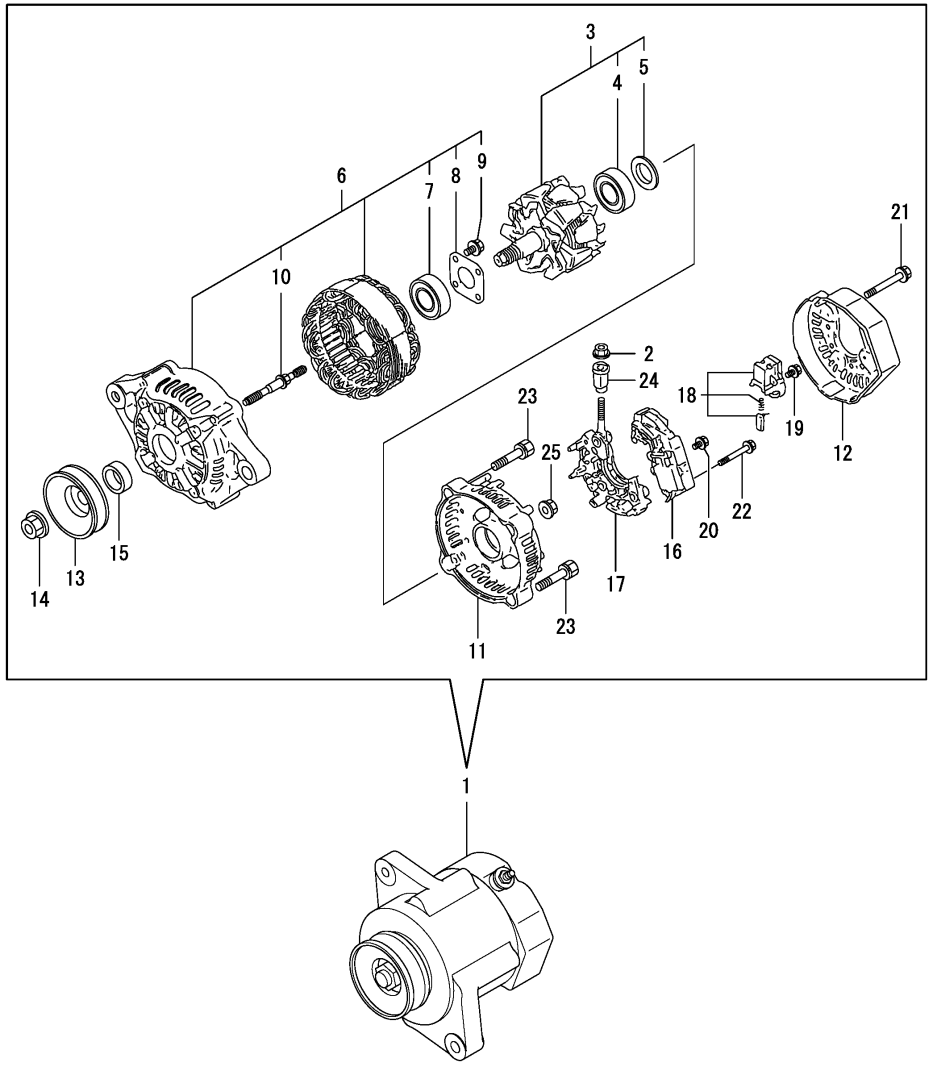

No.	Lev.	Parts No.	Description	Q'ty (A)	(B)	(C)	(D)	(E)	(F)	I	R
1	1	119626-77210	ALTERNATOR, 12V-55A	1	1	1					
2	2	X9490561001	NUT	1	1	1					
3	2	129052-77380	ROTOR ASSY	1	1	1					
4	3	123501-79240	BEARING, BALL	1	1	1					
5	3	119620-79250	COVER, BEARING	1	1	1					
6	2	129052-77422	FRAME ASSY	1	1	1					
7	3	119620-79200	BEARING, BALL	1	1	1					
8	3	119620-79210	PLATE, RETAINER	1	1	1					
9	3	119620-79220	SCREW	4	4	4					
10	3	119620-79230	STUD	2	2	2					
11	2	128401-77440	COVER, END	1	1	1					
12	2	119626-77450	COVER, END	1	1	1					
13	2	119620-77461	PULLEY, GENERATOR	1	1	1					
14	2	119620-77471	NUT	1	1	1					
15	2	119620-77490	COLLAR	1	1	1					
16	2	129423-77710	REGULATOR ASSY	1	1	1					
17	2	129052-79260	HOLDER ASSY	1	1	1					
18	2	129052-79270	HOLDER ASSY, BRUSH	1	1	1					
19	2	119620-79290	SCREW	6	6	6					
20	2	119620-79300	SCREW	1	1	1					
21	2	119620-79310	BOLT	3	3	3					
22	2	119620-79320	SCREW, W/WASHER	2	2	2					
23	2	119620-79330	BOLT	2	2	2					
24	2	119620-79340	BUSH, INSULATION	1	1	1					
25	2	119620-79350	NUT	2	2	2					

N:Old $\xleftarrow[\text{No}]{\text{Yes}}$ New, Q:Old $\xleftarrow[\text{Yes}]{\text{No}}$ New, R:Old $\xleftarrow[\text{Yes}]{\text{Yes}}$ New, S:Old $\xleftarrow[\text{No}]{\text{No}}$ New, W:Add, Z:Discontinued, F:Interchangeable by set, K:Q'ty Change

Copyright (C) YANMAR CO., LTD. All RightsReserved.

Fig.89. (70A)BILGE PUMP(OPTIONAL)(FROM

(A)=1GM10(YMI) (D)=1GM10VE
(B)=1GM10C (E)=1GM10L
(C)=1GM10 (F)=

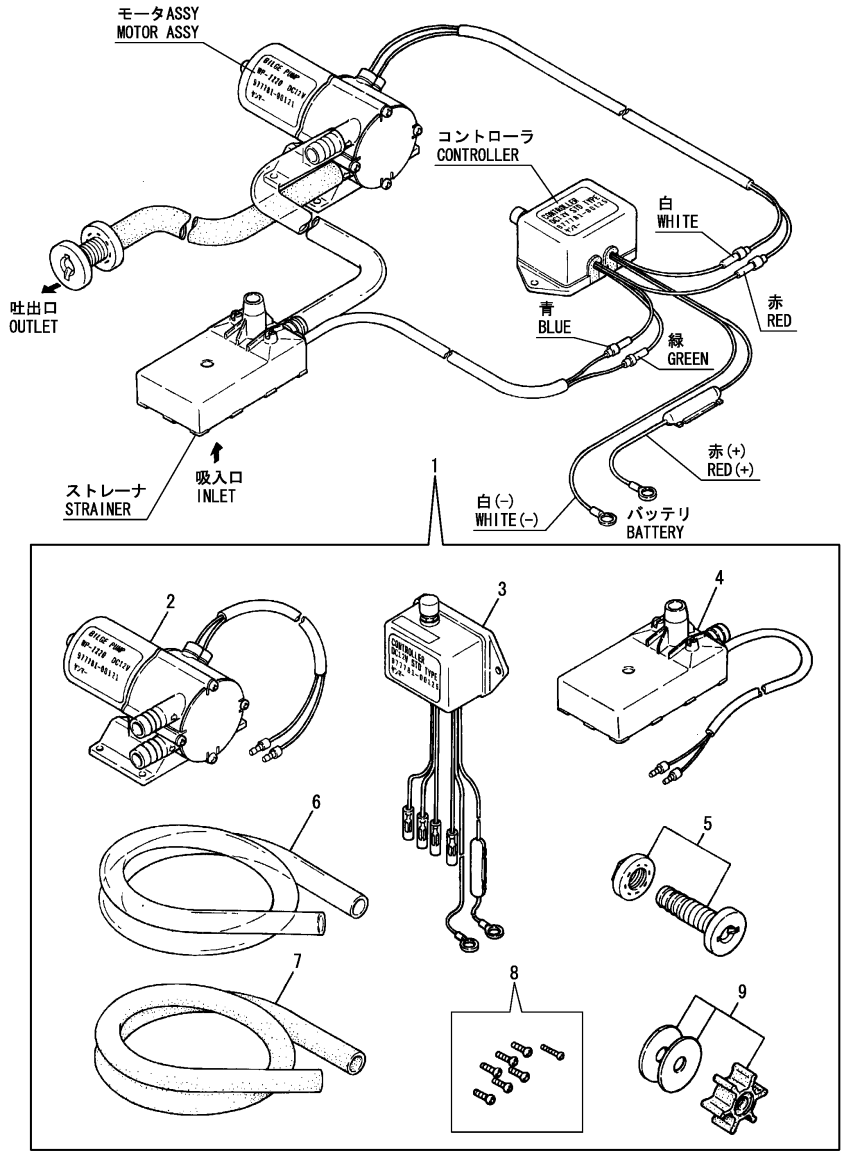

No.	Lev.	Parts No.	Description	Q'ty (A)	(B)	(C)	(D)	(E)	(F)	I	R
1	1	977781-00121	PUMP (12V).BILGE	1	1	1				W	1
	(A=EXXXXX)	(B=EXXXXX)	(C=EXXXXX)								
1-1	1	977781-00121	PUMP (12V).BILGE	1	1	1				Z	1
	(A=EXXXXX)	(B=EXXXXX)	(C=EXXXXX)								
2	2	977781-00123	MOTOR ASSY(BILG PUMP	1	1	1					
3	2	977781-00125	CONTROLLER	1	1	1					
4	2	X17910000XX	STRAINER	1	1	1					
5	2	X179100100X	PIPE ASSY	1	1	1					
6	2	X0044021509	HOSE, A	1	1	1					
7	2	X0044021500	PIPE(B)	1	1	1					
8	2	X199903800X	SCREW KIT	1	1	1					
9	2	X418500100X	IMPELLER KIT	1	1	1					

Remarks
(1)Interchangeability is <S>
with Fig.70B No.1.

N:Old $\frac{\text{Yes}}{\text{No}}$ New, Q:Old $\frac{\text{No}}{\text{Yes}}$ New, R:Old $\frac{\text{Yes}}{\text{Yes}}$ New, S:Old $\frac{\text{No}}{\text{No}}$ New, W:Add, Z:Discontinued, F:Interchangeable by set, K:Q'ty Change

Copyright (C) YANMAR CO., LTD. All RightsReserved.

Fig.90. (70B)BILGE PUMP(OPTIONAL)(FROM

(A)=1GM10(YMI)
(B)=1GM10C
(C)=1GM10
(D)=1GM10VE
(E)=1GM10L
(F)=

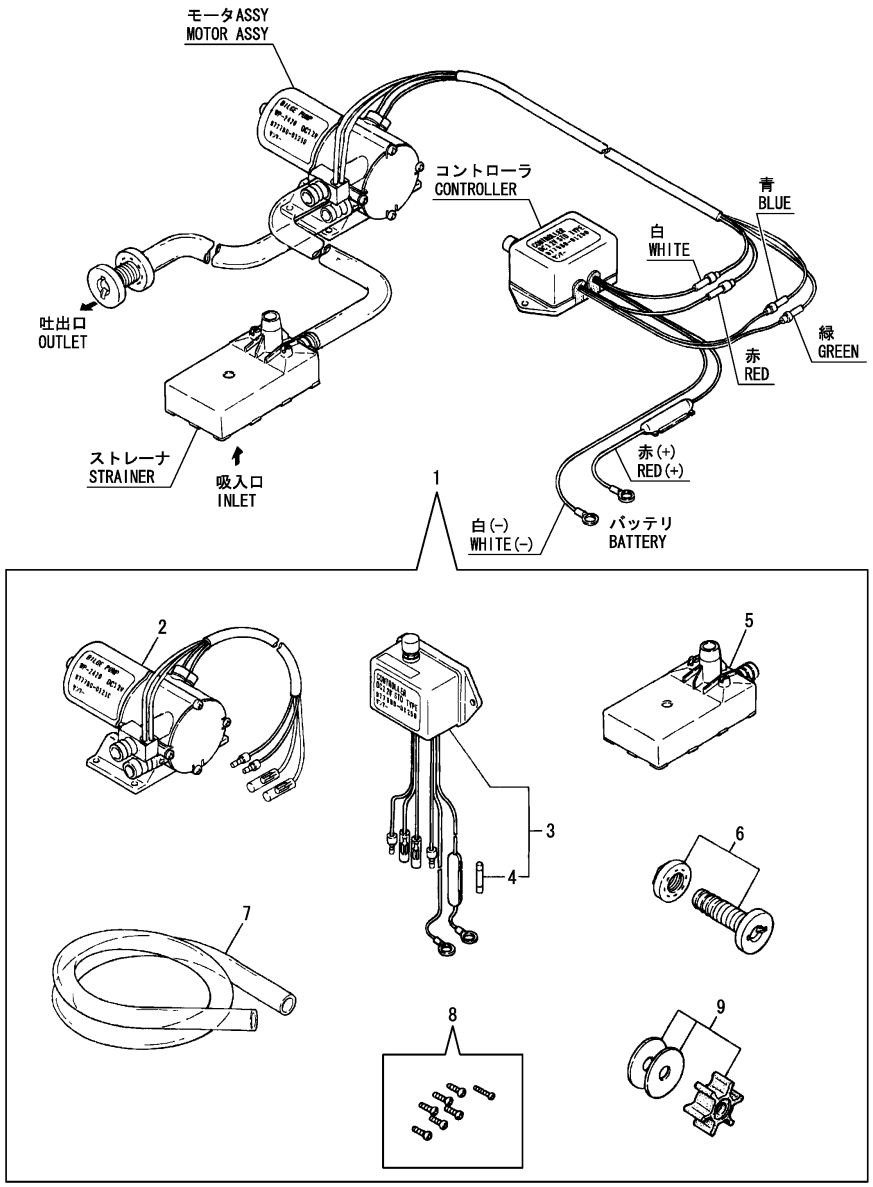

No.	Lev.	Parts No.	Description	Q'ty (A)	(B)	(C)	(D)	(E)	(F)	I	R
1	1	977780-01210	PUMP(12V).BILGE	1	1	1				W	1
	(A=EXXXXX)	(B=EXXXXX)	(C=EXXXXX)								
1-1	1	977780-01210	PUMP(12V).BILGE	1	1	1				Z	1
	(A=EXXXXX)	(B=EXXXXX)	(C=EXXXXX)								
2	2	977780-01230	MOTOR ASSY(BILG PUMP	1	1	1					
3	2	977780-01250	CONTROLLER	1	1	1					
4	3	X8636008003	FUSE, 8A	1	1	1					
5	2	X179100021X	STRAINER	1	1	1					
6	2	X179100100X	PIPE ASSY	1	1	1					
7	2	X0044021509	HOSE, A	1	1	1					
8	2	X199903800X	SCREW KIT	1	1	1					
9	2	977780-03000	IMPELLER KIT	1	1	1					

Remarks
(1)Interchangeability is <N>
with Fig.70C No.1.

N:Old $\frac{\text{Yes}}{\text{No}}$ New, Q:Old $\frac{\text{No}}{\text{Yes}}$ New, R:Old $\frac{\text{Yes}}{\text{Yes}}$ New, S:Old $\frac{\text{No}}{\text{No}}$ New, W:Add, Z:Discontinued, F:Interchangeable by set, K:Q'ty Change

Copyright (C) YANMAR CO., LTD. All RightsReserved.

Fig.91. (70C)BILGE PUMP(OPTIONAL)(FROM

(A)=1GM10(YMI) (D)=1GM10VE
(B)=1GM10C (E)=1GM10L
(C)=1GM10 (F)=

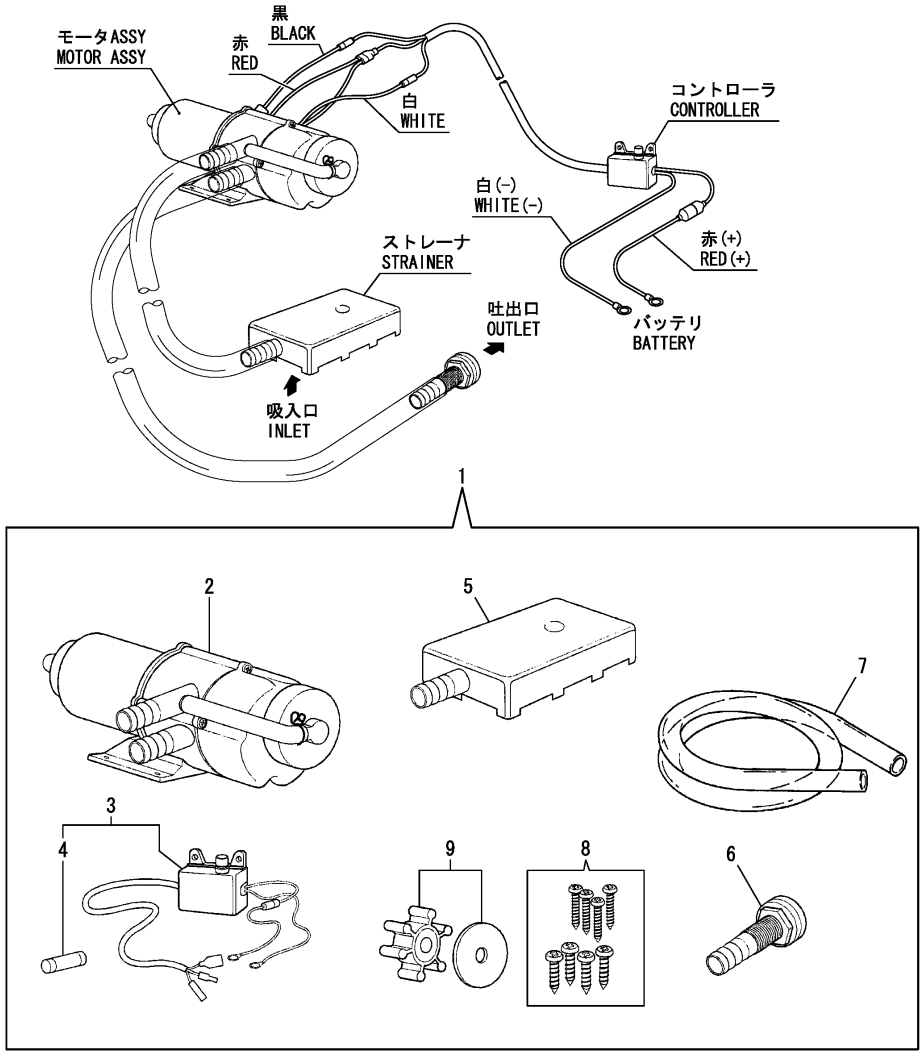

No.	Lev.	Parts No.	Description	Q'ty (A)	(B)	(C)	(D)	(E)	(F)	I	R
1	1	977780-01211	PUMP ASSY, BILGE	1	1	1				W	
	(A=EXXXXX)	(B=EXXXXX)	(C=EXXXXX)								
2	2	X0318101004	MOTOR ASSY, BILGE	1	1	1					
3	2	X158606410X	SWITH	1	1	1					
4	3	X8636015001	FUSE, 15A 12V	1	1	1					
5	2	X179100022X	STRAINER	1	1	1					
6	2	X179100100X	PIPE ASSY	1	1	1					
7	2	X0044021509	HOSE, A	1	1	1					
8	2	X199906101X	SCREW SET	1	1	1					
9	2	977780-03000	IMPELLER KIT	1	1	1					

N:Old $\xleftarrow[\text{No}]{\text{Yes}}$ New, Q:Old $\xleftarrow[\text{Yes}]{\text{No}}$ New, R:Old $\xleftarrow[\text{Yes}]{\text{Yes}}$ New, S:Old $\xleftarrow[\text{No}]{\text{No}}$ New, W:Add, Z:Discontinued, F:Interchangeable by set, K:Q'ty Change

Copyright (C) YANMAR CO., LTD. All RightsReserved.

Fig.92. (79A)INSTRUMENT PANEL(B-TYPE/V

(A)=1GM10(YMI)
(B)=1GM10C
(C)=1GM10
(D)=1GM10VE
(E)=1GM10L
(F)=

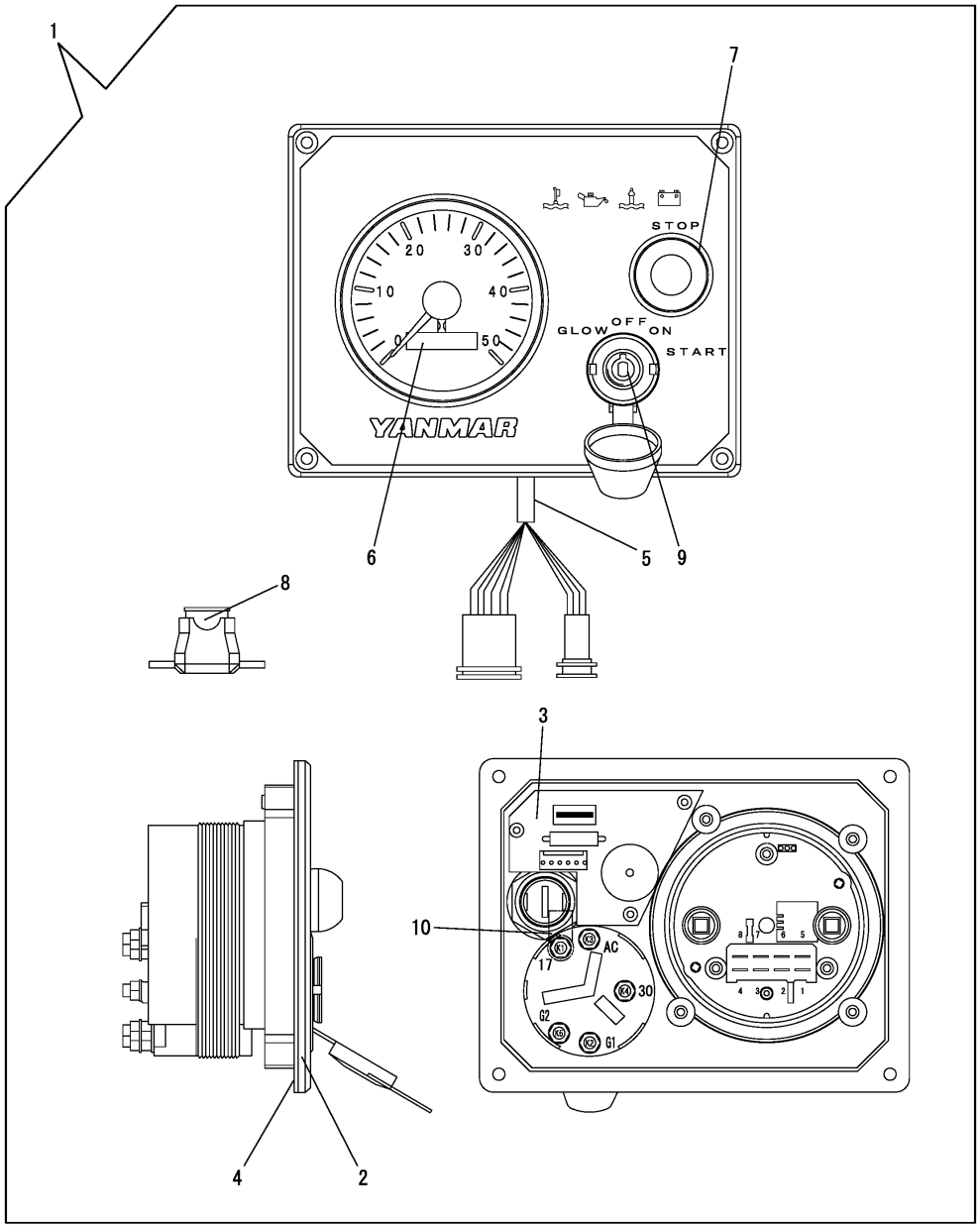

No.	Lev.	Parts No.	Description	Q'ty (A)	(B)	(C)	(D)	(E)	(F)	I	R
1	1	129271-91110	PANEL, INSTRUMENT B	1	1					W	
	(A=EXXXXX)	(B=EXXXXX)									
1-1	1	129271-91111	PANEL, INSTRUMENT B	1	1					R	
	(A=EXXXXX)	(B=EXXXXX)									
1-2	1	129271-91112	PANEL	1	1					N	
	(A=E23998)	(B=E04164)									
1-3	1	128171-91110	PANEL, INSTRUMENT B	1	1					N	
	(A=E24417)	(B=E04320)									
2	2	129271-91120	STICKER	1	1						
3	2	129271-91130	CIRCUIT	1	1						
3-1	2	129271-91131	CIRCUIT WITH LED&BZR	1	1					N	
	(A=E23998)	(B=E04164)									
3-2	2	129271-91132	CIRCUIT, PANEL B	1	1					N	
	(A=E24417)	(B=E04320)									
4	2	129271-91140	SEAL, RUBBER	1	1						
5	2	129271-91150	HARNESS, WIRE	1	1						
6	2	129271-91210	TACHOMETER	1	1						
6-1	2	128171-91210	TACHOMETER, IND 97	1	1					N	
	(A=E24417)	(B=E04320)									
7	2	129271-91220	SWITCH, STOP	1	1						
8	2	129271-91230	FUSE, PANEL	1	1						
9	2	127412-91250	SWITCH, KEY	1	1						
10	2	129271-91260	CAP, RUBBER M5	1	1					W	
	(A=EXXXXX)	(B=EXXXXX)									

N:Old ◄Yes/No► New, Q:Old ◄No/Yes► New, R:Old ◄Yes/Yes► New, S:Old ◄No/No► New, W:Add, Z:Discontinued, F:Interchangeable by set, K:Q'ty Change

Copyright (C) YANMAR CO., LTD. All RightsReserved.

Fig.93. (79B)INSTRUMENT PANEL(B-TYPE/K

(A)=1GM10(YMI)
(B)=1GM10C
(C)=1GM10
(D)=1GM10VE
(E)=1GM10L
(F)=

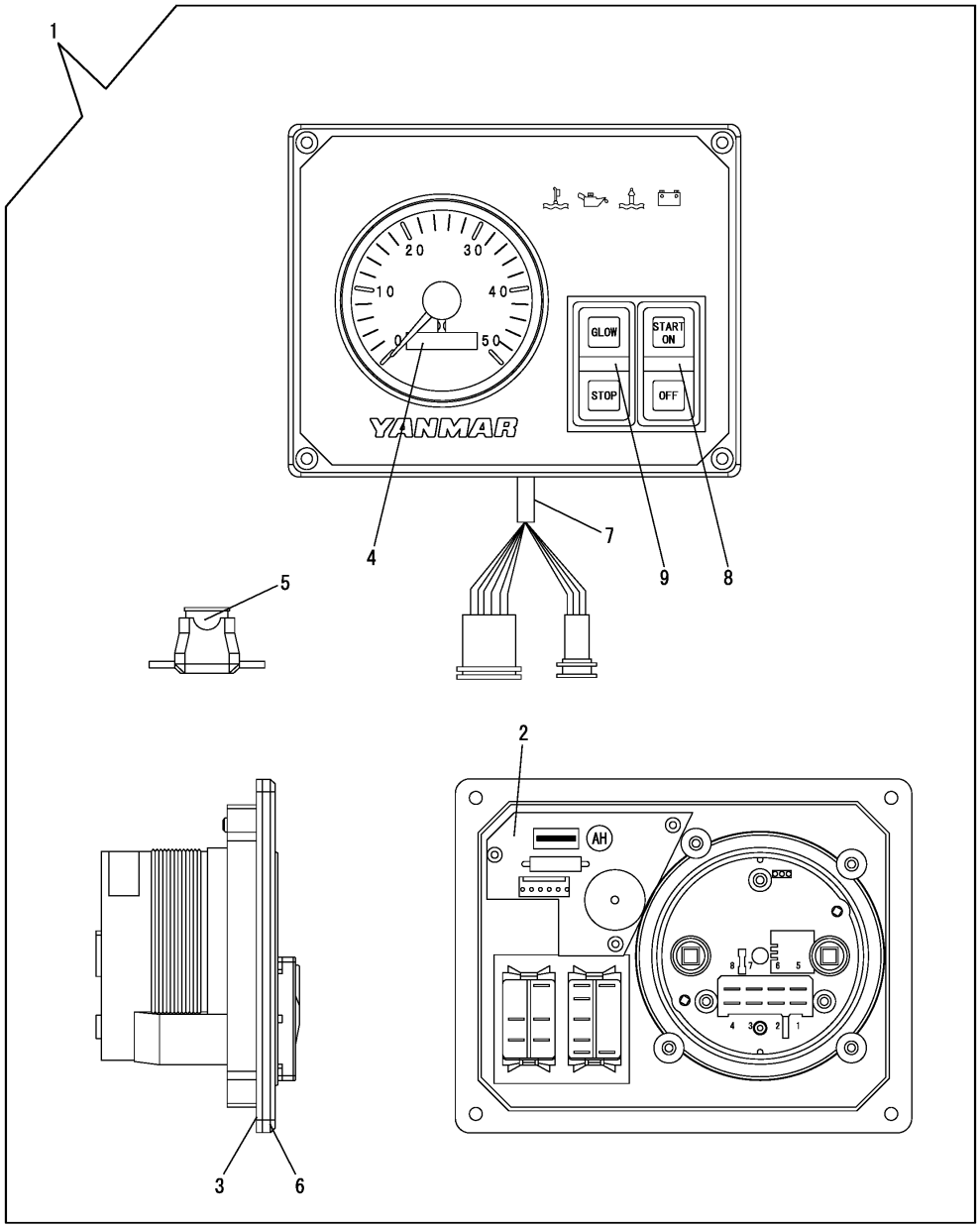

No.	Lev.	Parts No.	Description	Q'ty (A)	(B)	(C)	(D)	(E)	(F)	I	R
1	1	129271-91300	PANEL	1	1					W	
	(A=EXXXXX)	(B=EXXXXX)									
1-1	1	129271-91301	PANEL	1	1					N	
	(A=EXXXXX)	(B=EXXXXX)									
1-2	1	128171-91300	PANEL, KEYLESS B	1	1					N	
	(A=E24787)	(B=E04353)									
2	2	129271-91130	CIRCUIT	1	1						
2-1	2	129271-91131	CIRCUIT WITH LED&BZR	1	1					N	
	(A=EXXXXX)	(B=EXXXXX)									
2-2	2	129271-91132	CIRCUIT, PANEL B	1	1					N	
	(A=E24787)	(B=E04353)									
3	2	129271-91140	SEAL, RUBBER	1	1						
4	2	129271-91210	TACHOMETER	1	1						
4-1	2	128171-91210	TACHOMETER, IND 97	1	1					N	
	(A=E24787)	(B=E04353)									
5	2	129271-91230	FUSE, PANEL	1	1						
6	2	129271-91310	PANEL, B	1	1						
7	2	129271-91320	HARNESS, B KEYLESS	1	1						
8	2	129271-91330	SWITCH, OFF/START	1	1						
9	2	129271-91340	SWITCH, GLOW/STOP	1	1						

N:Old $\xleftarrow[\text{No}]{\text{Yes}}$ New, Q:Old $\xleftarrow[\text{Yes}]{\text{No}}$ New, R:Old $\xleftarrow[\text{Yes}]{\text{Yes}}$ New, S:Old $\xleftarrow[\text{No}]{\text{No}}$ New, W:Add, Z:Discontinued, F:Interchangeable by set, K:Q'ty Change

Copyright (C) YANMAR CO., LTD. All RightsReserved.

Fig.94. (79C)INSTRUMENT PANEL(B-TYPE/M

(A)=1GM10(YMI)
(B)=1GM10C
(C)=1GM10
(D)=1GM10VE
(E)=1GM10L
(F)=

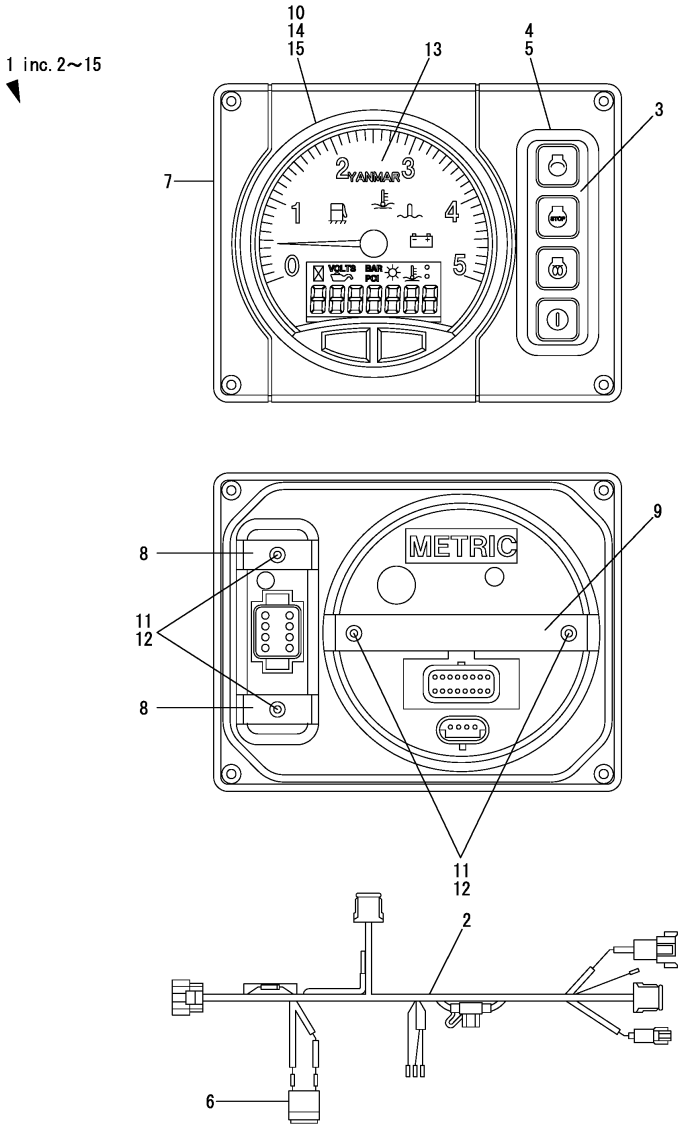

No.	Lev.	Parts No.	Description	Q'ty (A)	(B)	(C)	(D)	(E)	(F)	I	R
1	1	164100-30100	PANEL ASSY, B20	1	1					W	1
	(A=E24811)	(B=E04353)									
1-1	1	164100-30101	PANEL ASSY, B20	1	1					N	
	(A=EXXXXX)	(B=EXXXXX)									
2	2	164100-21100	HARNESS, PANEL	1	1						
3	2	164100-31100	SWITCH, PANEL	1	1						
3-1	2	164100-31101	SWITCH, PANEL MD	1	1					N	
	(A=EXXXXX)	(B=EXXXXX)									
4	2	164100-31150	GASKET, SWITCH MD	1	1						
5	2	164100-31900	BEZEL, SWITCH BK MD	1	1						
6	2	164100-36100	BUZZER, PANEL	1	1						
7	2	164100-39100	FRAME, PANEL B	1	1						
8	2	164100-39120	BRACKET, SWITCH MD	2	2						
9	2	164100-39130	BRACKET, GAUGE 5	1	1						
10	2	164100-39150	CAP, GAUGE TERMINAL	1	1						
11	2	164100-39180	WASHER, LOCK MD	4	4						
12	2	164100-39190	NUT, M3.5 MD	4	4						
13	2	164100-53100	GAUGE, TACHOMETER	1	1						
13-1	2	164100-53101	GAUGE, TACH LCD 5 MD	1	1					N	
	(A=EXXXXX)	(B=EXXXXX)									
14	2	164100-53150	GASKET, GAUGE 5 MD	1	1						
15	2	164100-53900	BEZEL, GAUGE 5 BK MD	1	1						

Remarks
(1)Interchangeable by simultaneous replacement with Fig.58 No.7 and Fig.79D No.1,2,3.

N:Old $\xleftarrow[\text{No}]{\text{Yes}}$ New, Q:Old $\xleftarrow[\text{Yes}]{\text{No}}$ New, R:Old $\xleftrightarrow[\text{Yes}]{\text{Yes}}$ New, S:Old $\xleftrightarrow[\text{No}]{\text{No}}$ New, W:Add, Z:Discontinued, F:Interchangeable by set, K:Q'ty Change

Copyright (C) YANMAR CO., LTD. All RightsReserved.

Fig.95. (79D)STARTER RELAY(FOR MEDALLI

(A)=1GM10(YMI)
(B)=1GM10C
(C)=1GM10
(D)=1GM10VE
(E)=1GM10L
(F)=

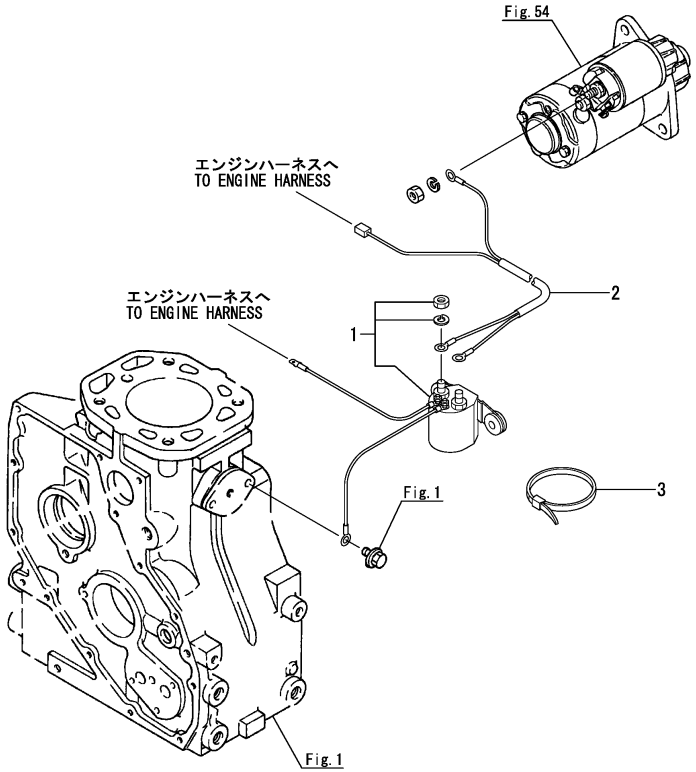

No.	Lev.	Parts No.	Description	Q'ty (A)	(B)	(C)	(D)	(E)	(F)	I	R
1	1	119575-77511	RELAY, STARTER	1	1					W	1
	(A=E24787)	(B=E04353)									
2	1	129673-77960	HARNESS, RELAY	1	1					W	1
	(A=E24787)	(B=E04353)									
3	1	120640-09130	STRAP, TIE	1	1					W	1
	(A=E24787)	(B=E04353)									

Remarks
(1)Interchangeable by simultaneous replacement with Fig.58 No.7 and Fig.79C No.1.

N:Old $\xleftrightarrow[\text{No}]{\text{Yes}}$ New, Q:Old $\xleftrightarrow[\text{Yes}]{\text{No}}$ New, R:Old $\xleftrightarrow[\text{Yes}]{\text{Yes}}$ New, S:Old $\xleftrightarrow[\text{No}]{\text{No}}$ New, W:Add, Z:Discontinued, F:Interchangeable by set, K:Q'ty Change

Copyright (C) YANMAR CO., LTD. All RightsReserved.

Fig.96. GENERATOR(INNER PARTS)(DENSO/40A)

(A)=1GM10(YMI) (D)=1GM10VE
(B)=1GM10C (E)=1GM10L
(C)=1GM10 (F)=

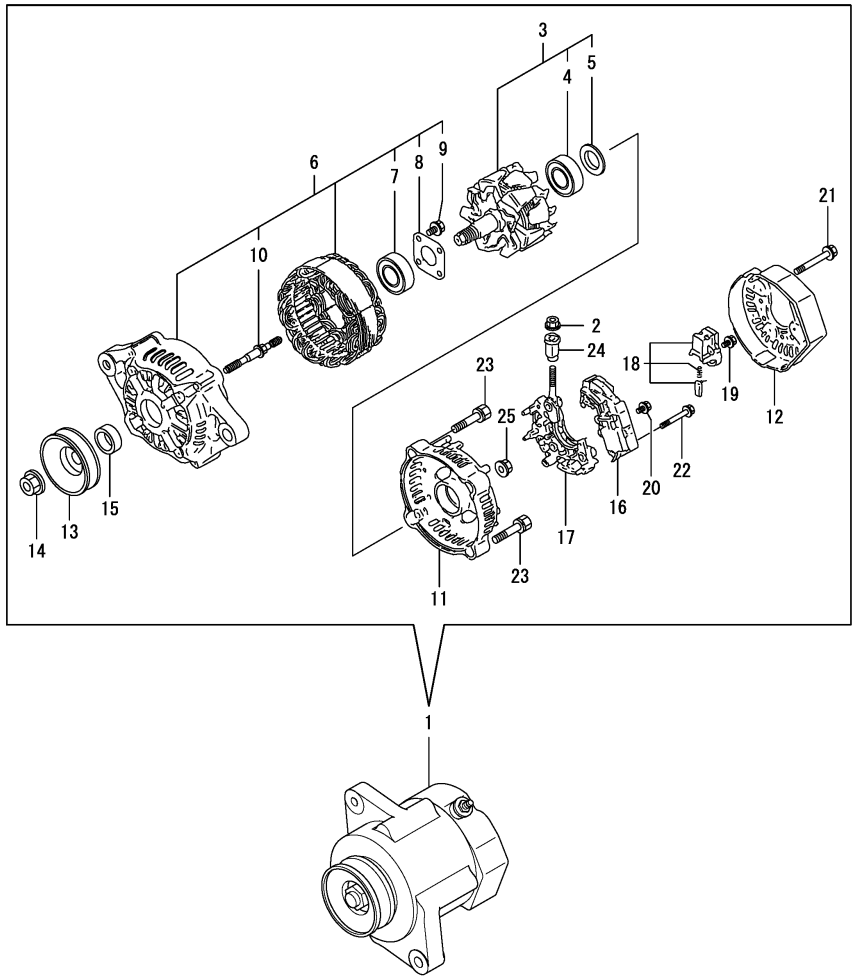

No.	Lev.	Parts No.	Description	Q'ty (A)	(B)	(C)	(D)	(E)	(F)	I	R
1	1	129052-77201	GENERATOR, 12V-40A	1	1	1				W	1
	(A=E25107)	(B=E04417)	(C=E02130)								
1-1	1	129052-77230	ALTERNATOR, 12V-40A	1	1	1				R	
	(A=*2016.12)	(B=*2016.12)	(C=*2016.12)								
2	2	X9490561001	NUT	1	1	1					
3	2	119620-77380	ROTOR ASSY	1	1	1					
4	3	123501-79240	BEARING, BALL	1	1	1					
5	3	119620-79250	COVER, BEARING	1	1	1					
6	2	129052-77421	FRAME ASSY	1	1	1					
7	3	119620-79200	BEARING, BALL	1	1	1					
8	3	119620-79210	PLATE, RETAINER	1	1	1					
9	3	119620-79220	SCREW	4	4	4					
10	3	119620-79230	STUD	2	2	2					
11	2	119620-77440	FRAME ASSY, REAR	1	1	1					
12	2	119620-77450	COVER, REAR END	1	1	1					
13	2	119620-77461	PULLEY, GENERATOR	1	1	1					
14	2	119620-77471	NUT	1	1	1					
15	2	119620-77490	COLLAR	1	1	1					
16	2	119620-77710	REGULATOR ASSY	1	1	1					
16-1	2	119620-77720	REGULATOR ASSY	1	1	1				N	
	(A=*2016.12)	(B=*2016.12)	(C=*2016.12)								
17	2	119620-79260	HOLDER ASSY	1	1	1					
18	2	129052-79270	HOLDER ASSY, BRUSH	1	1	1					
19	2	119620-79290	SCREW	6	6	6					
20	2	119620-79300	SCREW	1	1	1					
21	2	119620-79310	BOLT	3	3	3					
22	2	119620-79320	SCREW, W/WASHER	2	2	2					
23	2	119620-79330	BOLT	2	2	2					
24	2	119620-79340	BUSH, INSULATION	1	1	1					
25	2	119620-79350	NUT	2	2	2					

Remarks
(1)DENSO : from (A)=E25107, (B)=E04417 ,(C)=E02130.

N:Old $\xleftarrow[\text{No}]{\text{Yes}}$ New, Q:Old $\xleftarrow[\text{Yes}]{\text{No}}$ New, R:Old $\xleftarrow[\text{Yes}]{\text{Yes}}$ New, S:Old $\xleftarrow[\text{No}]{\text{No}}$ New, W:Add, Z:Discontinued, F:Interchangeable by set, K:Q'ty Change

Copyright (C) YANMAR CO., LTD. All RightsReserved.

Parts No. Index

Parts No.	Fig. No.	Ref. No.
101104-92180	83	4
101147-11900	15	36
101147-59810	29	15
	42	16
	43	16
101158-03061	7	5
101158-03111	7	6
101158-11230	15	27
101200-92140	83	3
101720-55750	39	7
	40	7
102210-07990	8	8
103288-39170	29	13
103338-11430	15	32
103854-39140	29	5
		10
103854-39540	29	3
		8
103854-51251	35	24
	36	24
103854-53180	38	11
103854-59191	42	12
	43	12
103854-59201	42	13
	43	13
103854-59650	41	2
104104-03750	16	4
104200-02110	6	8
104200-03600	16	3
104200-03641	16	5
104200-11180	15	7
104200-92350	65	7
		22
104200-92600	65	2
		17
104211-03770	50	3
104211-11370	15	10
104211-42130	44	20
	45	20
104211-49080	31	2
104211-49160	1	15
	14	3
	33	4
	85	11
104211-53120	38	8
104214-42780	84	18
104214-83980	75	1
		1 -1
104264-59020	42	7
	43	7

Parts No.	Fig. No.	Ref. No.
104264-59030	37	3
	42	8
		10
	43	8
		10
104264-59040	42	9
	43	9
104271-01950	2	15
104271-51450	35	29
	36	29
104271-51460	35	30
	36	30
104271-67550	72	1
104271-91351	78	16
	81	16
104271-91352	79	13
104500-55710	39	3
	40	3
	84	17
104884-59170	42	23
	43	23
105025-01220	1	6
105225-02020	6	5
	85	6
105225-11100	15	4
105225-11110	15	5
105225-14400	19	6
	20	6
105225-22300	23	8
105225-22400	23	9
105225-23180	24	9
105225-23200	24	4
105225-35290	27	8
105225-35300	28	1
105311-01090	1	4
105311-11420	15	30
105311-22090	23	1
105311-23380	24	7
105311-67200	51	1
	52	1
105425-01250	1	7
105430-01690	3	3
	27	2
105430-14200	19	5
	20	5
105430-35010	27	1
105430-55041	71	1 A
105500-51300	35	7 -1
105582-07061	8	6
105582-39140	29	16

Parts No.	Fig. No.	Ref. No.
105582-49090	1	19
105582-49200	33	1
	84	12
105582-52010	37	1
105582-59150	37	4
	42	11
	43	11
105582-77790	56	5 -1
	84	18 -1
105583-85900	73	1
		1 -1
110250-53150	38	10
110250-55610	39	5
	40	5
113200-53110	38	7
113200-53120	38	9
114780-61090	49	14 -1
119305-35151	27	4 -2
	84	9 -2
119305-35170	27	10
	84	21
119575-77511	95	1
119620-49290	1	11 -1
119620-77380	96	3
119620-77440	96	11
119620-77450	96	12
119620-77461	88	13
	96	13
119620-77471	88	14
	96	14
119620-77490	88	15
	96	15
119620-77710	96	16
119620-77720	96	16 -1
119620-79200	88	7
	96	7
119620-79210	88	8
	96	8
119620-79220	88	9
	96	9
119620-79230	88	10
	96	10
119620-79250	88	5
	96	5
119620-79260	96	17
119620-79290	88	19
	96	19
119620-79300	88	20
	96	20
119620-79310	88	21

Parts No.	Fig. No.	Ref. No.
119620-79310	96	21
119620-79320	88	22
	96	22
119620-79330	88	23
	96	23
119620-79340	88	24
	96	24
119620-79350	88	25
	96	25
119626-77210	87	1
	88	1
119626-77450	88	12
119640-92750	83	2 -1
119660-35150	27	4 -1
	84	9 -1
119717-23200	24	4 -1
120130-49350	1	11
120324-07190	8	16
120324-07200	8	17
120324-07210	8	18
120324-91610	79	27
120324-91690	79	17
120640-09130	95	3
121000-61600	44	5
	45	5
121005-08120	12	3
121111-21501	22	16
121250-77210	56	2
121370-55730	39	4
	40	4
121450-01801	2	8
121450-02100	1	12
	6	9
121450-02110	6	3
121450-02310	1	23
	6	11
121450-02320	6	10
121450-21540	21	10
	22	10
121450-51550	35	26
	36	26
121454-51100	36	3
121520-01850	37	2
	85	5
121520-01851	37	2 -1
	85	5 -1
121574-21500	21	16
121574-86320	63	4
		10
121575-08340	13	4

Parts No. Index

Parts No.	Fig. No.	Ref. No.
121575-11121	15	6
121575-61710	44	6
	45	6
121575-61720	44	7
	45	7
121575-66051	46	1
	47	1
121575-66310	45	15
121575-66550	50	4
121575-66800	48	1
	49	6
121575-66830	48	1 -1
	49	6 -1
121575-91250	79	12
121750-59890	34	5
123210-09310	1	13
	14	1
123310-77640	57	1
123482-91291	79	19
123501-79240	88	4
	96	4
124060-01050	1	3
	27	7
124060-11160	15	3 -1
124060-14090	19	2
	20	2
124060-39451	29	17
	84	10
124060-39452	29	17 -1
	84	10 -1
124060-59380	42	14
	43	14
124070-14760	19	11
124070-59060	71	2
124070-59130	71	3
124070-77950	58	4
	59	4
124070-91250	64	8
	78	10
	80	7
	81	10
124070-91290	64	9
	78	11
	80	8
	81	11
124070-91300	64	12
	78	14
	80	11
	81	14
124085-01900	87	2

Parts No.	Fig. No.	Ref. No.
124085-02220	6	4
124085-92210	83	5
124085-92250	83	6
124085-92260	83	7
124085-92270	83	8
124085-92400	83	9
124085-92700	83	17
124160-01751	2	13
124220-51890	35	32
	36	32
124240-91450	30	9
124450-35100	27	4
	84	9
124450-35110	27	4 B
	84	9 A
124450-39240	42	1
	43	1
124460-77680	1	21
124465-77330	56	4
	87	4
124550-35350	83	2
124550-51320	35	11
	36	11
124550-51341	35	12
	36	12
124550-51350	35	10
	36	10
124550-51370	35	13
	36	13
124550-51590	35	27
	36	27
124550-77030	54	2
	55	2
124617-91980	79	5
124617-91990	79	36
124770-53000	38	2
	84	14
124770-77940	58	3
	59	3
124772-77020	55	1
	67	1
124790-55601	39	1
	40	1
124950-11340	15	9 -1
124950-11450	15	33
124950-21600	21	15
124950-51190	35	15
	36	15
124950-51270	35	6
	36	6

Parts No.	Fig. No.	Ref. No.
124950-51510	35	14
	36	14
127412-91250	92	9
127610-07990	8	9
127687-91870	79	37
127687-91880	79	38
127692-91410	79	32
127692-91440	79	33
127692-91450	79	34
128170-01200	1	5
128170-01510	2	5
	85	3
128170-01511	2	5 -1
	85	3 -1
128170-01600	4	1
		4
		7 -1
128170-01750	3	5
	85	4
128170-01751	3	5 -1
	85	4 -1
128170-01830	2	11
128170-02090	6	7
128170-03020	7	1
128170-03070	7	2
		2 -1
	85	7
128170-03080	7	9
128170-03200	7	4
128170-07230	9	1
128170-07340	8	2
128170-07850	8	4
128170-08100	10	1
128170-08110	10	2
128170-08120	10	3
	11	1
128170-08130	10	4
	11	2
128170-08340	13	1
		3
128170-08350	13	2
128170-09320	1	14
	14	2
128170-11160	15	3
128170-11290	15	20
128170-11310	16	9
	85	8
128170-11340	15	9
128170-11350	15	11
128170-11860	16	1

Parts No.	Fig. No.	Ref. No.
128170-13200	18	2
	84	3
128170-13201	18	2 -1
	84	3 -1
128170-13530	18	1
128170-13600	15	17
	18	3 -1
128170-14010	19	1
	20	1
128170-14011	19	1 -1
	20	1 -1
128170-14100	19	3
	20	3
128170-14150	19	4
	20	4
128170-21200	21	8
	22	8
128170-21250	21	9
	22	9
128170-21650	21	11
	22	11
128170-32030	25	16
	85	9
128170-32200	25	10
128170-34800	26	1
128170-39010	29	1
128170-39020	29	6
128170-39200	29	11
128170-42000	30	1
128170-42050	30	3
128170-42060	30	4
128170-42070	30	5
	84	11
128170-42080	30	6
128170-42090	30	5 -4C
		7
	85	10
128170-42110	30	8
128170-42120	30	9 -1
128170-42200	30	1 -1
128170-49010	32	1
128170-49040	32	2
		5
128170-49050	32	3
		6
128170-49080	34	1
128170-49081	34	1 -1
		4
128170-49150	33	3
128170-51101	35	3

Parts No. Index

Parts No.	Fig. No.	Ref. No.
128170-51300	35	7
	36	7
128170-51500	35	25
	36	25
128170-53080	38	5
128170-55610	39	11
128170-59010	42	2
128170-59081	42	5
128170-59082	42	5 -1
128170-59811	41	1
128170-59812	41	1 -1
128170-61100	44	1
	45	1
128170-61160	44	22
	45	22
128170-61161	44	22 -1
	45	22 -1
128170-61162	44	22 -2
128170-61560	44	8 -1
128170-66010	46	2
128170-66090	46	3
128170-66200	46	8
128170-66510	50	1
128170-66550	49	1
128170-66580	50	5
128170-66850	48	2
128170-66870	49	7
128170-66880	49	8
128170-66890	49	12 -1
128170-66900	49	8 -1
128170-66910	49	12 -3
128170-66930	49	19
128170-66950	49	17
128170-67100	51	11
128170-67580	51	8
	52	8
128170-76790	53	1
128170-77010	54	1
	66	1
128170-77251	56	3
128170-77350	56	5
	87	5
128170-77500	58	6
	82	1
128170-77921	58	1
	59	1
128170-81010	60	2
		9
128170-81020	60	3
		10

Parts No.	Fig. No.	Ref. No.
128170-81030	60	1
		8
128170-86300	63	1
		7
128170-86500	76	1
128170-86501	76	1 -1
128170-91001	78	1
128170-91002	78	1 -1
128170-91010	78	2
	81	2
128170-91020	78	3
	81	3
128170-91031	78	4
	81	4
128170-91100	78	6
128170-91160	4	2 -1
		8 -1
	78	20
	81	20
128170-91310	78	15
	81	15
128170-91810	64	15
	78	17
	80	14
	81	17
128170-91820	64	16
	78	18
	80	15
	81	18
128170-91830	64	17
	78	19
	80	16
	81	19
128171-01330	1	22
	84	2
	85	2
128171-01911	1	22 -1
	85	2 -1
128171-07150	8	1
128171-08150	11	3
128171-08160	11	4
128171-12500	17	1
128171-12540	17	4
128171-21590	21	13
128171-66550	49	1 -1
128171-66890	49	12 -2
128171-77200	56	1 -1
	68	1 -1
128171-77270	87	3
128171-77910	56	12

Parts No.	Fig. No.	Ref. No.
128171-77910	56	12 -1
	87	14 -1
128171-77921	58	1 -1
128171-77922	58	1 -2
128171-77923	58	1 -3
128171-77930	87	14
128171-81010	60	1 -1
		8 -1
128171-81020	60	2 -1
		9 -1
128171-81030	60	3 -1
		10 -1
128171-81110	60	1 -2
		8 -2
128171-81120	60	2 -2
		9 -2
128171-81130	60	3 -2
		10 -2
128171-81150	60	5
		12
128171-81310	60	1 -3
		8 -3
128171-81320	60	2 -3
		9 -3
128171-81330	60	3 -3
		10 -3
128171-81510	60	1 -4
128171-81520	60	2 -4
128171-81530	60	3 -4
128171-91110	92	1 -3
128171-91210	92	6 -1
	93	4 -1
128171-91300	93	1 -2
128171-91810	56	14
		14 -1
	87	16
128171-91850	56	15
		15 -1
	87	17
128172-01600	5	1
128172-01601	5	1 -1
128172-08100	12	1
128172-08110	12	2
128172-21590	22	13
128172-21591	22	13 -1
128172-55610	40	11
128172-59010	43	2
128172-59080	43	5
128172-61620	45	16
128172-66010	47	2

Parts No.	Fig. No.	Ref. No.
128172-66090	47	3
128176-03750	16	4 -1
128176-07250	8	7
	86	1
128176-11860	16	1 -1
128176-34800	26	1 -1
128176-42070	30	5 -1
	84	11 -1
128176-42071	30	5 -2
128176-42080	30	5 -3
		5 -4A
128176-42090	30	5 -4
128270-77200	56	1
	68	1
128270-91001	64	1
128270-91002	64	1 -1
		1 -2
128270-91003	64	1 -3
128270-91010	64	2
	80	2
128270-91020	64	3
	80	3
128270-91031	64	4
128270-91040	64	5
	80	5
128270-91200	64	4 -1
128270-91230	64	7
128270-91260	64	17 B
	80	18
128270-91270	64	17 C
	80	19
128270-91280	64	17 D
	80	20
128270-91340	64	17 E
	80	21
128270-91350	64	13
	80	12
128270-91360	64	14
	80	13
128270-91400	64	17 F
128270-91500	64	17 A
128270-91600	64	17 G
	80	22
128270-91800	64	17 H
128272-11170	15	3 A
128275-11410	15	29
128275-11490	15	34
128275-11500	15	35
128275-39710	69	2
		2 -1

Parts No. Index

Parts No.	Fig. No.	Ref. No.
128275-91340	33	2
	84	13
128277-53300	38	13
128296-07190	8	11
128296-07350	8	3
		7 -1
	86	1 -1
128296-07400	8	12
		19
128296-07420	8	13
		20
128296-07450	8	14
128296-07460	8	15
128371-01601	4	1 -1
		7
128371-81050	60	4
		11
	61	1
128371-91000	80	1
128371-91001	80	1 -1
128371-91002	80	1 -2
128371-91030	80	4
128371-91200	80	4 -1
128371-91500	80	17
128374-81310	60	15
128374-81320	60	16
128374-81330	60	17
128377-07190	8	11 -1
128377-07400	8	12 -1
128377-07420	8	13 -1
128377-07450	8	14 -1
128377-07460	8	15 -1
128377-49170	34	1 -2
128391-77700	58	6 -1
	79	40
128391-77860	64	18
	78	21
		21 -1
128391-91130	79	1
128391-91200	79	3
128391-91260	79	6
128391-91440	79	25
128391-91640	79	24
128391-91700	79	8
128391-91740	79	26
128391-91850	79	35
128391-91860	79	7
128391-91930	79	20
128401-77440	88	11
128670-91001	81	1

Parts No.	Fig. No.	Ref. No.
128670-91100	81	6
128990-59131	71	3 -1
128990-59700	71	2 -1
128990-86310	63	1 -1
129052-77201	87	1 -1
	96	1
129052-77230	87	1 -2
	96	1 -1
129052-77380	88	3
129052-77421	96	6
129052-77422	88	6
129052-79260	88	17
129052-79270	88	18
	96	18
129100-01580	1	8 -1
	21	5 -1
129170-91650	79	9
129170-91800	79	14
129170-91810	79	18
129198-91230	79	10
129209-61970	49	15
129270-92100	65	8
		8 -1
129270-92600	65	9
		9 -1
129270-92610	65	12
		12 -1
129270-92620	65	13
		13 -1
129270-92630	65	14
		14 -1
129270-92640	65	15
		15 -1
129270-92650	65	10
		10 -1
129270-92690	65	11
		11 -1
129271-91110	92	1
129271-91111	92	1 -1
129271-91112	92	1 -2
129271-91120	92	2
129271-91130	92	3
	93	2
129271-91131	92	3 -1
	93	2 -1
129271-91132	92	3 -2
	93	2 -2
129271-91140	92	4
	93	3
129271-91150	92	5

Parts No.	Fig. No.	Ref. No.
129271-91210	92	6
	93	4
129271-91220	92	7
129271-91230	92	8
	93	5
129271-91260	92	10
129271-91300	93	1
129271-91301	93	1 -1
129271-91310	93	6
129271-91320	93	7
129271-91330	93	8
129271-91340	93	9
129350-21600	22	15
129423-77710	88	16
129470-67560	72	2
129574-77850	64	19
129574-91410	79	11
129574-91420	79	22
129574-91620	79	21
129574-91650	79	31
129574-91710	79	28
129574-91720	79	23
129574-91750	79	29
129574-91760	79	39
129574-91770	79	30
129574-91780	79	15
129574-91790	79	16
129574-91870	79	4
129673-77960	95	2
129795-42820	2	9
129C00-91200	87	18
135210-51900	39	9
	40	9
135210-61090	49	14
138603-59380	71	6
158600-51170	35	16 -1
160370-78950	56	13
		13 -1
	87	15
164100-21100	94	2
164100-23900	58	7
164100-30100	94	1
164100-30101	94	1 -1
164100-31100	94	3
164100-31101	94	3 -1
164100-31150	94	4
164100-31900	94	5
164100-36100	94	6
164100-39100	94	7
164100-39120	94	8

Parts No.	Fig. No.	Ref. No.
164100-39130	94	9
164100-39150	94	10
164100-39180	94	11
164100-39190	94	12
164100-53100	94	13
164100-53101	94	13 -1
164100-53150	94	14
164100-53900	94	15
171078-08100	12	1 -1
171079-61560	45	14
171375-44900	56	11
		11 -1
	87	13
172100-53200	38	12
174100-54120	35	22
	36	22
174200-51260	49	16
174307-51170	35	16
	36	16
174307-51181	35	17
	36	17
174307-51700	35	23
	36	23
177070-03501	60	4 -1
		11 -1
		18
	61	1 -1
177088-02430	8	5
196315-01380	62	10 -1
198451-78680	79	2
22117-060000	17	5
22117-080000	42	17
	43	17
22117-120000	25	14
22137-080000	87	6
22137-100000	15	13
22190-060002	42	15 -1
	43	15 -1
	49	10 -1
	85	16 -1
22190-080002	16	11 -1
	42	18 -1
		19 -1
22190-120002	42	20 -1
		21 -1
	49	13 -1
	85	17 -1
22190-240002	3	4
	27	3 -1
	85	18 -1

Parts No. Index

Parts No.	Fig. No.	Ref. No.
22212-050000	63	6
		12
22217-040000	7	8
22217-050000	64	11
	78	9
		13
	80	10
	81	9
		13
22217-060000	37	6
22217-080000	15	18
	18	4
	54	3
22217-120000	13	5
22242-000100	30	10
	44	21
	45	21
	51	5
	52	5
22252-000260	30	11
22312-030180	16	6
22312-040080	44	18
	45	18
22312-080160	1	8
	21	5
	22	5
22322-030160	16	8
22322-030200	45	11
22351-030012	45	13
22351-040008	1	10
	25	11
	44	17
	45	17
22351-040010	15	16
22414-250150	51	6
	52	6
22451-100000	49	9
22512-050340	19	7
	20	7
22512-070120	21	6
		7
	22	6
		7
22522-030100	25	12
22724-800380	31	5
	57	2
23000-016000	42	9 -1
23000-022000	31	3
	32	4
		7

Parts No.	Fig. No.	Ref. No.
23000-022000	34	2
		2 -1
		6
23000-025000	34	3
		7
23010-014000	71	7
23061-070200	1	20
23080-018000	69	3
		3 -1
23341-060000	42	4
	43	4
23414-060000	49	10
23414-080000	2	18
	29	14
	37	5
	42	18
		19
	43	18
		19
	85	12
23414-080012	37	5 -1
	39	10 -1
	40	10 -1
	43	18 -1
		19 -1
23414-100000	85	13
23414-120000	29	4
		9
	42	20
		21
	43	20
		21
	85	14
23414-120016	3	4 A
23418-060000	39	8
	40	8
23418-080000	39	10
	40	10
23857-060000	42	22
	43	22
23876-010000	27	7 -1
23887-120002	3	4 B
23887-180002	4	2
		2 -2
		5
		8
		8 -2
	5	3
24101-060004	30	12
24101-060054	2	10

Parts No.	Fig. No.	Ref. No.
24101-060054	19	8
	20	8
24166-254202	44	6 -1
24311-000070	16	7
	50	6
24311-000090	46	6
	47	6
24311-000150	49	18
24321-000350	2	14
	30	15
	85	15
24341-000260	15	37
24341-000440	39	6
	40	6
26013-060102	17	6
26013-060122	41	3
26013-060162	39	12
26013-060182	40	12
26013-060302	44	19
	45	19
26013-060322	66	22
26013-080142	60	6
		13
		19
	61	2
26013-080202	6	6 -1
26013-100252	4	9
26013-120282	12	4
26013-120302	10	5
	11	5
26106-060102	51	9
	52	9
26106-060122	1	16
	14	4
	48	3
	63	2 -1
26106-060142	51	12
	63	2
		8
26106-060182	3	6
	30	16
26106-060202	7	3
	33	5
26106-060322	3	7
26106-060502	2	6
26106-060802	2	7
26106-080142	9	2
	58	5
26106-080162	40	13
	59	5

Parts No.	Fig. No.	Ref. No.
26106-080182	6	6
26106-080202	39	13
	56	6
	87	7
26106-080282	60	7 -2
26106-080302	56	7
26106-080352	27	9
26106-080402	60	7
		14
	87	8
26106-080452	60	7 -1
		14 -1
26106-080752	87	9
26106-081202	56	8
26106-100252	4	3
		6
	10	6
	11	6
	12	5
26106-100302	5	2
	54	4
26106-100322	62	4
		9
	73	2
		2 -1
	74	3
		3 -1
	75	2
		2 -1
26106-100602	56	9
	87	10
26113-040082	30	14 -1
26113-100352	62	9 -1
26116-050128	50	7
26213-080182	18	3
26216-060162	37	7
26216-080222	2	3
26216-080652	15	14
26226-120252	55	3
26306-080002	2	4 -1
	15	15 -1
	46	7 -1
	56	10 -1
	87	11
26366-060002	50	9
	87	12
26366-080002	2	4
	15	15
	46	7
	47	7

Parts No. Index

Parts No.	Fig. No.	Ref. No.
26366-080002	56	10
26450-050102	19	10
26450-060182	25	15
26450-080282	75	3
		3 -1
26554-040062	30	13
26554-040082	30	14
26557-040082	7	7
26557-040122	68	18
26557-050122	51	7
	52	7
	63	5
		11
26557-050142	68	14
26557-050202	63	5 -1
26557-060102	2	12
26587-080122	19	9
	20	9
26606-100002	15	12 -1
26656-080002	16	10
26657-080002	16	10 -1
26703-080002	15	19
	18	5
26706-100002	15	12
	62	5
		10
	73	3
		3 -1
	74	4
		4 -1
	75	4
		4 -1
26716-050002	64	10
	78	8
		12
	80	9
	81	8
		12
26716-060002	37	8
26716-120002	13	6
	55	4
26716-160002	83	16
26756-050002	50	8
26756-060002	48	4
	49	11
26756-080002	1	18
	14	6
	15	28
	54	5
	62	3

Parts No.	Fig. No.	Ref. No.
26756-080002	62	8
26756-120002	49	12
26776-120002	25	13
26776-180002	21	12
	22	12
27210-200200	1	17
	14	5
	84	19
27241-200000	1	9
27310-070001	15	8
27730-301400	77	1 -1
28110-100130	65	3
		18
28110-120140	65	4
		19
28110-170190	65	5
		20
28110-220240	65	6
		21
28110-270300	83	18
28150-040000	83	19
28150-050000	83	20
28210-000031	83	21
28210-000070	83	22
28210-000080	69	1
		1 -1
28312-200750	83	23
41710-000380	77	1
41710-000410	51	10
	52	10
	63	3
		9
41730-000680	76	2
41730-000681	76	2 -1
42222-003550	8	10
43400-500390	42	15
	43	15
	85	16
43400-500410	16	11
43400-500450	49	13
	85	17
43400-500570	27	3
	85	18
43662-010030	31	1
43662-010031	31	1 -1
43666-020951	31	4
45414-500260	74	1
		1 -1
46150-001110	64	6
	78	5

Parts No.	Fig. No.	Ref. No.
46150-001110	80	6
	81	5
46150-003680	58	2
	59	2
	84	20
48110-025063	62	6 -1
48110-032411	62	2
		7
	74	2
		2 -1
48110-522361	62	1
		6
705311-22500	23	3
	84	4
705311-23600	24	5
711100-51540	35	19
	36	19
724550-51520	35	18
	36	18
724772-92100	65	1
		16
728170-01540	3	1
728170-01541	3	1 -1
728170-01610	2	1
728170-01611	2	1 -1
728170-02500	6	1
728170-11650	15	23
728170-11700	15	1
728170-32100	25	1
728170-32500	25	3
728170-35800	27	5
728170-53100	38	1
728170-61560	44	8
	45	8
728171-01560	1	1
728171-01561	1	1 -1
728171-21700	21	1
	22	1
728171-23100	24	1
728171-51100	35	1
728171-92600	85	1
728171-92601	85	1 -1
728173-51100	36	1
728270-92400	83	1
728270-92401	83	1 -1
728277-53100	38	1 -1
83213-003012	71	1
947859-20010	70	13
977780-01210	90	1
		1 -1

Parts No.	Fig. No.	Ref. No.
977780-01211	91	1
977780-01230	90	2
977780-01250	90	3
977780-03000	90	9
	91	9
977781-00121	89	1
		1 -1
977781-00123	89	2
977781-00125	89	3
977782-00122	70	1
		1 -1
X0044021500	89	7
X0044021509	89	6
	90	7
	91	7
X0318101004	91	2
X158606410X	91	3
X17910000XX	89	4
X179100021X	90	5
X179100022X	91	5
X179100100X	89	5
	90	6
	91	6
X199903800X	89	8
	90	8
X199906101X	91	8
X211413005	66	8
X211415006	66	14
X211423001	67	8
X21142835	66	21
	67	21
X21143215	66	6
X211433101	66	10
X21143454	67	13
X21143963	67	17
X211443101	67	10
X21144314	66	12
	67	12
		12 -1
X21144454	66	13
X211445002	67	14
X21144661	66	16
	67	16
X211447006	67	19
X211447009	66	19
X211451005	66	2
X21145312	66	7
	67	7
X21145352	66	9
	67	9

Parts No. Index

Parts No.	Fig. No.	Ref. No.
X211462101	66	5
X21146815	67	20
X21146963	66	17
X21147155	66	4
	67	4
X21147215	67	6
X211476503	66	15
X21148110	66	3
	67	3
X211482001	67	5
X21148313	66	11
	67	11
		11 -1
X211486003	67	15
X21148652	67	18
X21148852	66	20
X211491001	67	2
X21149652	66	18
X418500100X	89	9
X6201SD	68	3
X6302BM	68	17
X7120632	67	22
X8636008003	90	4
X8636015001	91	4
X9490561001	88	2
	96	2
XB495469B	68	22
XBP1901300	70	4
XBP1901820	70	8
XBP1901830	70	9
XBP1901910	70	10
XBP1901920	70	11
XBP1901950	70	12
XBP1902200	70	3
XBP1902400	70	5
XBP1902810	70	7
XBP1905500	70	6
XL12013262	68	10
XL1254801	68	20
XL1255801	68	21
XL13513134	68	13
XL13513152	68	8
XL13514042	68	16
XL1352318	68	11
XL13525001	68	19
XL1353320	68	7
XL13542001	68	4
XL1354326	68	9
XL13561001	68	2
XL13563003	68	5

Parts No.	Fig. No.	Ref. No.
XL1358301	68	6
XL1359400	68	15
XL13595003	68	19 -1
XTR1Z63	68	12

Parts No.	Fig. No.	Ref. No.

Parts No.	Fig. No.	Ref. No.